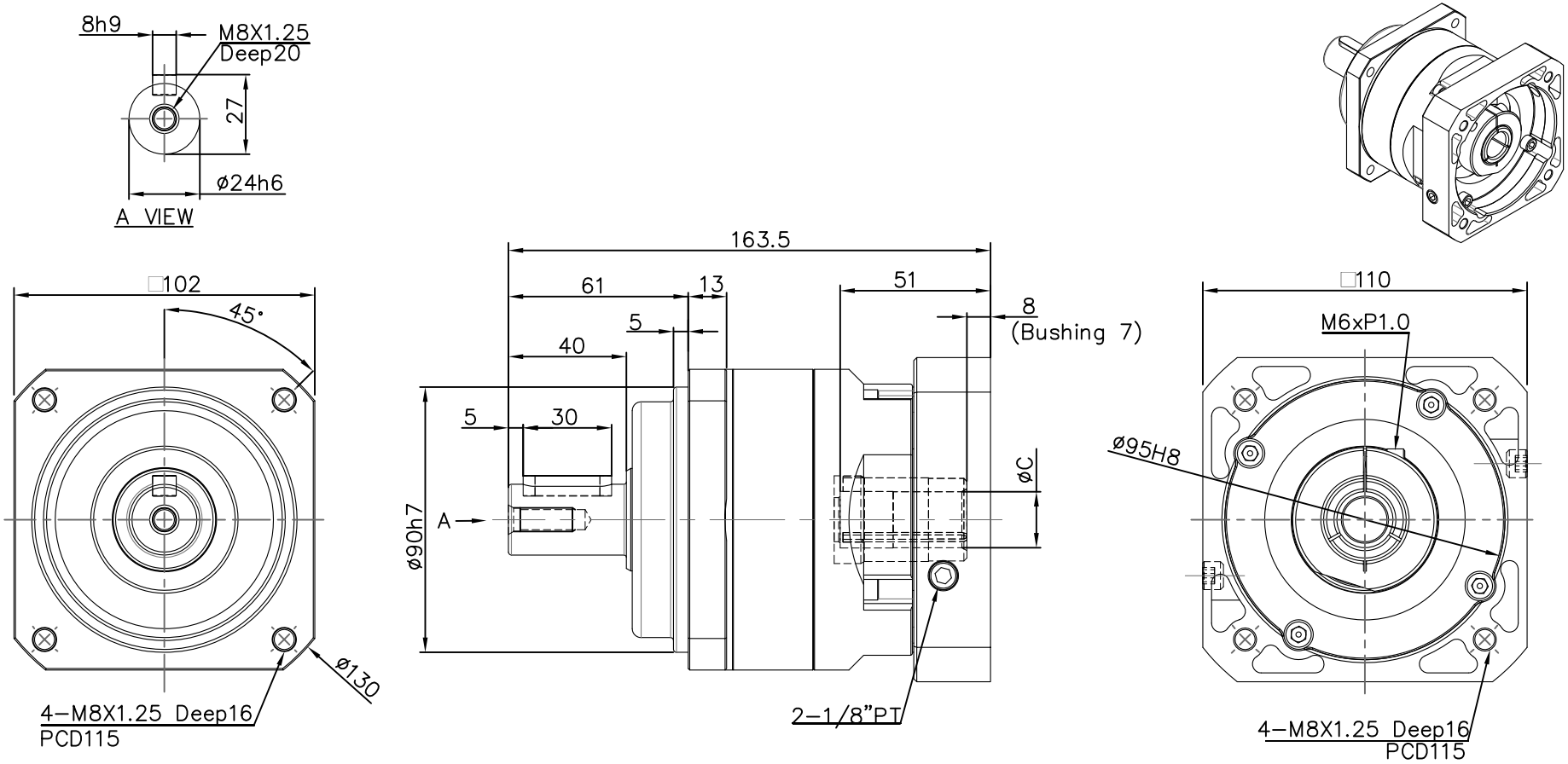

NOTES.

1. Match Motor Flange: ϕ 95
2. Output shaft have keyway, without keyway is optional.
3. Bushing is supplied to input bore ∅10, ∅12.7, ϕ14, ϕ16, ϕ19 or ϕ22
4. ϕC=ϕ19 or ϕ24.

MODEL	段數 (Stage)	減速比 (Ratio)	背隙 (Arcmin)	匹配馬達出軸直徑&長度
PA100-C0038D2245	單段	3	8	22 & 45
PA100-C0048D2245	單段	4	8	22 & 45
PA100-C0058D2245	單段	5	8	22 & 45
PA100-C0078D2245	單段	7	8	22 & 45
PA100-C0108D2245	單段	10	8	22 & 45

Ration Application	3,4,5,7,10
Power Application	400W~1.5KW

台達電子工業股份有限公司
DELTA ELECTRONICS, INC.

Drawn:

Design:

THESE DRAWINGS AND SPECIFICATIONS ARE THE PROPERTY OF DELTA ELECTRONICS, INC. AND SHALL NOT BE REPRODUCED OR USED AS THE BASIS FOR THE MANUFACTURE OR SELL OF APPARATUSES OR DEVICES WITHOUT PERMISSION.

THIRD ANGLE PROJECTION

Description: Planetary Gearhead Servo Box

DIMENSIONAL TOLERANCES HOLES : ±0.05 ANGLES : ±0.5°

( )		( )		( )		( )	
<30	: ±0.25	DECIMALS		UP~100	: ±0.2	250~300	: ±0.4	UP~600	: ±1.5
>30~100	: ±0.35	X	: ±0.3	100~150	: ±0.25	300~350	: ±0.45	600~900	: ±2.4
>100~300	: ±0.5	X.X	: ±0.2	150~200	: ±0.3	350~400	: ±0.5	900~OVER	: ±3.1
ABOVE 300	: ±0.6	X.XX	: ±0.1	200~250	: ±0.35				

A3 SIZE

Part No.

REV. X0

SCALE | UNIT mm | USED ON Planetary Gearhead | SHEET OF | ISSUE DATE:

FRAME NAME: DF-MEA3H-1R01.DWG