SHIMPO

High Precision Gear Technology

Improving the Speed of Industry

A Nidec Group Company

SHIMPO

Letter from the President

The NIDEC-SHIMPO Corporation was originally founded in Kyoto Japan in 1952. Since our inception, we have made every possible effort to improve our manufacturing skill and capabilities, including the advancement of power transmission products to support new technologies and markets. NIDEC-SHIMPO initially established an industry-wide leadership position in the area of mechanical variable speed drives. We are very proud of our storied past with mechanical drive technology, through which NIDEC-SHIMPO helped contribute to the growth of the emerging industries that are now the cornerstone of our world economy today.

Over time, within the field of power transmission engineering, NIDEC-SHIMPO has maintained the highest level of skill and production quality throughout the industry. We have earned a reputation as a long term dependable partner to our customers, and this solid reputation is firmly supported by the many industrial awards we hold, such as the Japanese Machinery Society Award, and Deming Award, among others.

Today, the growing global market for motion control has focused a significant share of our time and energy towards providing higher precision solutions for our customers. This effort has led to the development of our ABLE product line, a complete offering of high-precision planetary speed reducers specific to servo-motor applications. This catalog provides in-depth technical details and specifications for the full ABLE product line.

NIDEC-SHIMPO promises to continue to provide high precision power transmission products at unmatched value, which solve the new requirements of our customer base and allow them to be competitive in an increasingly tough global market. Within our company, we have coined this promise as "Enduring Process of SHIMPO" - a pledge by our employees to approach all of their day-to-day work activities with full effort, full dedication, and full energy to support the evolving needs of our customers.

Your continued support and loyal patronage to our company is highly appreciated. Thank you for your time.

Best Regards,
President
T. Nishimoto

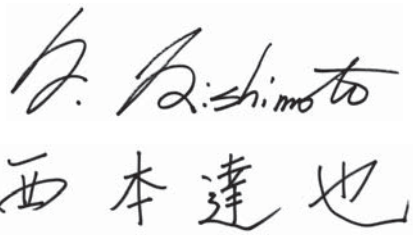

Please take 30 seconds to register your catalog. Every 500th Registrant will receive an award from SHIMPO.

Table of contents

Company Overview 2-13

VRSF-Series 14-31
Planetary Inline Configuration
Economy class
(NEMA output dimensions, refer to page 30-31)

VRL-Series 32-79
Planetary Inline Configuration
General purpose
(Food/washdown options, refer to page 36-37)

VRB-Series 80-125
Planetary Inline Configuration
General purpose, simple mount

VRS-Series 126-171
Planetary Inline Configuration
Highest radial, axial load capacity

VRT-Series 172-223
Planetary Inline Configuration
Compact, ISO flange mount

NEV-Series 224-243
Right-angle Configuration
Economy class

EVL-Series 244-283
Planetary Right-angle Configuration
General purpose

EVB-Series 284-323
Planetary Right-angle Configuration
General purpose, simple mount

EVS-Series 324-369
Planetary Right-angle Configuration
Highest radial, axial load capacity

STH-Series 370-377
Hollow Output Rotary Actuator
Great moment load, general duty

STR-Series 378-407
Hollow Output Rotary Actuator
Highest moment load, "zero" backlash

ER-Series 408-417
Inline Configuration
Extreme shock load situations

Technical Information 418-429

Commercial Information 430-440

NIDEC Corporation

With annual sales exceeding $8 Billion for the fiscal year 2011, the NIDEC Corporation has become the world's dominant provider of small precision, mid-size motors and related drive technologies. Founded in 1973 by current Chairman of the Board and CEO, Shigenobu Nagamori, the NIDEC Corporation has built a portfolio of motor variety that is far reaching and impacts all of us during our daily routine. Regardless if its hard disk drive motors, fan motors for appliances, or automotive related, NIDEC Corporation provides the motor and drive technology that help keep our world moving forward.

Corporate Headquarters
Kyoto, Japan

Share Listing
New York Stock Exchange
Tokyo Nikkei Stock Exchange

Bond Rating
JCR: A+
R&I: A+

Under the NIDEC Group umbrella there are more than 150 corporate subsidiaries spanning the globe. A consolidated group would total more than 100,000 employees that are supplying products and services to customers in more than 150 countries. The NIDEC Group companies can be categorized into the following complementary business segments;

Sales by Product Group (FY2012)

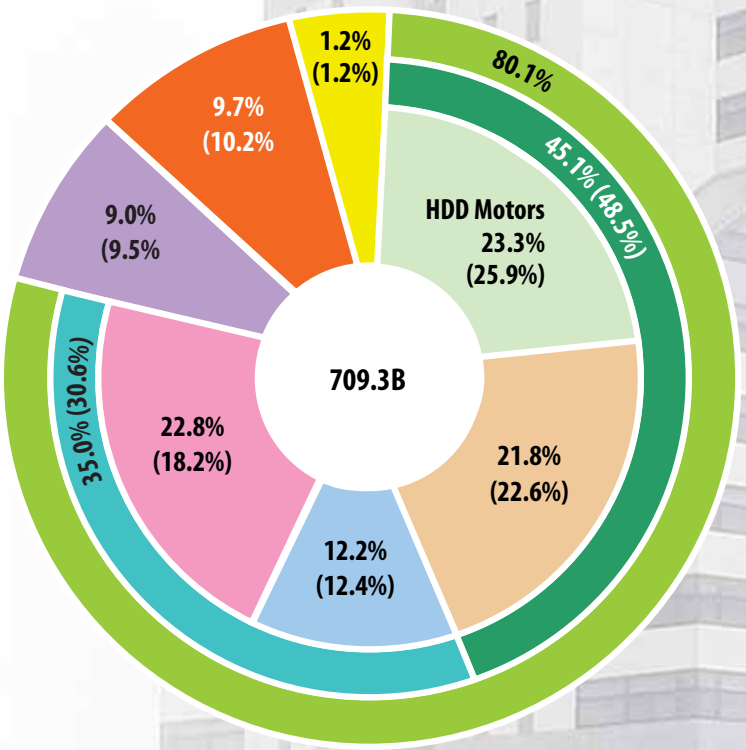

Motors:

Automotive, Appliance, Commercial & Industrial Products
Motors for automobiles, home electronic appliances and industrial equipment

Small Precision Motors

HDD Motors

Other Small Motors
Optical disk drive motors, OA equipment motors, polygon scanners, MPU cooling fans, game machine fans, PC/communications fans, home appliance fans, automobile fans, vibration motors, brush motors, stepping motors, actuator units

Auto
Vibration motors, brush motors, stepping motors

Appliance Commercial Industrial
Game machine consoles, MPU cooling fans, PC/communications devices, home appliances, automobiles

Machinery:
Industrial robots, card readers, circuit board testers, high-speed pressing machines, chip mounters, measuring equipment, power transmission equipment, factory automation system

Electronic & Optical Components:
Camera shutters, switches, trimmer potentiometers, processing, precision plastic mold products

Others:
Logistics and services, musical products

The NIDEC Group has numerous manufacturing plants across the globe including their own industrial park near Shanghai, China where many of the group companies have located their primary production operations. NIDEC Corporation maintains motor research laboratories in Kyoto, Shiga, and Nagano Japan in order to remain in the forefront of precision and mid-size motor technology.

The NIDEC Corporation continues to expand its portfolio in "all types of motors" and maintain its leadership position through aggressive product development and global acquisitions. The corporate slogan – **All for Dreams** - coined by founder Shigenobu Nagamori himself, epitomizes the NIDEC Group spirit and the promise to continue to deliver on the high value products and technologies that make our dreams possible.

We begin with dreams.
Dreams drive our motivation.
Dreams are our future.
The world's dreams, people's dreams, our dreams.
Our passion creates ideas that make dreams come alive.
Technology and products that were only dreams become reality.
All for dreams
Dreams challenge and the Nidec-Group
will continue to meet the challenge.
For the world's tomorrow,
we will develop the world's first technologies and provide the world's best products. We will continue our part in creating a better society.

NIDEC-SHIMPO

NIDEC-SHIMPO has established itself over time as a leading supplier of drive technology and precision power transmission solutions to the industrial marketplace. Created in 1952, SHIMPO located its corporate headquarters and main production facility in Kyoto, Japan. With traditional roots that began imbedded in the development of mechanical variable speed powertrains, SHIMPO grew into a more diverse manufacturer of high precision and heavy duty power transmission products.

In 1994 the company was acquired by the NIDEC Corporation, and became formally known as NIDEC-SHIMPO. NIDEC-SHIMPO began to focus on the higher volume production needs that industry demanded as the global motion control and servo motor market grew at an accelerated rate. Soon after that ground was broken for NIDEC-SHIMPO's state-of-the-art manufacturing facility in Ping Hu China, approximately two hours outside of Shanghai.

Today NIDEC-SHIMPO is producing more than 30,000 servo motor speed reducers per month out of its Ping Hu facility. More impressive than the volume put forth is the consistent level of high quality attained. With the marketplace continuing to demand higher levels of precision, NIDEC-SHIMPO continues to push forward in the development of high quality, dependable products to meet those specifications, and at a price point that allows customers to be competitive in the global arena.

Sales and Distribution Network

NIDEC-SHIMPO has distribution channels that span the globe with stocking and service locations throughout Asia-Pacific, Europe, and the Americas – in total more than 30 locations. Within the Americas, NIDEC-SHIMPO has established its main headquarters in the Chicago, Illinois area. This location has been supporting the North America market for more than 30 years.

Recently, NIDEC-SHIMPO America implemented a kit build assembly program within its Chicago, Illinois location. The kit build program allows NIDEC-SHIMPO to provide a large variety of frame sizes and ratios within 48 hours for customers. The kit build program provides product variety, availability, and flexibility (minor customization of product) that are unmatched within the industry.

New offices and stocking points have been added in Mexico (Monterrey, Queretaro), and a subsidiary established in Brazil (Sao Paulo) to serve the expanding motion control needs of emerging markets in Latin and South America.

NIDEC-SHIMPO America has built a solid engineering and customer support infrastructure, sales and distribution network, and inventory program that have it poised to grow aggressively in the next few years. The goal, to obtain a level of brand awareness and a dominant marketshare position similar to that established by the SHIMPO brand name in the Asia Pacific region, looks very well within reach.

NIDEC-SHIMPO'S ultimate goal is to provide the highest quality of products and level of service to our customers throughout the world. To support the needs of a constantly expanding and evolving global economy, we continue to invest heavily in extending the footprint of our support network and distribution channels.

Today, NIDEC-SHIMPO has more than 2,000 employees with a presence across five continents. We continue to expand and improve our global capabilities in order to better serve the needs of our OEM customer in an increasingly competitive environment.

Global Connections

Americas

- ✸ Chicago
- Monterrey
- Querétaro
- São Paulo

Asia-Pacific

- ✸ Kyoto (Headquarters)
- Taiwan
- Seoul
- Beijing
- Shanghai
- Pinghu
- Xianggang
- Singapore
- India-Bangalore

Unmatched Quality

The spirit of challenge is basic to the NIDEC-SHIMPO culture, influencing all aspects of product development, manufacturing, and servicing our customers. All of us at NIDEC-SHIMPO, as a team, swiftly start taking action toward our goals. The practice of challenging each individual employee has helped drive and cultivate the creative ideas behind the state-of-the-art technology within our power transmission products. NIDEC-SHIMPO and its employees place quality control on a pedestal and consider it to be the ultimate goal – an ongoing challenge, where we seek continuous improvement at levels previously thought unattainable.

In 1969 NIDEC-SHIMPO received "The Deming Award" for our outstanding quality control based on the Total Quality Control (TQC) Method. Since that time, NIDEC-SHIMPO's desire to avoid causing any inconvenience to our customers, due to inferior product or service, has steered us towards internalizing a unique statistical Quality Control procedure across all departments and functional teams. Our rigid Quality Control program influences all aspects of production such as the sales and order processing activities, the design and resource allocation stages, manufacturing, and logistics. By instilling the Deming Cycles – ***Plan***, ***Do***, ***Check***, ***Action*** – deep within our company culture, NIDEC-SHIMPO is manufacturing products that exceed our customer's needs and specifications at a lower cost, faster delivery, and better service when benchmarked against any of our major competitors.

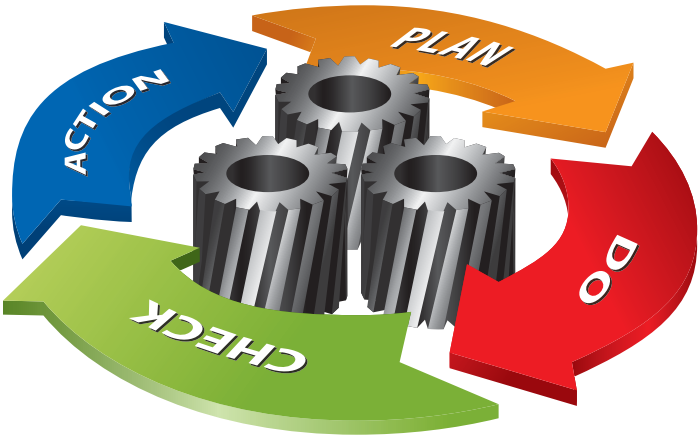

Regardless if the reducer is manufactured at our main facility in Asia or assembled at our Kit Build Center in the United States, all products will be tested with the same stringent quality control procedures and tests. Lot testing a few samples, like some of our competitors do, was never an option for NIDEC-SHIMPO.

NIDEC-SHIMPO holds certification for ISO 9001 and 14001. We took the certification process very seriously, realizing that NIDEC-SHIMPO must achieve global ISO standards in order to build our brand awareness and establish credibility abroad where

STATE-OF-THE-ART TECHNOLOGY

our presence in the local market is still fairly undeveloped. Our ISO Registration is the following;

ISO 9001 Compliance in the following activities

Design, development, manufacturing, and service (repair) of the following products,

- Planetary Speed Reducers
- Mechanical Variable Speed Drives
- Handheld Instrumentation (Digital Tachometers, Stroboscopes)
- Digital Controllers

ISO 9001
ISO 14001

ISO 14001 Compliance in the following activities

All design, development, manufacturing, and repair services at our main manufacturing facility, and at our Corporate headquarters.

In conclusion, NIDEC-SHIMPO will continue to challenge itself and our individual employees while striving for greater levels of product quality and services. It is a daunting challenge, as the incremental gains in quality become smaller and smaller and much harder to achieve. However, the challenge is ingrained within the spirit of each NIDEC-SHIMPO employee. This ***Do It Now!*** and ***Follow Through!*** attitude exhibited by our employees helps create superior products for the global marketplace.

Manufacturing Strength and Capabilities

As mentioned previously, NIDEC-SHIMPO has a state-of-the-art manufacturing plant located about 40 miles south of Shanghai in an industrial park in the Zheijang province. The industrial park is the home to more than 20 NIDEC Group Company manufacturing plants, making NIDEC a very important employer for the local community. NIDEC is one of the first Japanese corporations to focus on establishing local manufacturing capabilities and a strong supply chain networks in China, as an important part of their strategy.

The primary NIDEC-SHIMPO manufacturing facility is now producing more than 30,000 reducers a month. The plant has achieved large scale production and economies of scale that is a major advantage over our competitors. This manufacturing strength allows NIDEC-SHIMPO to provide unmatched value to our OEM customers, helping them to compete in a very price competitive global market.

NIDEC-SHIMPO has been very successful over the past decade at bringing new high performance and high quality products to the market. We have developed a core competency at quickly developing products and applying our know-how to efficiently scale-up a manufacturing process from bench testing to large volume production. We promise to leverage this intrinsic skill set in order to continue to push the product development envelope and provide even higher performance, cost-effective products to our customers.

Quality Control Program

Our high-volume and cost effective manufacturing capabilities would be meaningless if we did not have the appropriate quality control program in place. NIDEC-SHIMPO takes great pride in our product quality, and we have implemented numerous tests and metrics in order to insure our products exceed our customers' expectations.

Every reducer that leaves our manufacturing plant undergoes a series of performance tests before it's cleared for shipment. It is not satisfactory for NIDEC-SHIMPO to simply conduct lot testing. Each reducer is tested under extreme duty cycle and duration simulated environments. The program includes the following tests – Noise Measurement, Continuous Load Testing, Shock Load Testing, and a Backlash Measurement Check. Besides final assembly performance testing, a quality control program is in place for any raw materials entering our manufacturing plant. This testing at the front end of our production process is crucial, and our quality inspections at the point-of-entry are as stringent as any testing done throughout our manufacturing process.

Americas Kit Assembly Center

In 2011, NIDEC-SHIMPO AMERICA launched a kit build program at their Itasca, IL facility to serve the North American market. The new Kit Build Center allows NIDEC-SHIMPO to quickly assemble a larger variety of high-precision planetary reducers, which surpasses all competition. The Kit Build Center can assemble any inline series (VRL, VRB, VRS) of reducers in most major ratios within a 2 to 4 day period. The larger frame sizes, especially the right-angle products are shipped from Japan within a 4 week period.

The Kit Build Center tests every assembled planetary reducer to make sure all performance specifications are met. The battery of tests includes load testing, noise measurement, and backlash measurement, the same tests run by our manufacturing facility. The new Kit Build Center provides an excellent, quick, turn-around solution for Distributors working on single projects, OEMs requiring prototype units for test, and basic aftermarket support where required.

For more information about the Kit Build Center in North America, please contact your local NIDEC-SHIMPO sales office. Take advantage of the quick turn-around time in order to stay out in front of your competition. Contact NIDEC-SHIMPO today!

The Kit Assembly Cycle

The kit assembly cycle requires clear communication and coordination between all parties involved at every stage of the cycle. If quality control is slighted at any stage, the kit assembly program will not maintain the high-level of performance our customers expect from our products. At every stage, NIDEC-SHIMPO makes efficient communication and stringent control procedures priority number one.

Gear Reducer Selection Overview

Product Series		**VRSF**	**VRL**	**VRB**	**VRS**	**VRT**	**ER**
Catalog Page		14	32	80	126	172	408
Axis of Orientation		Coaxial	Coaxial	Coaxial	Coaxial	Coaxial	Coaxial
Gear Description		Planetary helical	Planetary helical	Planetary helical	Planetary helical	Planetary helical	Cycloidal
Frame	Smallest	B (60mm)	070	060	060	064	B03
	Largest	E (170mm)	235	220	240	285	F07
	Variety	4	6	6	7	7	10
Ratio	Minimum	3	3	3	3	4	11
	Maximum	81	100	100	100	100	71
	Variety	9	22	22	22	19	7
Installation							
Rounded, Tapping Holes on Casing			■				
Square, Through Holes on Casing		■		■	■		
Rounded, Through Holes on Casing						■	■**
Lubrication							
Grease		■	■	■	■	■	■
Oil							■
Input							
Direct Clamp		■	■	■	■	■	■
Keyed Shaft							■
Output							
Smooth Shaft with Tapping Hole		■	■	■	■		
Shaft with Tapping Hole and Keyway		■	■	■	■		
Flanged Connection						■	■**
Flange with Hollow Bore							
Bearing Type on Output							
Ball Bearing		■	■	■		■	■
Tapered Roller Bearing					■	■	■
Cross Roller Bearing							
Performance Specification							
Radial Load			Ordinary	Ordinary	Excellent	Excellent	Ordinary
Thrust Load			Ordinary	Ordinary	Excellent	Excellent	Ordinary
Backlash Rating	< 1 arc-min						
	≤ 2 arc-min						
	≤ 3 arc-min	■		■	■	■	
	≤ 5 arc-min	■	■				
	≤ 6 arc-min						■
	≤ 8 arc-min						
	≤ 9 arc-min						
	≤ 10 arc-min						
	≤ 11 arc-min						
	≤ 15 arc-min	■					
	≤ 30 arc-min						
Torsional Rigidity		Ordinary	Ordinary	Ordinary	Excellent	Excellent	Excellent
Efficiency		Excellent	Excellent	Excellent	Excellent	Excellent	Excellent

Product Series		**NEV**	**EVL**	**EVB**	**EVS**	**STH**	**STR**
Catalog Page		224	244	284	324	370	378
Axis of Orientation		Right-angle	Right-angle	Right-angle	Right-angle	Off-set rotary stage	Right-angle
Gear Description		Planetary helical	Spiral bevel/Planetary	Spiral bevel/Planetary	Spiral bevel/Planetary	Planetary w/ Rotary stage	Roller gear /cam mechanism
Frame	Smallest	B (60mm)	070	060	060	052 (B frame)	040
	Largest	E (170mm)	235	220	240	078 (C frame)	240
	Variety	4	6	6	7	2	7
Ratio	Minimum	3	3	3	3	12	15
	Maximum	81	100	100	100	324	Various*
	Variety	9	22	22	22	9	Various*
Installation							
Rounded, Tapping Holes on Casing			■				
Square, Through Holes on Casing				■	■	■	■*
Rounded, Through Holes on Casing		■					
Lubrication							
Grease			■	■	■	■	■
Oil							
Input							
Direct Clamp		■	■	■	■	■	■*
Keyed Shaft							
Output							
Smooth Shaft with Tapping Hole		■	■	■	■		
Shaft with Tapping Hole and Keyway		■	■	■	■		
Flanged Connection							
Flange with Hollow Bore		■				■	■
Bearing Type on Output							
Ball Bearing		■	■	■			
Tapered Roller Bearing					■		
Cross Roller Bearing						■	■
Performance Specification							
Radial Load		Ordinary	Ordinary	Ordinary	Excellent	Ordinary	Excellent
Thrust Load		Ordinary	Ordinary	Ordinary	Excellent	Excellent	Excellent
Backlash Rating	< 1 arc-min						
	≤ 2 arc-min					■	
	≤ 3 arc-min						
	≤ 5 arc-min					■	
	≤ 6 arc-min		■	■	■		
	≤ 8 arc-min						
	≤ 9 arc-min		■	■	■		
	≤ 10 arc-min					■	
	≤ 11 arc-min						
	≤ 15 arc-min						
	≤ 30 arc-min	■					
Torsional Rigidity		Ordinary	Ordinary	Ordinary	Excellent	Ordinary	Excellent
Efficiency		Excellent	Excellent	Excellent	Excellent	Excellent	Ordinary

NOTE: *(STR) motor connection to VRB/EVB reducer **(ER) several mounting styles available

SHIMPO ABLE Gear Reducers

Industrial Areas of Expertise

Machine Tool and Metal Forming

A selection of robust and durable speed reducers, both planetary and cycloidal, for heavier duty or high shock load applications. Many choices for the different levels of precision, torque ratings, and mounting options required on the different axes of movement.

Custom Assembly and Test Automation

A wide variety of frame sizes and ratios are available for immediate delivery to solve any inertia matching application within turn-key projects. The hollow-bore rotary products and planetary reducers with high torsional rigidity characteristics are ideal for many indexing applications.

Packaging and Filling Machinery

An assortment of inline and right angle speed reducers at different price points, depending on the specifications needed. For the OEM, this provides ideal, cost-effective, gear reduction solutions for exported packaging equipment or applications where you are transitioning from induction motor or hydraulics to servo motor technology.

Printing and Converting Equipment

Our reducers are designed to minimize the heat generated, and they are therefore capable of operating at higher speeds and within continuous duty environments. An assortment of size and ratio combinations are available that allow proper selection to maximize operating efficiency for varying cycle speeds.

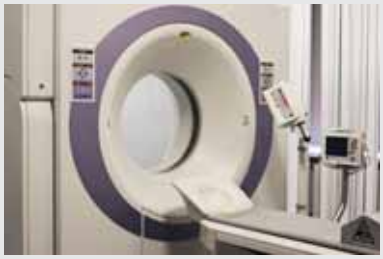

Medical and Health Care Related Systems

We offer extremely accurate positioning characteristics and high quality gear reducers that maintain a level of performance consistency required in medical applications. Our inline speed reducers are ideal for commercial equipment applications involving pumping, mobile equipment, and smooth positioning.

Semiconductor and Circuit Manufacturing

A broad offering of high precision, clean room friendly planetary and hollow-bore rotary reducers that are preferable over belt drives and other reduction methods that can introduce contamination. Custom coatings and materials are available for OEM applications when necessary for corrosive chamber environments and different clean room classifications.

VRSF-SERIES

The intelligent selection for a higher performance planetary gearbox at an ultimate value for standard duty motion control applications. The VRSF utilizes a lightweight aluminum frame, helical cut gear, and bearing span that provides the best level of precision and torque carrying capacity in its competitive class. The noise level generated by the VRSF is greatly reduced in comparison to any other competitor's economy class series that relies on spur gearing. The VRSF can be selected with one of three backlash levels – Standard backlash at 15 arc/min, Reduced backlash at 5 arc/min, and Precision backlash at 3 arc/min.

The series is available in four frame sizes (B, C, D, E) which has a peak output torque of 91 Nm across a variety of ratios. The VRSF is the ideal choice for OEMs manufacturing in larger volume and where accuracy is important and duty cycle is not overly extreme. The VRSF has been very popular in applications such as mobile robotics, standard packaging machinery, medical equipment, and other types of enclosed food processing applications.

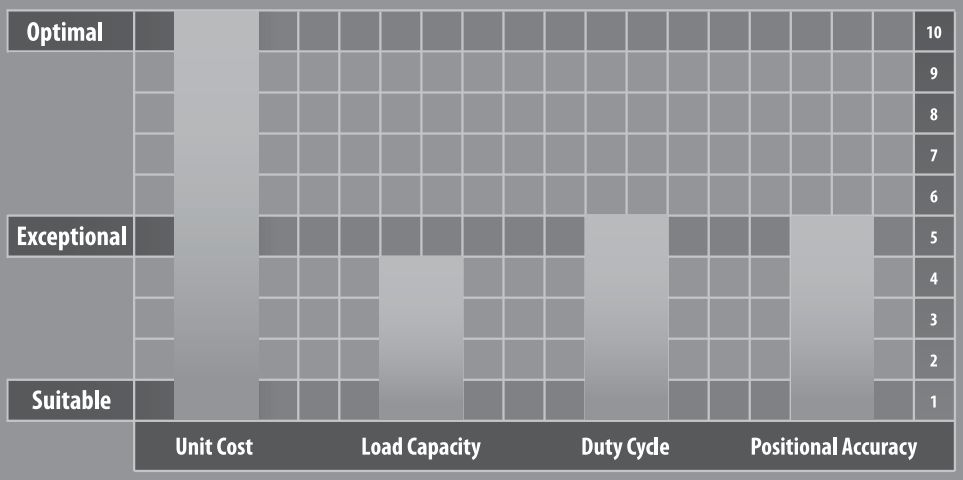

VRSF-SERIES

- Quiet operation: Helical cut gears contribute to reduced vibration and noise
- Different precision levels available in order to choose the best fit and value
- High rigidity & torque: Rigidity and torque capacity are achieved by using uncaged needle roller bearings
- Adapter bushing connection: Enables a simple, effective attachment to most servo motors
- Extremely light weight aluminum body to reduce excess weight from your equipment
- Additional features include NEMA output flange options

VRSF-Series– Features

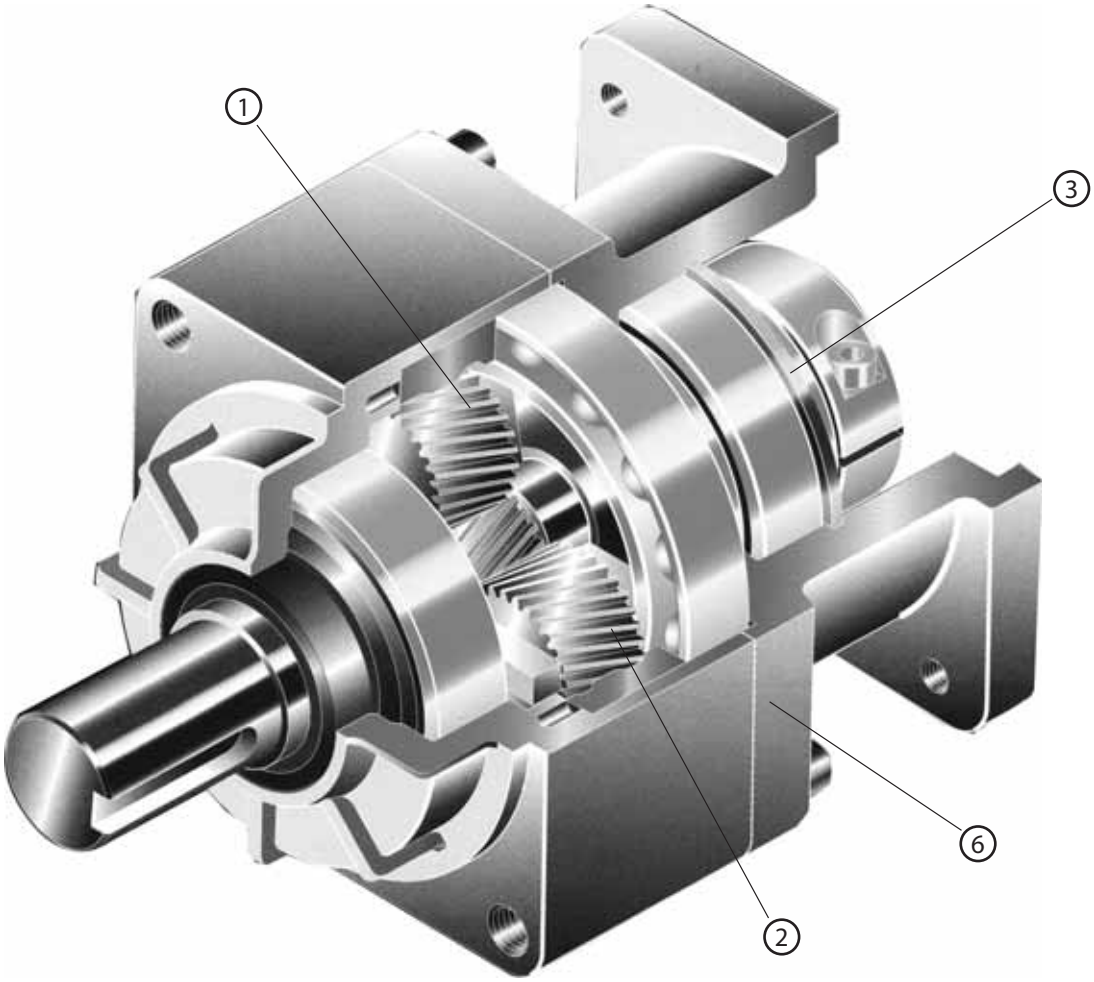

1. High-precision with backlash 0.05° (three arc-minutes), Low-backlash 0.08° (five arc-minutes) or less certified
2. Smooth rotation and less pulsation due to utilizing helical gearing
3. Maintenance free with long-life grease, the sealed structure allows for mounting in any orientation
4. Every possible countermeasure against oil leakage taken: Including impregnation of the case and air leak test
5. IP65 rating extremely popular in washdown and food grade environments
6. Various optional features allowed, such as different coatings, plating, and grease varieties

VRSF-Series – Model Code

VR	S	F	-		-	15	C	-	19HB16

- Mount code (*1)
- Reducer frame size: B, C, D, E
- Ratio
  - 1stage: 3, 5, S9
  - 2stage: 15, 20, 25, 35, 45, 81
- Backlash specification
  - Symbol: Standard
  - PB: High-precision
  - LB: Low-backlash

Backlash*

Frame Size	VR-□ (Standard)	VR-LB (Low-Backlash)	VR-PB (High-Precision)
B frame	0. 25°(15 arc-minutes)	0. 166°(10 arc-minutes)	0. 05°(3 arc-minutes)
C frame	0. 25°(15 arc-minutes)	0. 08°(5 arc-minutes)	0. 05°(3 arc-minutes)
D frame	0. 25°(15 arc-minutes)	0. 08°(5 arc-minutes)	0. 05°(3 arc-minutes)
E frame	0. 25°(15 arc-minutes)	0. 08°(5 arc-minutes)	0. 05°(3 arc-minutes)

*Values obtained by multiplying the output shaft speed by a load of ±5% of allowable output torque.

- Output specification: F: F-flange - Installation style is not limited
- Input selection: Clamp collar (The motor shaft is provided without key-way, but can be used with a keyed motor shaft.)
- Model name for ABLE reducer

* 1) Mount code varies depending on the motor.
Please refer to reducer selection tool or contact us for more information.

SHIMPO's adapter flange motor mounting methodology allows for nearly limitless motor mounting options

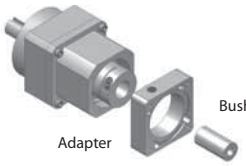

■ Output shaft tapping
B frame: M5 × 10 C frame: M6 × 12 D frame: M8 × 16 E frame: M10 × 20

Metric and NEMA Output Flange

Refer to page 30-31 for Metric and NEMA Output Flange

Contact us for additional information or refer to our online reducer selection tool.

Selection tool www.nidec-shimpo.co.jp/selection/eng

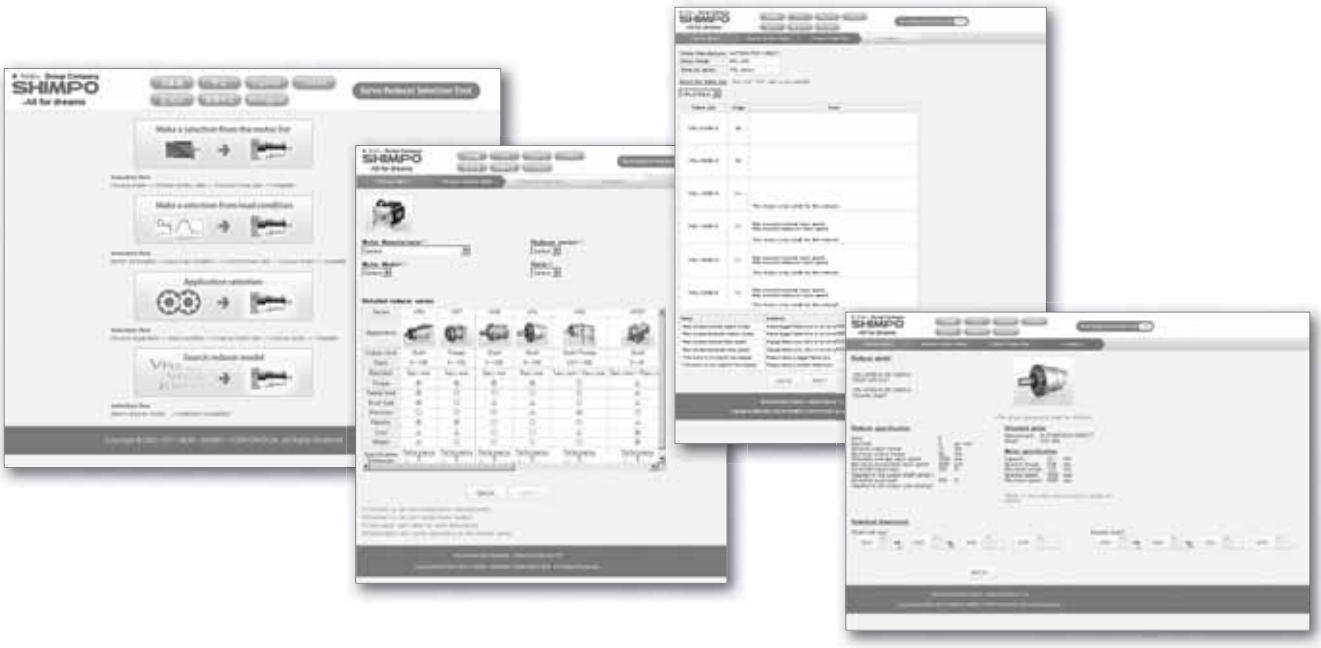

VRSF B-Frame – 1-Stage and 2-Stage Specifications

Frame Size	**B**								
Stage	**1-Stage**					**2-Stage**			
Ratio	Units	Note	3	5	9	15	20	25	35
Nominal Output Torque	[Nm]	--	3.43	2.84	2.35	4.02	5.00	6.27	3.84
Maximum Acceleration Torque	[Nm]	--	10.3	8.53	7.25	12.2	15.0	19.0	11.5
Emergency Stop Torque	[Nm]	--	--	--	--	--	--	--	--
Nominal Input Speed	[rpm]	--	3000			3000			
Maximum Input Speed	[rpm]	*1	5000			5000			
No Load Running Torque	[Nm]	--	0.119			0.048			
Permitted Radial Load	[N]	*2	392	490	588	784	804	882	882
Permitted Axial Load	[N]	*3	196	245	294	392	402	441	441
Moment of Inertia (≤Ø 8)	[kgcm2]	*4	0.081	0.059	0.052	0.057	0.056	0.056	0.052
Moment of Inertia (≤Ø 14)	[kgcm2]	*4	0.150	0.130	0.120	0.130	0.130	0.130	0.120
Efficiency	[%]	--	90			85			
Torsional Rigidity	[Nm/arcmin]	--	0.8			0.8			
Backlash (Standard)	[Arc-min]	--	≤ 15			≤ 15			
Backlash (Low)	[Arc-min]	--	≤ 10			≤ 10			
Backlash (Precision)	[Arc-min]	--	≤ 3			≤ 3			
Noise Level	[dB]	--	≤ 72			≤ 65			
Protection Class	--	--	IP65			IP65			
Ambient Temperature	[°C]	--	0-40			0-40			
Permitted Housing Temperature	[°C]	--	90			90			
Weight (≤Ø 8)	[kg]	*5	0.58			0.75			
Weight (≤Ø 14)	[kg]	*5	0.7			0.86			

*1) Nominal input speed is 3,000 rpm or less

*2) Permitted radial load is measured at the middle of the output shaft

*3) Permitted thrust load is measured at the center of the output shaft

*4) The moment of inertia is reflected to the input shaft of the reducer

*5) The weight varies slightly depending on the input bore size and reduction ratio

Refer to page 30-31 for Metric and NEMA Output Flange

VRSF C-Frame – 1-Stage and 2-Stage Specifications

Frame Size	**C**										
Stage	**1-Stage**					**2-Stage**					
Ratio	Units	Note	3	5	9	15	20	25	35	45	81
Nominal Output Torque	[Nm]	--	6.86	11.5	9.7	16.2	21.1	26.4	15.5	9.5	9.7
Maximum Acceleration Torque	[Nm]	--	20.6	34.3	29.2	48.6	63.3	79.2	46.6	28.6	29.2
Emergency Stop Torque	[Nm]	--	--	--	--	--	--	--	--	--	--
Nominal Input Speed	[rpm]	--	3000			3000					
Maximum Input Speed	[rpm]	*1	5000			5000					
No Load Running Torque	[Nm]	--	0.29			0.19					
Permitted Radial Load	[N]	*2	784	980	1180	1470	1570	1670	1670	1670	1670
Permitted Axial Load	[N]	*3	392	490	588	735	785	833	833	833	833
Moment of Inertia (≤Ø 8)	[kgcm2]	*4	--	--	--	0.077	0.070	0.062	0.055	0.053	0.052
Moment of Inertia (≤Ø 14)	[kgcm2]	*4	0.630	0.380	0.300	0.150	0.140	0.130	0.130	0.120	0.120
--	--	*4	1.100	0.880	0.800	--	--	--	--	--	--
Efficiency	[%]	--	90			85					
Torsional Rigidity	[Nm/arcmin]	--	3			3					
Backlash (Standard)	[Arc-min]	--	≤ 15			≤ 15					
Backlash (Low)	[Arc-min]	--	≤ 5			≤ 5					
Backlash (Precision)	[Arc-min]	--	≤ 3			≤ 3					
Noise Level	[dB]	--	≤ 72			≤ 65					
Protection Class	--	--	IP 65			IP65					
Ambient Temperature	[°C]	--	0-40			0-40					
Permitted Housing Temperature	[°C]	--	90			90					
Weight (≤Ø 8)	[kg]	*5	--			1.8					
Weight (≤Ø 14)	[kg]	*5	1.8			1.9					
Weight (≤Ø 19)	--	--	2.2			--					

*1) Nominal input speed is 3,000 rpm or less

*2) Permitted radial load is measured at the middle of the output shaft

*3) Permitted thrust load is measured at the center of the output shaft

*4) The moment of inertia is reflected to the input shaft of the reducer

*5) The weight varies slightly depending on the input bore size and reduction ratio

Refer to page 30-31 for Metric and NEMA Output Flange

VRSF D-Frame – 1-Stage and 2-Stage Specifications

Frame Size	**D**										
Stage	**1-Stage**					**2-Stage**					
Ratio	Units	Note	3	5	9	15	20	25	35	45	81
Nominal Output Torque	[Nm]	--	18.3	23.5	18.2	30.4	40.6	50.7	37	28.3	17.8
Maximum Acceleration Torque	[Nm]	--	54.9	70.6	54.7	91.2	122	152	111	85.2	53.5
Emergency Stop Torque	[Nm]	--	--	--	--	--	--	--	--	--	--
Nominal Input Speed	[rpm]	--	3000			3000					
Maximum Input Speed	[rpm]	*1	5000			5000					
No Load Running Torque	[Nm]	--	0.51			0.26					
Permitted Radial Load	[N]	*2	882	1080	1470	1760	1910	2060	2060	2060	2060
Permitted Axial Load	[N]	*3	441	539	735	882	955	1030	1030	1030	1030
Moment of Inertia (≤Ø 8)	[kgcm2]	*4	--	--	--	--	--	--	--	--	0.10
Moment of Inertia (≤Ø 14)	[kgcm2]	*4	1.30	0.59	0.38	0.37	0.35	0.34	0.30	0.29	0.29
Moment of Inertia (≤Ø 19)	[kgcm2]	*4	1.80	1.10	0.90	0.86	0.84	0.83	0.79	0.78	0.77
Moment of Inertia (≤Ø 28)	[kgcm2]	*4	3.60	2.90	2.70	2.70	2.70	2.70	--	--	--
Efficiency	[%]	--	90			85					
Torsional Rigidity	[Nm/arcmin]	--	6			6					
Backlash (Standard)	[Arc-min]	--	≤ 15			≤ 15					
Backlash (Low)	[Arc-min]	--	≤ 5			≤ 5					
Backlash (Precision)	[Arc-min]	--	≤ 3			≤ 3					
Noise Level	[dB]	--	≤ 72			≤ 65					
Protection Class	--	--	IP65			IP65					
Ambient Temperature	[°C]	--	0-40			0-40					
Permitted Housing Temperature	[°C]	--	90			90					
Weight (≤Ø 8)	[kg]	*5	--			2.8					
Weight (≤Ø 14)	[kg]	*5	2.8			3.3					
Weight (≤Ø 19)	[kg]	*5	3.2			3.7					
Weight (≤Ø 28)	[kg]	*5	4.0			4.8					

*1) Nominal input speed is 3,000 rpm or less

*2) Permitted radial load is measured at the middle of the output shaft

*3) Permitted thrust load is measured at the center of the output shaft

*4) The moment of inertia is reflected to the input shaft of the reducer

*5) The weight varies slightly depending on the input bore size and reduction ratio

Refer to page 30-31 for Metric and NEMA Output Flange

VRSF E-Frame – 1-Stage and 2-Stage Specifications

Frame Size	E										
Stage			**1-Stage**			**2-Stage**					
Ratio	Units	Note	3	5	9	15	20	25	35	45	81
Nominal Output Torque	[Nm]	--	44.1	56.8	73.5	91.4	78.4	65.4	71	91.3	43.3
Maximum Acceleration Torque	[Nm]	--	132	171	221	274	235	196	213	274	130
Emergency Stop Torque	[Nm]	--	--	--	--	--	--	--	--	--	--
Nominal Input Speed	[rpm]	--	3000			3000					
Maximum Input Speed	[rpm]	*1	5000			5000					
No Load Running Torque	[Nm]	--	1.12			0.62					
Permitted Radial Load	[N]	*2	1370	1670	1960	2350	2500	2650	3430	3520	3530
Permitted Axial Load	[N]	*3	686	833	980	1180	1250	1320	1715	1760	1765
Moment of Inertia (≤Ø 8)	[kgcm2]	*4	--	--	0.61	0.63	0.56	0.53	0.40	0.35	0.34
Moment of Inertia (≤Ø 14)	[kgcm2]	*4	4.40	1.90	1.20	1.10	1.10	1.00	0.90	0.85	0.84
Moment of Inertia (≤Ø 19)	[kgcm2]	*4	6.20	3.70	2.90	3.30	3.20	3.20	2.80	2.70	2.70
Moment of Inertia (≤Ø 28)	[kgcm2]	*4	14.00	11.00	11.00	11.00	11.00	11.00	--	--	--
Efficiency	[%]	--	90			85					
Torsional Rigidity	[Nm/arcmin]	--	20			20					
Backlash (Standard)	[Arc-min]	--	≤ 15			≤ 15					
Backlash (Low)	[Arc-min]	--	≤ 5			≤ 5					
Backlash (Precision)	[Arc-min]	--	≤ 3			≤ 3					
Noise Level	[dB]	--	≤ 75			≤ 75					
Protection Class	--	--	IP65			IP65					
Ambient Temperature	[°C]	--	0-40			0-40					
Permitted Housing Temperature	[°C]	--	90			90					
Weight (≤Ø 8)	[kg]	*5	6.1			7.1					
Weight (≤Ø 14)	[kg]	*5	6.5			7.5					
Weight (≤Ø 19)	[kg]	*5	7.4			9.3					
Weight (≤Ø 28)	[kg]	*5	9.8			11.7					

*1) Nominal input speed is 3,000 rpm or less

*2) Permitted radial load is measured at the middle of the output shaft

*3) Permitted thrust load is measured at the center of the output shaft

*4) The moment of inertia is reflected to the input shaft of the reducer

*5) The weight varies slightly depending on the input bore size and reduction ratio

Refer to page 30-31 for Metric and NEMA Output Flange

VRSF B-Frame – 1-Stage and 2-Stage Dimensions

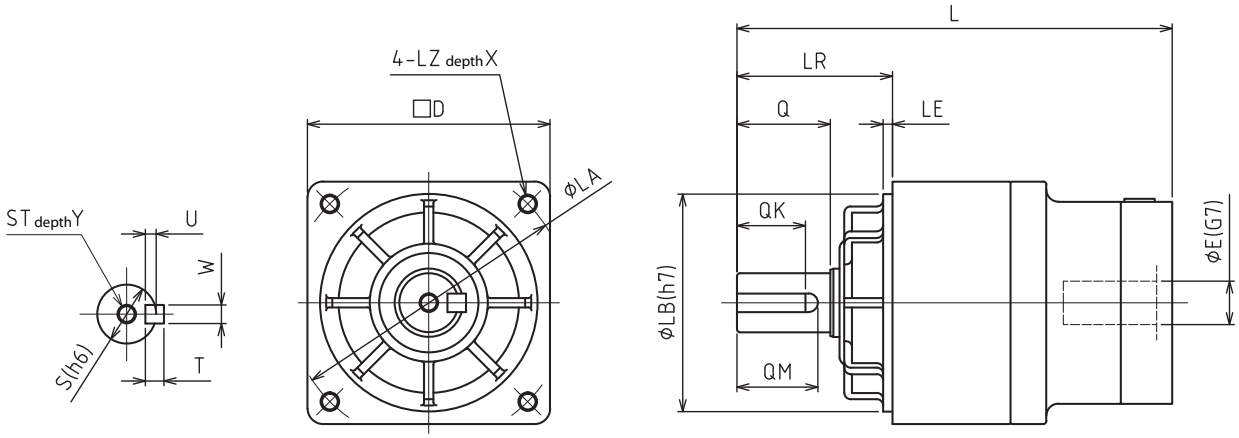

Frame Size	Ratio*	Input Bore Dia. E**	Dimensions															
			L***	LR	S	ST	Y	Q	QM	QK	W×U	T	D	LB	LE	LA	LZ	X
B	1-Stage	≦ φ8	104.5	32	12	M5	10	20	18	16	4×2.5	4	52	50	3	60	M5	12
		≦φ14	107.5															
	2-Stage	≦φ8	115.5															
		≦φ14	118.5															

*1) Single reduction : 1/3 - 1/S9, Double reduction : 1/15 - 1/81 (1/15 - 1/35 for B frame)

*2) Bushing will be inserted to adapt to motor shaft

VRSF B-Frame − 1-Stage and 2-Stage Adapter Dimensions

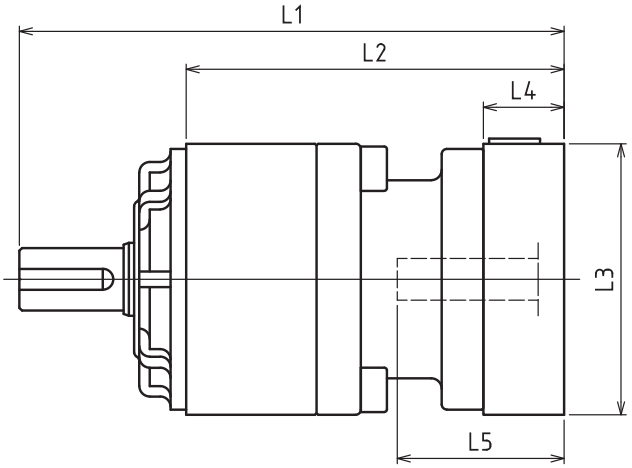

Model number	**: Adapter code	1-Stage					2-Stage				
		L1	L2	L3	L4	L5	L1	L2	L3	L4	L5
VRSF-□-□B-8** (Input shaft bore ≦ φ8)	AA•AC•AD•AF•AG•AL•AM•AN•AQ	104.5	72.5	□52	15.5	32	115.5	83.5	□52	15.5	32
	AB•AE•AH•AJ•AK	109.5	77.5	□52	20.5	37	120.5	88.5	□52	20.5	37
	BA•BB•BD•BE•BG•BH•BJ	104.5	72.5	□60	15.5	32	115.5	83.5	□60	15.5	32
	BC•BF	109.5	77.5	□60	20.5	37	120.5	88.5	□60	20.5	37
	CA	109.5	77.5	□70	20.5	37	120.5	88.5	□70	20.5	37
VRSF-□-□B-14** (Input shaft bore ≦ φ14)	BA•BB•BD•BE•BF•BG•BH•BJ•BK•BP	107.5	75.5	□65	16.5	35	118.5	86.5	□65	16.5	35
	BC•BH•BM•BN	112.5	80.5	□65	21.5	40	123.5	91.5	□65	21.5	40
	BL	117.5	85.5	□65	26.5	45	128.5	96.5	□65	26.5	45
	CA•CC	107.5	75.5	□70	16.5	35	118.5	86.5	□70	16.5	35
	CB	112.5	80.5	□70	21.5	40	123.5	91.5	□70	21.5	40
	DA•DB•DC•DD•DF•DH•DJ	107.5	75.5	□80	16.5	35	118.5	86.5	□80	16.5	35
	DE•DL	112.5	80.5	□80	21.5	40	123.5	91.5	□80	21.5	40
	DG•DK	117.5	85.5	□80	26.5	45	128.5	96.5	□80	26.5	45
	EA•EB•EC•EF•EG•EK•EL	107.5	75.5	□90	16.5	35	118.5	86.5	□90	16.5	35
	EJ•EM	112.5	80.5	□90	21.5	40	123.5	91.5	□90	21.5	40
	ED•EE•EH	117.5	85.5	□90	26.5	45	128.5	96.5	□90	26.5	45
	FA	107.5	75.5	□100	16.5	35	118.5	86.5	□100	16.5	35
	FB	107.5	75.5	□115	16.5	35	118.5	86.5	□115	16.5	35

*1) Single reduction : 1/3 - 1/S9, Double reduction : 1/15 - 1/35

*2) Bushing will be inserted to adapt to motor shaft

For an explanation on the Adapter Flange Code, please turn to page 422.

A more comprehensive adapter flange offering can be found using the NIDEC-SHIMPO Online Selector Tool. The variety is constantly expanding and being updated on the Selector Tool. If you have any questions or need any support, contact NIDEC-SHIMPO.

VRSF C-Frame – 1-Stage and 2-Stage Dimensions

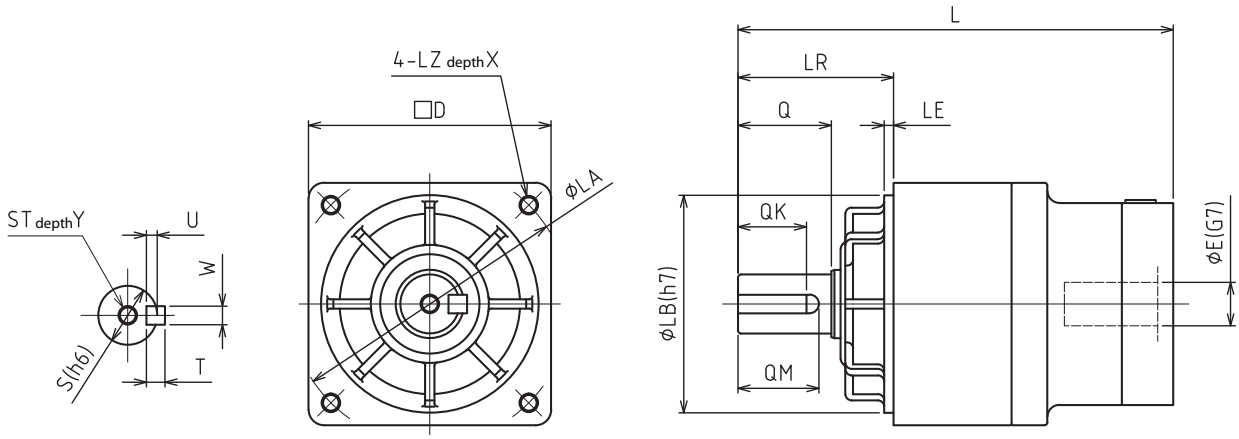

Frame Size	Ratio*	Input Bore Dia. E**	Dimensions															
			L***	LR	S	ST	Y	Q	QM	QK	W×U	T	D	LB	LE	LA	LZ	X
C	1-Stage	≦φ14	140	50	19	M6	12	30	26	22	6×3.5	6	78	70	3	90	M6	20
		≦φ19	156															
	2-Stage	≦φ8	147.5															
		≦φ14	150.5															

*1) Single reduction : 1/3 - 1/S9, Double reduction : 1/15 - 1/81 (1/15 - 1/35 for B frame)

*2) Bushing will be inserted to adapt to motor shaft

VRSF C-Frame − 1-Stage and 2-Stage Adapter Dimensions

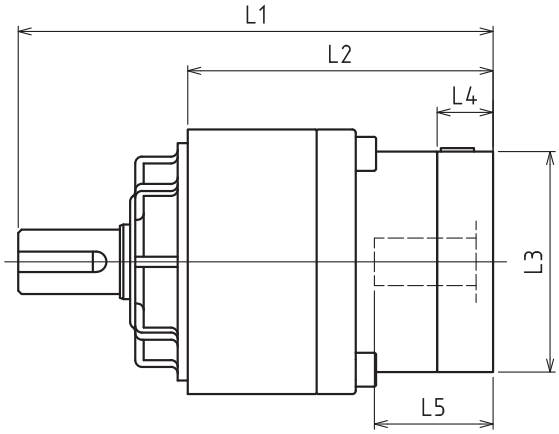

Model number	**: Adapter code	1-Stage					2-Stage				
		L1	L2	L3	L4	L5	L1	L2	L3	L4	L5
VRSF-□-□C-8** (Input shaft bore ≦ φ8)	AA•AC•AD•AF•AG•AL•AM•AN•AQ	--	--	--	--	--	147.5	97.5	□52	15.5	32
	AB•AE•AH•AJ•AK	--	--	--	--	--	152.5	102.5	□52	20.5	37
	BA•BB•BD•BE•BG•BH•BJ	--	--	--	--	--	147.5	97.5	□60	15.5	32
	BC•BF	--	--	--	--	--	152.5	102.5	□60	20.5	37
	CA	--	--	--	--	--	152.5	102.5	□70	20.5	37
VRSF-□-□C-14** (Input shaft bore ≦ φ14)	BA•BB•BD•BE•BF•BG•BH•BJ•BK•BP	140	90	□65	16.5	35	150.5	100.5	□65	16.5	35
	BC•BH•BM•BN	145	95	□65	21.5	40	155.5	105.5	□65	21.5	40
	BL	150	100	□65	26.5	45	160.5	110.5	□65	26.5	45
	CA•CC	140	90	□70	16.5	35	150.5	100.5	□70	16.5	35
	CB	145	95	□70	21.5	40	155.5	105.5	□70	21.5	40
	DA•DB•DC•DD•DF•DH•DJ	140	90	□80	16.5	35	150.5	100.5	□80	16.5	35
	DE•DL	145	95	□80	21.5	40	155.5	105.5	□80	21.5	40
	DG•DK	150	100	□80	26.5	45	160.5	110.5	□80	26.5	45
	EA•EB•EC•EF•EG•EK•EL	140	90	□90	16.5	35	150.5	100.5	□90	16.5	35
	EJ•EM	145	95	□90	21.5	40	155.5	105.5	□90	21.5	40
	ED•EE•EH	150	100	□90	26.5	45	160.5	110.5	□90	26.5	45
	FA	140	90	□100	16.5	35	150.5	100.5	□100	16.5	35
	FB	140	90	□115	16.5	35	150.5	100.5	□115	16.5	35
VRSF-□-□C-19** (Input shaft bore ≦ φ19)	DA•DB•DC	156	106	□80	25	50	--	--	--	--	--
	DD	166	116	□80	35	60	--	--	--	--	--
	DE	161	111	□80	30	55	--	--	--	--	--
	EA	161	111	□90	30	55	--	--	--	--	--
	EB•ED	156	106	□90	25	50	--	--	--	--	--
	EC	166	116	□90	35	60	--	--	--	--	--
	FA	156	106	□100	25	50	--	--	--	--	--
	FB	166	116	□100	35	60	--	--	--	--	--
	GA•GC•GH	161	111	□115	30	55	--	--	--	--	--
	GB•GD•GJ	156	106	□115	25	50	--	--	--	--	--
	GE•GF	166	116	□115	35	60	--	--	--	--	--
	HA	156	106	□130	25	50	--	--	--	--	--
	HB	171	121	□130	40	65	--	--	--	--	--
	HC•HD•HE	161	111	□130	30	55	--	--	--	--	--
	JA	166	116	□150	35	60	--	--	--	--	--
	JB	171	121	□150	40	65	--	--	--	--	--

*1) Single reduction : 1/3 - 1/S9, Double reduction : 1/15 - 1/81 *2) Bushing will be inserted to adapt to motor shaft

For an explanation on the Adapter Flange Code, please turn to page 422.

A more comprehensive adapter flange offering can be found using the NIDEC-SHIMPO Online Selector Tool. The variety is constantly expanding and being updated on the Selector Tool. If you have any questions or need any support, contact NIDEC-SHIMPO.

VRSF D-Frame − 1-Stage and 2-Stage Dimensions

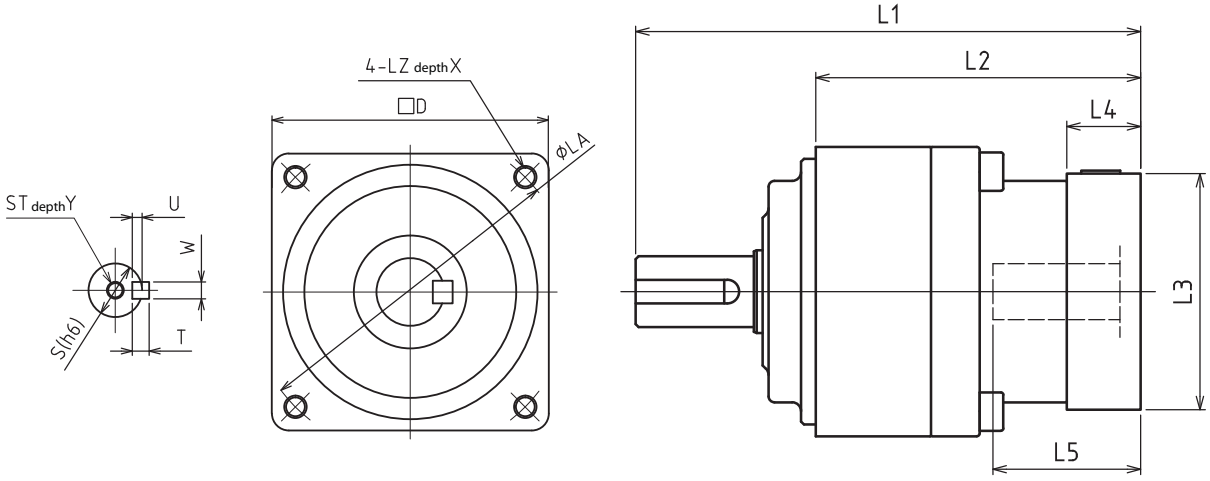

Frame Size	Ratio*	Input Bore Dia. E**	Dimensions															
			L***	LR	S	ST	Y	Q	QM	QK	W×U	T	D	LB	LE	LA	LZ	X
D	1-Stage	≦ φ14	155	61	24	M8	16	40	35	30	8×4	7	98	90	5	115	M8	20
		≦ φ19	171															
		≦ φ28	186															
	2-Stage	≦ φ8	163															
		≦ φ14	169															
		≦ φ19	184															
		≦ φ28	200.5															

*1) Single reduction : 1/3 - 1/S9, Double reduction : 1/15 - 1/81 (1/15 - 1/35 for B frame)

*2) Bushing will be inserted to adapt to motor shaft

VRSF D-Frame − 1-Stage and 2-Stage Adapter Dimensions

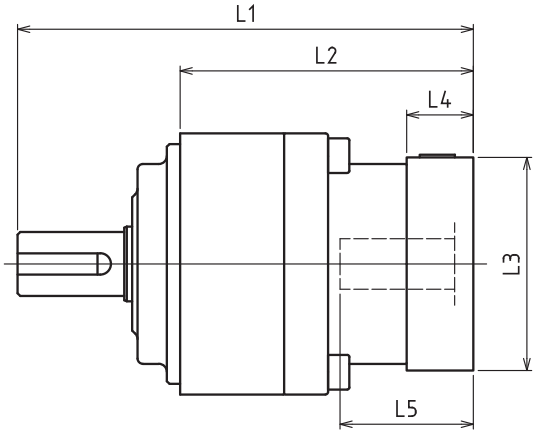

Model number	**: Adapter code	1-Stage					2-Stage				
		L1	L2	L3	L4	L5	L1	L2	L3	L4	L5
VRSF-□-□D-8** (Input shaft bore ≦ φ8)	AA•AC•AD•AF•AG•AL•AM•AN•AQ	--	--	--	--	--	163	102	□52	15.5	32
	AB•AE•AH•AJ•AK	--	--	--	--	--	168	107	□52	20.5	37
	BA•BB•BD•BE•BG•BH•BJ	--	--	--	--	--	163	102	□60	15.5	32
	CA	--	--	--	--	--	168	107	□70	20.5	37
VRSF-□-□D-14** (Input shaft bore ≦ φ14)	BA•BB•BD•BE•BF•BG•BH•BJ•BK•BP	155	94	□65	16.5	35	169	108	□65	16.5	35
	BC•BH•BM•BN	160	99	□65	21.5	40	174	113	□65	21.5	40
	CA•CC	155	94	□70	16.5	35	169	108	□70	16.5	35
	DA•DB•DC•DD•DF•DH•DJ	155	94	□80	16.5	35	169	108	□80	16.5	35
	EA•EB•EC•EF•EG•EK•EL	155	94	□90	16.5	35	169	108	□90	16.5	35
	FA	155	94	□100	16.5	35	169	108	□100	16.5	35
	FB	165	104	□100	26.5	45	179	118	□100	26.5	45
	JA	170	109	□150	31.5	50	184	123	□115	31.5	50
VRSF-□-□D-19** (Input shaft bore ≦ φ19)	DA•DB•DC	171	110	□80	25	50	184	123	□80	25	50
	EB•ED	171	110	□90	25	50	184	123	□90	25	50
	FA	171	110	□100	25	50	184	123	□100	25	50
	FB	181	120	□100	35	60	194	133	□100	35	60
	GB•GD•GJ	171	110	□115	25	50	184	123	□115	25	50
	HA	171	110	□130	25	50	184	123	□130	25	50
	HB	186	125	□130	40	65	199	138	□130	40	65
	HC•HD•HE	176	115	□130	30	55	189	128	□130	30	55
	JA	181	120	□150	35	60	194	133	□150	35	60
	JB	186	125	□150	40	65	199	138	□150	40	65
VRSF-□-□D-28** (Input shaft bore ≦ φ28)	FA•FB•FC	186	125	□100	35	67	200.5	139.5	□100	35	67
	FD•FE	181	120	□100	30	62	195.5	134.5	□100	30	62
	GA•GB•GC•GD•GE•GF•GG•GH	186	125	□115	35	67	200.5	139.5	□115	35	67
	HA•HC•HD	186	125	□130	35	67	200.5	139.5	□130	35	67
	HB	196	135	□130	45	77	210.5	149.5	□130	45	77
	HE	201	140	□130	50	82	215.5	154.5	□130	50	82
	HF	181	120	□130	30	62	195.5	134.5	□130	30	62
	JA•JB•JC•JF	186	125	□150	35	67	200.5	139.5	□150	35	67
	JD	206	145	□150	55	87	220.5	159.5	□150	55	87
	JE	210.5	149.5	□150	45	77	210.5	149.5	□150	45	77
	KA•KB	186	125	□180	35	67	200.5	139.5	□180	35	67
	KD	196	135	□180	45	77	210.5	149.5	□180	45	77

*1) Single reduction : 1/3 - 1/S9, Double reduction : 1/15 - 1/81 *2) Bushing will be inserted to adapt to motor shaft

For an explanation on the Adapter Flange Code, please turn to page 422.

A more comprehensive adapter flange offering can be found using the NIDEC-SHIMPO Online Selector Tool. The variety is constantly expanding and being updated on the Selector Tool. If you have any questions or need any support, contact NIDEC-SHIMPO.

VRSF E-Frame – 1-Stage and 2-Stage Dimensions

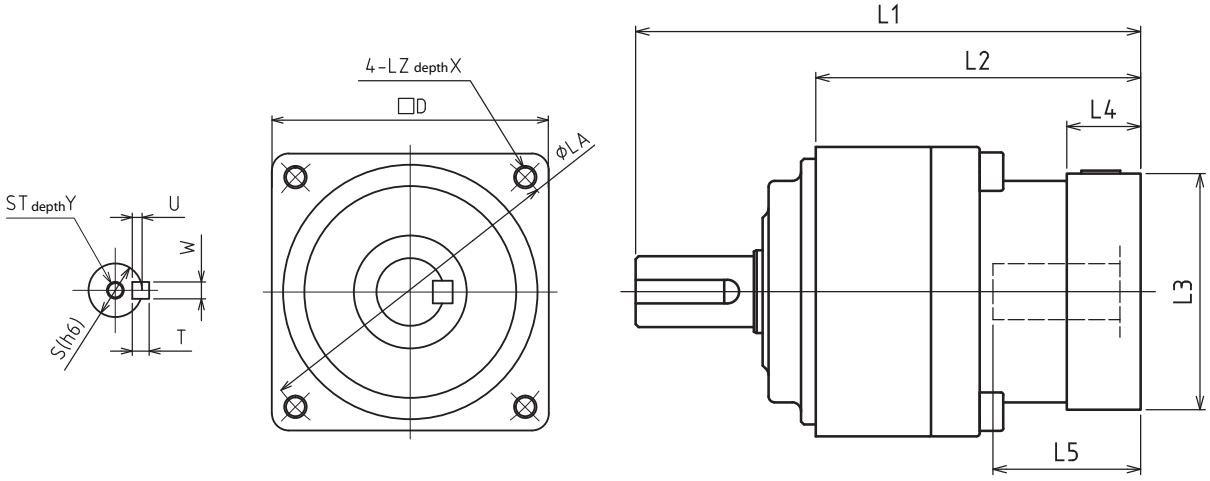

Frame Size	Ratio*	Input Bore Dia. E**	Dimensions															
			L***	LR	S	ST	Y	Q	QM	QK	W×U	T	D	LB	LE	LA	LZ	X
E	1-Stage	≦ φ14	189	75	32	M10	20	55	52	45	10×5	8	125	110	5	135	M10	20
		≦ φ19	198.5															
		≦ φ28	224															
		≦ φ38	240															
	2-Stage	≦ φ14	210															
		≦ φ19	225															
		≦ φ28	246.5															
		≦ φ38	261.5															

*1) Single reduction : 1/3 - 1/S9, Double reduction : 1/15 - 1/81 (1/15 - 1/35 for B frame)

*2) Bushing will be inserted to adapt to motor shaft

VRSF E-Frame − 1-Stage and 2-Stage Adapter Dimensions

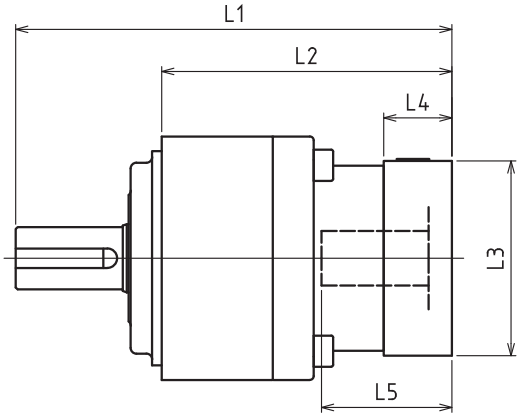

Model number	**: Adapter code	1-Stage					2-Stage				
		L1	L2	L3	L4	L5	L1	L2	L3	L4	L5
VRSF-□-□E-14** (Input shaft bore ≦ φ14)	BA•BB•BD•BE•BF•BG•BH•BJ•BK•BP	189	114	□ 65	16.5	35	210	135	□65	16.5	35
	BC•BH•BM•BN	194	119	□65	21.5	40	215	140	□65	21.5	40
	CA•CC	189	114	□70	16.5	35	210	135	□70	16.5	35
	DA•DB•DC•DD•DF•DH•DJ	189	114	□80	16.5	35	210	135	□80	16.5	35
	EA•EB•EC•EF•EG•EK•EL	189	114	□90	16.5	35	210	135	□90	16.5	35
	FA	189	114	□100	16.5	35	210	135	□100	16.5	35
	FB	199	124	□100	26.5	45	220	145	□100	26.5	45
	JA	204	129	□150	31.5	50	225	150	□150	31.5	50
VRSF-□-□E-19** (Input shaft bore ≦ φ19)	DA•DB•DC	198.5	123.5	□80	25	50	225	150	□80	25	50
	EB•ED	198.5	123.5	□90	25	50	225	150	□90	25	50
	FA	198.5	123.5	□100	25	50	225	150	□100	25	50
	FB	208.5	133.5	□100	35	60	235	160	□100	35	60
	GB•GD•GJ	198.5	123.5	□115	25	50	225	150	□115	25	50
	HA	198.5	123.5	□130	25	50	225	150	□130	25	50
	HB	213.5	138.5	□130	40	65	240	165	□130	40	65
	JA	208.5	133.5	□150	35	60	235	160	□150	35	60
VRSF-□-□ E-28** (Input shaft bore ≦ φ28)	FA•FB•FC	224	149	□100	35	67	246.5	171.5	□100	35	67
	GA•GB•GC•GD•GE•GF•GG•GH	224	149	□115	35	67	246.5	171.5	□115	35	67
	HA•HC•HD	224	149	□130	35	67	246.5	171.5	□130	35	67
	HB	234	159	□130	45	77	256.5	181.5	□130	45	77
	HF	119	144	□130	30	62	241.5	166.5	□130	30	62
	JA•JB•JC•JF	224	149	□150	35	67	246.5	171.5	□150	35	67
	KA•KB•KE	224	149	□180	35	67	246.5	171.5	□180	35	67
	LA	224	149	□200	35	67	246.5	171.5	□200	35	67
	LB	234	159	□200	45	77	256.5	181.5	□200	45	77
	MA	224	149	□220	35	67	246.5	171.5	□220	35	67
	MB	234	159	□220	45	77	256.5	181.5	□220	45	77
VRSF-□-□E-38** (Input shaft bore ≦ φ38)	HA	240	165	□130	45	82	261.5	186.5	□130	45	82
	HB•HE	235	160	□130	40	77	256.5	181.5	□130	40	77
	JA	240	165	□150	45	82	261.5	186.5	□150	45	82
	KA•KB•KC	240	165	□180	45	82	261.5	186.5	□180	45	82
	KD	275	200	□180	80	117	296.5	221.5	□180	80	117
	KE	255	180	□180	60	97	276.5	201.5	□180	60	97
	MA•MB	240	165	□220	45	82	261.5	186.5	□220	45	82

*1) Single reduction : 1/3 - 1/S9, Double reduction : 1/15 - 1/81 *2) Bushing will be inserted to adapt to motor shaft

For an explanation on the Adapter Flange Code, please turn to page 422.

A more comprehensive adapter flange offering can be found using the NIDEC-SHIMPO Online Selector Tool. The variety is constantly expanding and being updated on the Selector Tool. If you have any questions or need any support, contact NIDEC-SHIMPO.

VRSF Optional Metric Output Flange

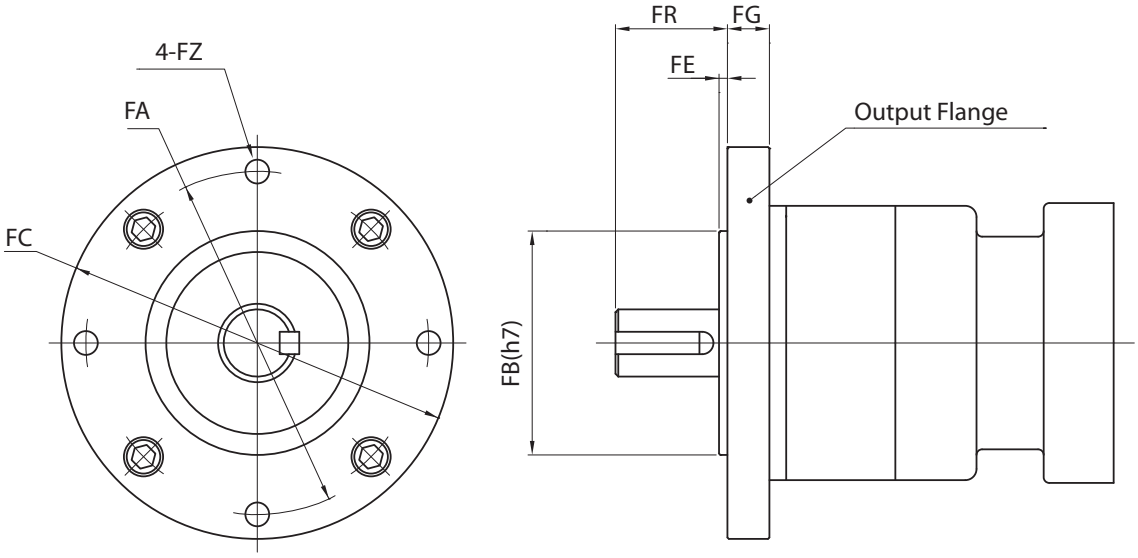

Frame Size		FG	FR	FE	FB	FC	FA	FZ
B	mm	8	24	3	50	75	65	6
	inch	0.315	0.945	0.118	1.969	2.953	2.559	0.236
C	mm	12	33	3	72	110	95	7
	inch	0.472	1.299	0.118	2.835	4.331	3.74	0.276
D	mm	13	48	5	90	134	115	8.8
	inch	0.512	1.89	0.197	3.543	5.276	4.528	0.346

VRSF Optional NEMA Output Flange

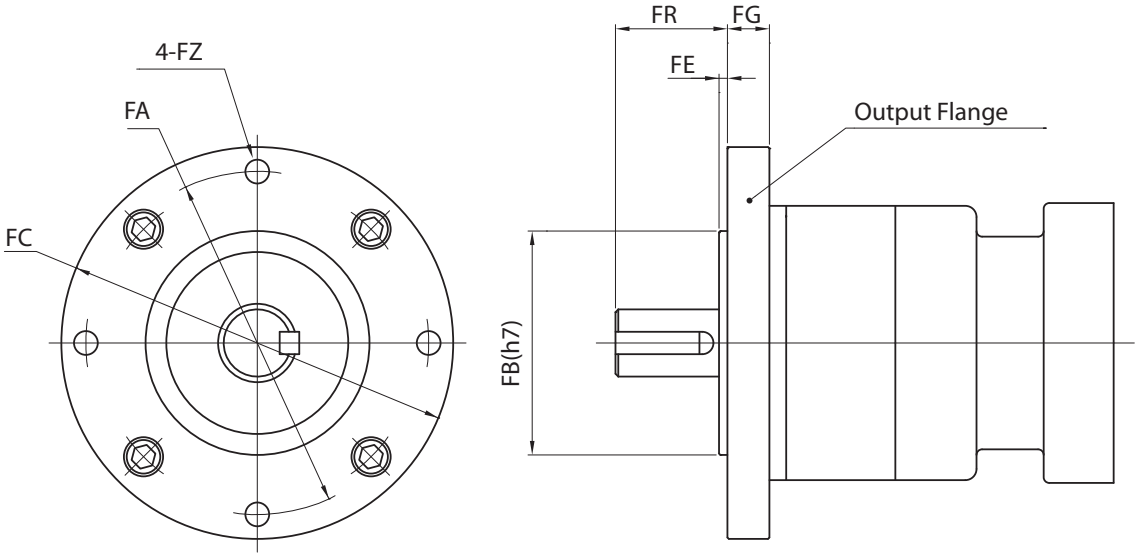

Frame Size		FG	FR	FE	FB	FC	FA	FZ
B	mm	12	20	2	38.1	78	66.68	5.2
	inch	0.472	0.787	0.079	1.5	3.071	2.625	0.205
C	mm	12	30	2	73.02	110	98.43	5.6
	inch	0.472	1.181	0.079	2.876	4.331	3.875	0.22
D	mm	15	40	3	55.56	140	125.73	7.1
	inch	0.591	1.575	0.118	2.187	5.512	4.95	0.28
E	mm	20	55	3	114.3	168	149.23	10.2
	inch	0.787	2.165	0.118	4.5	6.614	5.875	0.402

VRL-SERIES

An excellent choice when very requiring good accuracy and reliability at an exceptional value. This inline planetary gearbox has a thread-in mounting style along with a level of precision and torque capacity that is best-in-class. Offered in a coaxial shaft design, with a maximum 5 arc-min backlash rating, the VRL is an accurate, high performance, cost effective solution for any OEM.

The VRL Series has dimensions that allow the reducer to be a direct substitute for some other common competitor models. The machining quality of the helical planetary gears means a very quiet and more efficient gearbox than competitive products. These planetary gearheads are the perfect solution for servomotor applications such as gantries, injection-molding machines, pick and place automation, and linear slides.

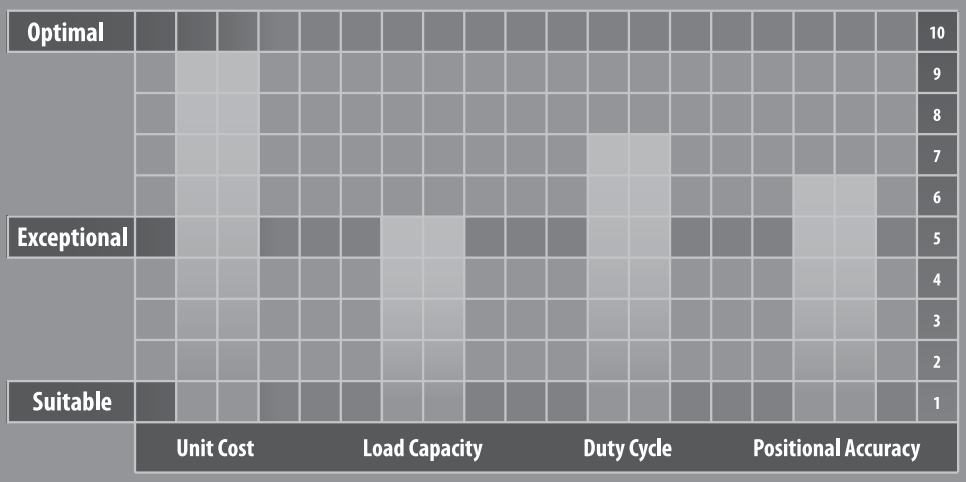

VRL-SERIES

- Industry standard mounting dimensions
- Large variety of frame sizes and ratios
- Thread-in mounting style
- Best-In-class backlash (≤5 arc-min)
- Ships in 48 hours in standard frame sizes
- Assembled in the USA

VRL-Series– Features

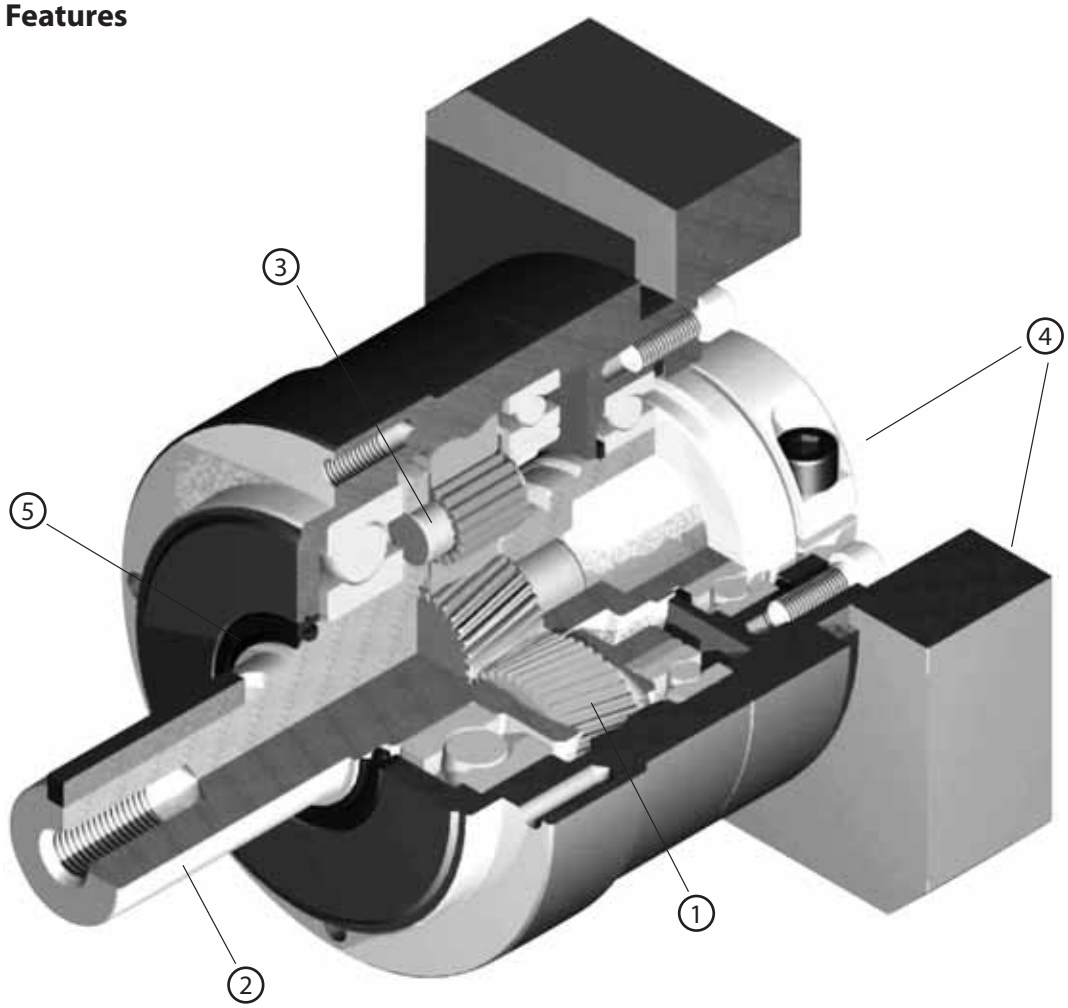

1. Quiet operation: Helical cut gears contribute to reduced vibration and noise
2. High precision: Standard backlash is 5 arc-min, ideal for the most accurate applications
3. High rigidity & torque: Rigidity and torque capacity are achieved by using uncaged needle roller bearings
4. Adapter bushing connection: Enables a simple, effective attachment to most servo motors
5. No leakage through the seal: High viscosity, anti-separation grease does not liquefy and does not migrate away from the gears
6. Maintenance-free: No need to replace the grease for the life of the unit. The reducer can be positioned in any orientation

VRL-Series – Model Code

VR	L	–	090	B	–	7	–	K	5	–	19HB16

- 19HB16: * Adapter flange code
- 5: Backlash 5··· 5arc-min
- K: Output style K··· Shaft with key; S··· Smooth shaft
- 7: Ratio Single: 3, 4, 5, 6, 7, 8, 9, 10; Double: 15, 16, 20, 25, 28, 30, 35, 40, 45, 50, 60, 70, 80, 90, 100
- B: Generation of design
- 090: Frame size 050, 070, 090, 120, 155, 205, 235
- L: Series name VRL Series
- VR: Model name for ABLE reducer

*1) Adapter flange code
Adapter flange code varies depending on the motor

*2) For all washdown intensive and food grade options, refer to pages 36 and 37

Contact us for additional information or refer to our online reducer selection tool.

Selection tool www.nidec-shimpo.co.jp/selection/eng

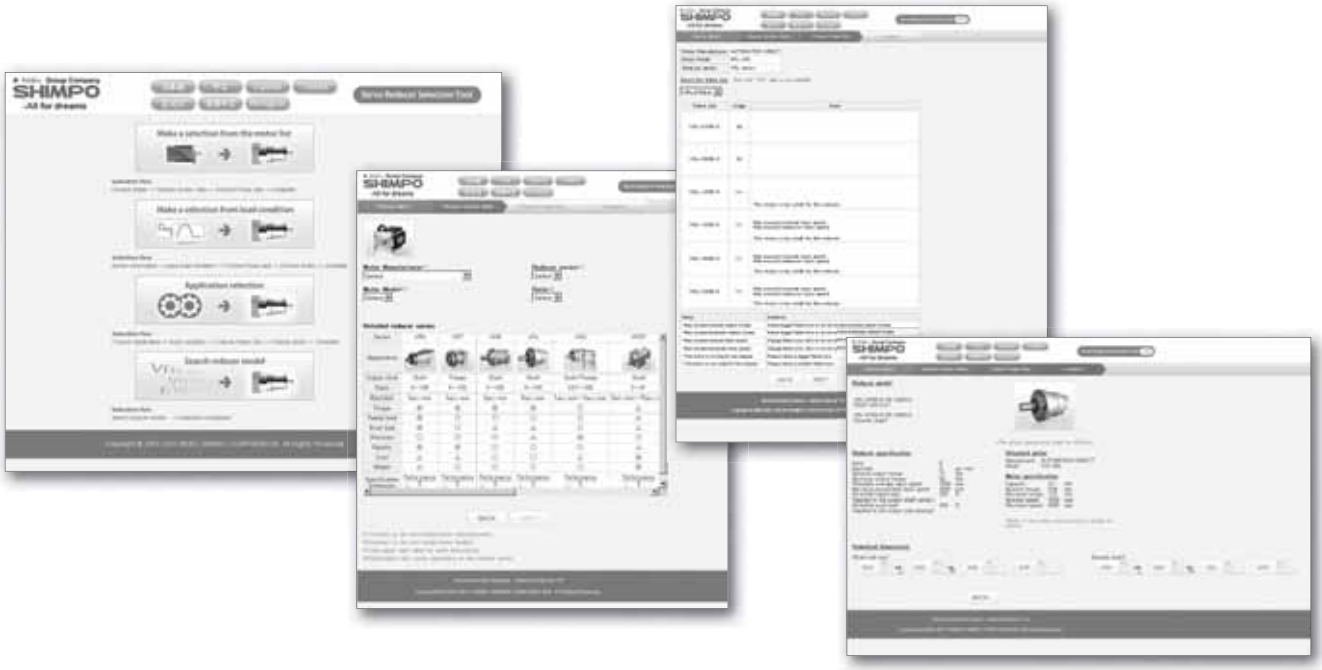

ABLE Washdown and Food Duty Reducers

Motion control applications for production environments within the Food and Beverage, Personal Care, and Pharmaceutical industries often require materials of construction and sealants that provide higher levels of protection. To improve our product offering to these customers, NIDEC-SHIMPO is now offering Washdown and Food Grade à la carte options for our inline and right-angle planetary reducers. These options provide ultimate flexibility without sacrificing on precision and performance.

Upgradeable Features include the following;

- *Special coatings, including Food Grade white epoxy, Steel-It, among others*
- *Sealed bearing, and Viton seal at output*
- *Stainless steel screws, fasteners, etc.*
- *Special sealant for better resistance to solvents*
- *Stainless steel output shaft*
- *Food Grade grease for exposure sensitive environments*

Note:

1) For Food Grade grease, special consideration is required when sizing the reducer. Contact NIDEC-SHIMPO for support on these applications.
2) IP65 rating is based on standard protection criteria and commonly accepted test conditions. Any exposure at extreme conditions (continuous exposure, excessive pressure, etc.) is not considered accepted environment for given IP rating.

Build your Ideal Reducer

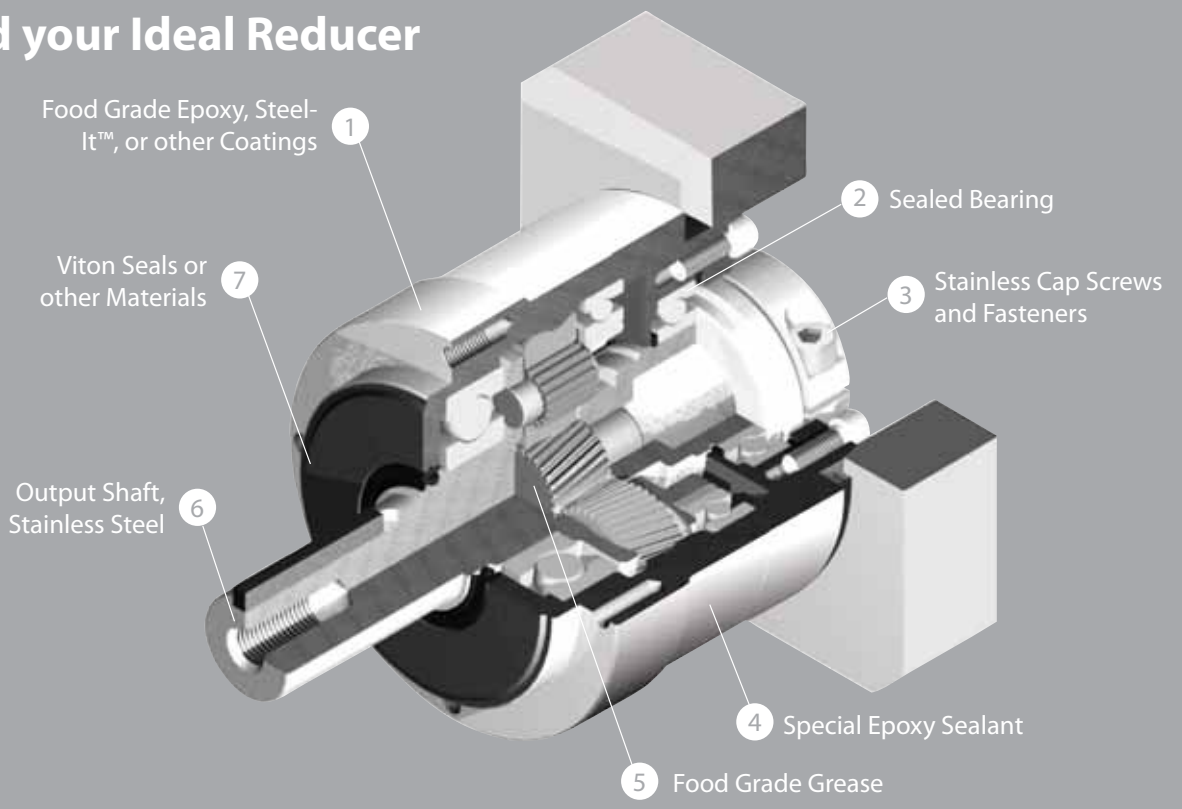

Immediate Availability for these Models:

Series	VRL		
Frame Size	070	090	120
1-Stage	3, 5, 7, 10:1		
2-Stage	15, 25, 28, 30, 35, 50, 70, 100:1		

Series	VRB		
Frame Size	060	090	115
1-Stage	3, 5, 7, 10:1		
2-Stage	15, 25, 28, 30, 35, 50, 70, 100:1		

VRL and VRB inline frame sizes and ratios can be quickly assembled with the Washdown and Food Grade options. Small quantity orders will be tested, assembled, and shipped within 2 – 4 days. For all other VRL, VRB, VRS inline series and EVL, EVB, EVS right-angle series frame size and ratio combinations, please contact SHIMPO for price and availability from our main manufacturing facility.

There are many Washdown and Food Grade features that can be added to your reducer. Below is an explanation on the model code, when specifying a reducer with the ideal performance and protection for your application.

Washdown – Model Code

VRB	090	007	K	3	19HB16	XV
Series	Frame Size	Ratio	Output shaft style	Backlash	Adapter code	Washdown, Food Grade Options

Order Code		Description of Features
X	**V**	**Food Grade Grease; Food Grade White Epoxy; IP 65; SS shaft**
–		Standard Grease; Standard Paint
W		Standard Grease; Food Grade White Epoxy
S		Standard Grease; Steel - It™
F		Food Grade Grease; Standard Paint
X		Food Grade Grease; Food Grade White Epoxy
G		Food Grade Grease; Steel – It™
	–	Standard Protection; Standard Shaft, Fasteners
	I	Standard Protection; Stainless Steel Shaft, Fasteners
	V	IP65 Protection; Stainless Steel Shaft, Fasteners

As the global marketplace becomes increasingly competitive, NIDEC-SHIMPO continues to raise the bar in terms of product quality, flexibility, and availability – providing a real value to our customers. Our new Washdown and Food duty reducers serve as another good example where NIDEC-SHIMPO is delivering improved value to our customers.

Contact NIDEC-SHIMPO for more details:

Toll-free: (800) 842-1470

Email: info@nidec-shimpo.com

VRL-050 – 1-Stage Specifications

Frame Size	**050**									
Stage	**1-Stage**									
Ratio	Units	Note	3	4	5	6	7	8	9	10
Nominal Output Torque	[Nm]	*1	6	9	9	9	9	9	6	6
Maximum Acceleration Torque	[Nm]	*2	12	18	18	18	18	18	12	12
Emergency Stop Torque	[Nm]	*3	30	35	35	35	35	35	30	30
Nominal Input Speed	[rpm]	*4	4000							
Maximum Input Speed	[rpm]	*5	8000							
No Load Running Torque	[Nm]	*6	0.03							
Permitted Radial Load	[N]	*7	240	270	290	310	320	340	350	360
Permitted Axial Load	[N]	*8	270	300	330	360	380	410	430	450
Maximum Radial Load	[N]	*9	710							
Maximum Axial Load	[N]	*10	640							
Moment of Inertia (≤Ø 8)	[kgcm2]	--	0.053	0.041	0.036	0.034	0.032	0.031	0.031	0.030
Moment of Inertia (≤ Ø 14)	[kgcm2]	--	0.091	0.079	0.074	0.072	0.071	0.070	0.069	0.069
Efficiency	[%]	*11	95							
Torsional Rigidity	[Nm/arc-min]	*12	2							
Maximum Torsional Backlash	[arc-min]	--	≤ 5							
Noise Level	[dB]	*13	61							
Protection Class	--	*14	IP54 (IP65)							
Ambient Temperature	[°C]	--	0-40							
Permitted Housing Temperature	[°C]	--	90							
Weight	[kg]	*15	0.7							

VRL-050 – 2-Stage Specifications

Frame Size	**050**									
Stage	**2-Stage**									
Ratio	Units	Note	15	16	20	25	28	30	35	40
Nominal Output Torque	[Nm]	*1	6	9	9	9	9	9	9	9
Maximum Acceleration Torque	[Nm]	*2	12	18	18	18	18	12	18	18
Emergency Stop Torque	[Nm]	*3	30	35	35	35	35	30	35	35
Nominal Input Speed	[rpm]	*4	4000							
Maximum Input Speed	[rpm]	*5	8000							
No Load Running Torque	[Nm]	*6	0.01							
Permitted Radial Load	[N]	*7	410	420	460	490	510	520	550	570
Permitted Axial Load	[N]	*8	540	550	610	640	640	640	640	640
Maximum Radial Load	[N]	*9	710							
Maximum Axial Load	[N]	*10	640							
Moment of Inertia (≤Ø 8)	[kgcm2]	--	0.035	0.038	0.034	0.034	0.038	0.030	0.034	0.030
Moment of Inertia (≤ Ø 14)	[kgcm2]	--	--	--	--	--	--	--	--	--
Efficiency	[%]	*11	90							
Torsional Rigidity	[Nm/arc-min]	*12	2							
Maximum Torsional Backlash	[arc-min]	--	≤ 7							
Noise Level	[dB]	*13	61							
Protection Class	--	*14	IP54 (IP65)							
Ambient Temperature	[°C]	--	0-40							
Permitted Housing Temperature	[°C]	--	90							
Weight	[kg]	*15	0.8							

VRL-050 – 2-Stage Specifications

Frame Size	**050**								
Stage	**2-Stage**								
Ratio	Units	Note	45	50	60	70	80	90	100
Nominal Output Torque	[Nm]	*1	6	9	9	9	9	6	6
Maximum Acceleration Torque	[Nm]	*2	12	18	18	18	18	12	12
Emergency Stop Torque	[Nm]	*3	30	35	35	35	35	30	30
Nominal Input Speed	[rpm]	*4	4000						
Maximum Input Speed	[rpm]	*5	8000						
No Load Running Torque	[Nm]	*6	0.01						
Permitted Radial Load	[N]	*7	600	620	660	690	710	710	710
Permitted Axial Load	[N]	*8	640	640	640	640	640	640	640
Maximum Radial Load	[N]	*9	710						
Maximum Axial Load	[N]	*10	640						
Moment of Inertia (≤Ø 8)	[kgcm2]	--	0.034	0.030	0.030	0.030	0.030	0.030	0.030
Moment of Inertia (≤ Ø 14)	[kgcm2]	--	--	--	--	--	--	--	--
Efficiency	[%]	*11	90						
Torsional Rigidity	[Nm/arc-min]	*12	2						
Maximum Torsional Backlash	[arc-min]	--	≤ 7						
Noise Level	[dB]	*13	61						
Protection Class	--	*14	IP54 (IP65)						
Ambient Temperature	[°C]	--	0-40						
Permitted Housing Temperature	[°C]	--	90						
Weight	[kg]	*15	0.8						

*1) At nominal input speed, service life is 20,000 hours
*2) The maximum torque when starting or stopping operation
*3) The maximum torque allowed under a stress situation (Permitted 1,000 times during service life)
*4) The average input speed
*5) The maximum intermittent input speed
*6) This is the torque at no load applied on the input shaft. The input speed is 4,000 rpm for VRL 050
*7) At this load and nominal input speed, service life will be 20,000 hours. (The radial load applied to the output side bearing)
*8) At this load and nominal input speed, service life will be 20,000 hours. (The axial load applied to the output shaft center)
*9) The maximum radial load that the reducer can accept
*10) The maximum axial load that the reducer can accept
*11) The efficiency at the nominal torque rating
*12) This does not include the lost motion
*13) Contact NIDEC-SHIMPO for the testing conditions and environment
*14) IP65 (wash-down) is available as an option. Contact NIDEC-SHIMPO for more details and our food grade options
*15) The weight may vary slightly between models

VRL-050 – 1-Stage Dimensions

Input shaft bore ≦φ8

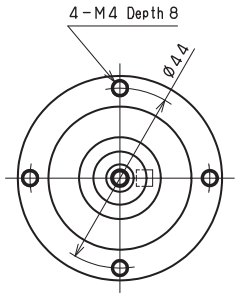

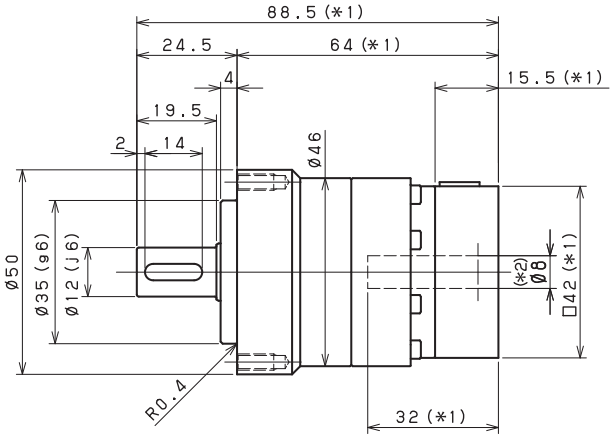

Input shaft bore ≦φ14

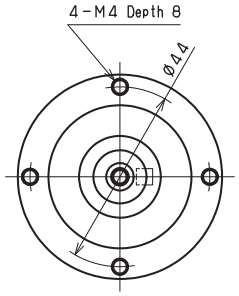

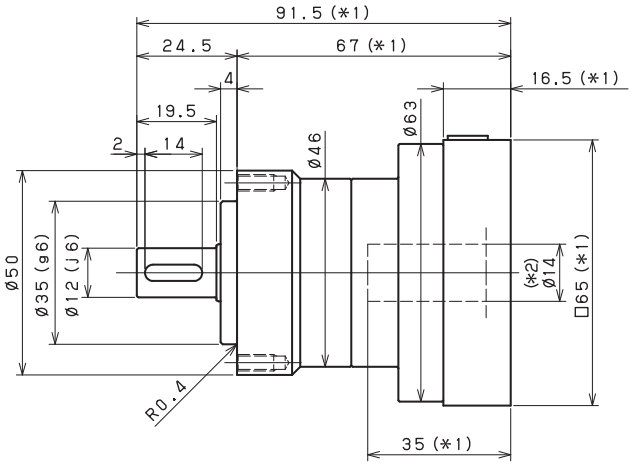

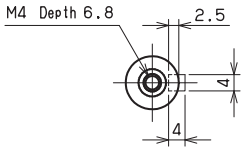

Shaft with key

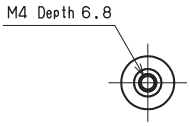

Smooth shaft

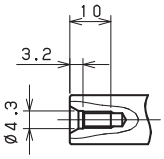

*1) Length will vary depending on motor

*2) Bushing will be inserted to adapt to motor shaft

VRL-050 – 2-Stage Dimensions

Input shaft bore ≦φ8

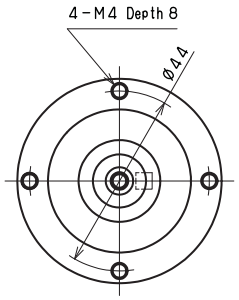

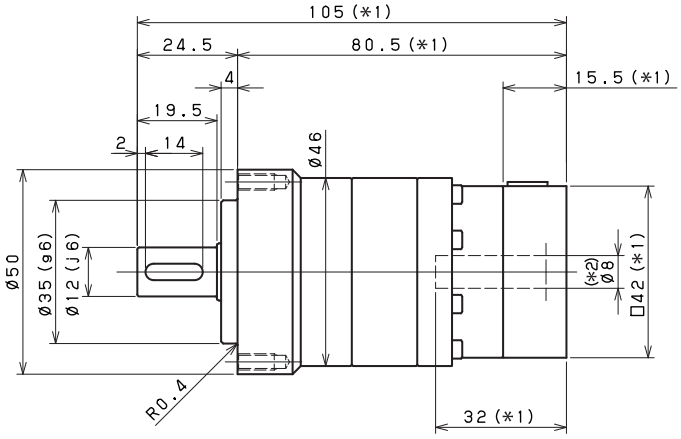

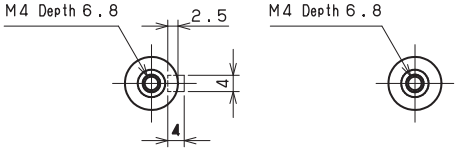

Shaft with key

Smooth shaft

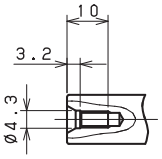

*1) Length will vary depending on motor

*2) Bushing will be inserted to adapt to motor shaft

VRL-050 – 1-Stage Adapter Dimensions

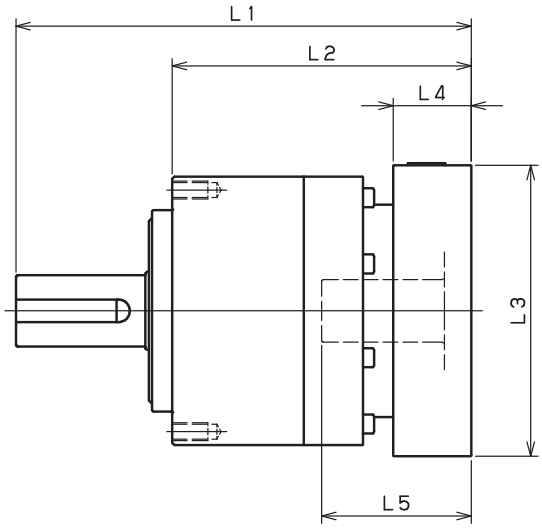

Model number	**: Adapter code	1-Stage					
		L1	L*	L2	L3	L4	L5
VRL-050-□-□-S8** (Input shaft bore ≦ φ8)	ZA•ZC•ZD•ZF•ZG•ZL•ZM•ZN•ZQ	88.5	73	64	□42	15.5	32
	ZB•ZE•ZH•ZJ•ZK	93.5	73	69	□42	20.5	37
	BA•BB•BD•BE•BG•BH•BJ	88.5	73	64	□60	15.5	32
	BC•BF	93.5	73	69	□60	20.5	37
VRL-050-□-□-14** (Input shaft bore ≦ φ14)	BA•BB•BD•BE•BF•BG•BJ•BK•BP	91.5	75	67	□65	16.5	35
	BC•BH•BM•BN	96.5	75	72	□65	21.5	40
	BL	101.5	75	77	□65	26.5	45

*1) Single reduction : 1/3 - 1/10

*2) Bushing will be inserted to adapt to motor shaft

For an explanation on the Adapter Flange Code, please turn to page 422.

A more comprehensive adapter flange offering can be found using the NIDEC-SHIMPO Online Selector Tool. The variety is constantly expanding and being updated on the Selector Tool. If you have any questions or need any support, contact NIDEC-SHIMPO.

VRL-050 – 2-Stage Adapter Dimensions

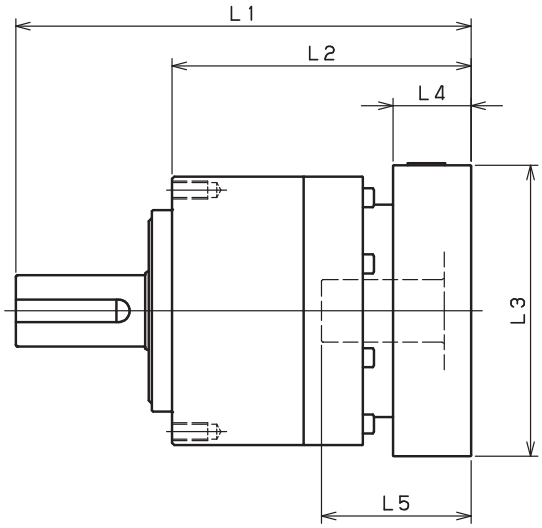

Model number	**: Adapter code	2-Stage					
		L1	L*	L2	L3	L4	L5
VRL-050-□-□-S8** (Input shaft bore ≦ φ8)	ZA•ZC•ZD•ZF•ZG•ZL•ZM•ZN•ZQ	105	89.5	80.5	□42	15.5	32
	ZB•ZE•ZH•ZJ•ZK	110	89.5	85.5	□42	20.5	37
	BA•BB•BD•BE•BG•BH•BJ	105	89.5	80.5	□60	15.5	32
	BC•BF	110	89.5	85.5	□60	20.5	37
VRL-050-□-□-14** (Input shaft bore ≦ φ14)	BA•BB•BD•BE•BF•BG•BJ•BK•BP	--	--	--	--	--	--
	BC•BH•BM•BN	--	--	--	--	--	--
	BL	--	--	--	--	--	--

*1) Double reduction : 1/15 - 1/100

*2) Bushing will be inserted to adapt to motor shaft

For an explanation on the Adapter Flange Code, please turn to page 422.

A more comprehensive adapter flange offering can be found using the NIDEC-SHIMPO Online Selector Tool. The variety is constantly expanding and being updated on the Selector Tool. If you have any questions or need any support, contact NIDEC-SHIMPO.

VRL-070 – 1-Stage Specifications

Frame Size	**070**									
Stage	**1-Stage**									
Ratio	Unit	Note	3	4	5	6	7	8	9	10
Nominal Output Torque	[Nm]	*1	18	27	27	27	27	27	18	18
Maximum Output Torque	[Nm]	*2	35	50	50	50	50	50	35	35
Emergency Stop Torque	[Nm]	*3	80	100	100	100	100	100	80	80
Nominal Input Speed	[rpm]	*4	3000							
Maximum Input Speed	[rpm]	*5	6000							
No Load Running Torque	[Nm]	*6	0.08							
Permitted Radial Load	[N]	*7	430	470	510	540	570	600	620	640
Permitted Axial Load	[N]	*8	310	360	390	430	460	480	510	530
Maximum Radial Load	[N]	*9	1200							
Maximum Axial Load	[N]	*10	1100							
Moment of Inertia (≤Ø 8)	[kgcm2]	--	0.140	0.095	0.077	0.068	0.062	0.059	0.057	0.056
Moment of Inertia (≤ Ø 14)	[kgcm2]	--	0.220	0.170	0.160	0.150	0.140	0.140	0.140	0.140
Moment of Inertia (≤ Ø 19)	[kgcm2]	--	0.430	0.380	0.360	0.360	0.350	0.350	0.340	0.340
Efficiency	[%]	*11	95							
Torsional Rigidity	[Nm/arcmin]	*12	3							
Maximum Torsional Backlash	[Arc-min]	--	≤ 5							
Noise Level	[dB]	*13	≤ 66							
Protection Class	--	*14	IP54 (IP65)							
Ambient Temperature	[°C]	--	0-40							
Permitted Housing Temperature	[°C]	--	90							
Weight	[kg]	*15	1.5							

VRL-070 – 2-Stage Specifications

Frame Size	**070**									
Stage	**2-Stage**									
Ratio	Unit	Note	15	16	20	25	28	30	35	40
Nominal Output Torque	[Nm]	*1	18	27	27	27	27	18	27	27
Maximum Output Torque	[Nm]	*2	35	50	50	50	50	35	50	50
Emergency Stop Torque	[Nm]	*3	80	100	100	100	100	80	100	100
Nominal Input Speed	[rpm]	*4	3000							
Maximum Input Speed	[rpm]	*5	6000							
No Load Running Torque	[Nm]	*6	0.04							
Permitted Radial Load	[N]	*7	740	750	810	870	910	930	980	1000
Permitted Axial Load	[N]	*8	630	650	720	790	830	860	920	970
Maximum Radial Load	[N]	*9	1200							
Maximum Axial Load	[N]	*10	1100							
Moment of Inertia (≤Ø 8)	[kgcm2]	--	0.055	0.057	0.054	0.053	0.055	0.049	0.053	0.049
Moment of Inertia (≤ Ø 14)	[kgcm2]	--	0.140	0.140	0.130	0.130	0.140	0.130	0.130	0.130
Moment of Inertia (≤ Ø 19)	[kgcm2]	--	0.350	0.360	0.350	0.350	0.360	0.340	0.350	0.340
Efficiency	[%]	*11	90							
Torsional Rigidity	[Nm/arcmin]	*12	3							
Maximum Torsional Backlash	[Arc-min]	--	≤ 5							
Noise Level	[dB]	*13	≤ 66							
Protection Class	--	*14	IP54 (IP65)							
Ambient Temperature	[°C]	--	0-40							
Permitted Housing Temperature	[°C]	--	90							
Weight	[kg]	*15	1.7							

VRL-070 – 2-Stage Specifications

Frame Size	**070**								
Stage	**2-Stage**								
Ratio	Unit	Note	45	50	60	70	80	90	100
Nominal Output Torque	[Nm]	*1	18	27	27	27	27	18	18
Maximum Output Torque	[Nm]	*2	35	50	50	50	50	35	35
Emergency Stop Torque	[Nm]	*3	80	100	100	100	100	80	80
Nominal Input Speed	[rpm]	*4	3000						
Maximum Input Speed	[rpm]	*5	6000						
No Load Running Torque	[Nm]	*6	0.04						
Permitted Radial Load	[N]	*7	1100	1100	1200	1200	1200	1200	1200
Permitted Axial Load	[N]	*8	1000	1100	1100	1100	1100	1100	1100
Maximum Radial Load	[N]	*9	1200						
Maximum Axial Load	[N]	*10	1100						
Moment of Inertia (≤Ø 8)	[kgcm2]	--	0.053	0.049	0.049	0.049	0.049	0.049	0.049
Moment of Inertia (≤ Ø 14)	[kgcm2]	--	0.130	0.130	0.130	0.130	0.130	0.13	0.13
Moment of Inertia (≤ Ø 19)	[kgcm2]	--	0.350	0.340	0.340	0.340	0.340	0.340	0.340
Efficiency	[%]	*11	90						
Torsional Rigidity	[Nm/arcmin]	*12	3						
Maximum Torsional Backlash	[Arc-min]	--	≤ 5						
Noise Level	[dB]	*13	≤ 66						
Protection Class	--	*14	IP54 (IP65)						
Ambient Temperature	[°C]	--	0-40						
Permitted Housing Temperature	[°C]	--	90						
Weight	[kg]	*15	1.7						

*1) At nominal input speed, service life is 20,000 hours
*2) The maximum torque when starting or stopping operation
*3) The maximum torque allowed under a stress situation (Permitted 1,000 times during service life)
*4) The average input speed
*5) The maximum intermittent input speed
*6) This is the torque at no load applied on the input shaft. The input speed is 3,000 rpm for VRL 070
*7) At this load and nominal input speed, service life will be 20,000 hours. (The radial load applied to the output side bearing)
*8) At this load and nominal input speed, service life will be 20,000 hours. (The axial load applied to the output shaft center)
*9) The maximum radial load that the reducer can accept
*10) The maximum axial load that the reducer can accept
*11) The efficiency at the nominal torque rating
*12) This does not include the lost motion
*13) Contact NIDEC-SHIMPO for the testing conditions and environment
*14) IP65 (wash-down) is available as an option. Contact NIDEC-SHIMPO for more details and our food grade options
*15) The weight may vary slightly between models

VRL-070 – 1-Stage Dimensions

Input shaft bore ≦φ8

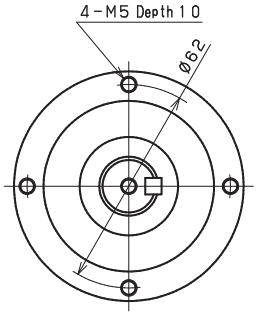

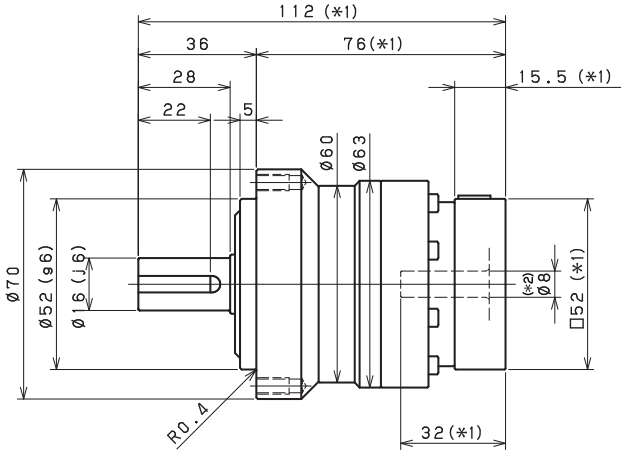

Input shaft bore ≦φ14

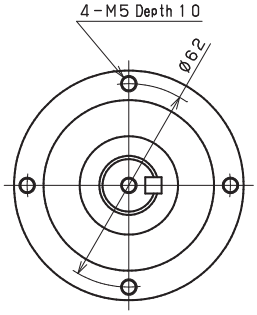

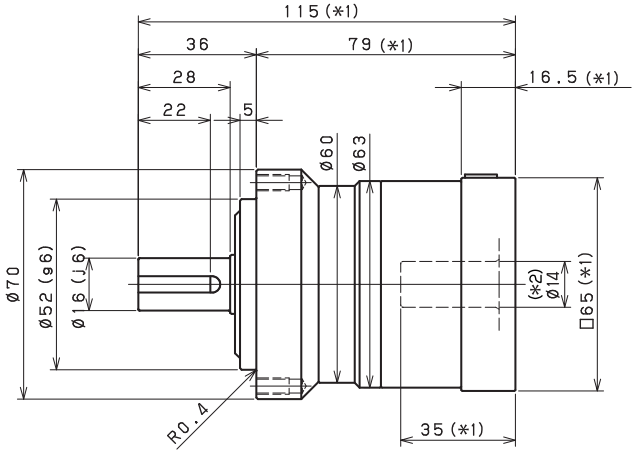

Input shaft bore ≦φ19

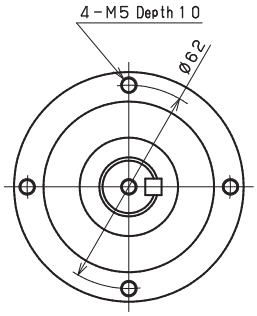

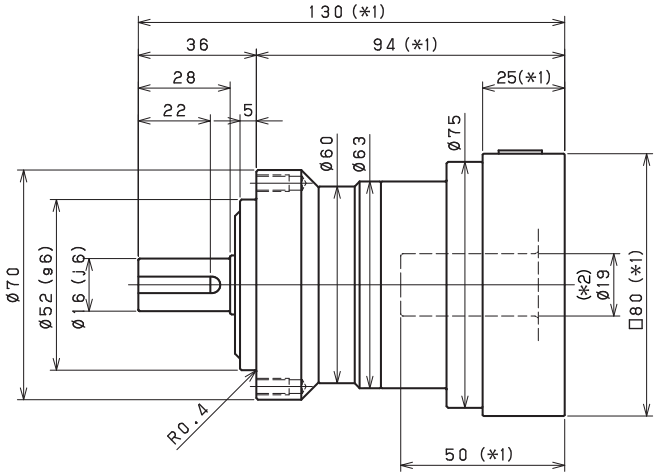

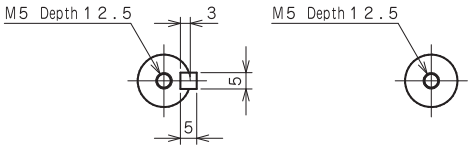

Shaft with key　　Smooth shaft

*1) Length will vary depending on motor

*2) Bushing will be inserted to adapt to motor shaft

VRL-070 – 2-Stage Dimensions

Input shaft bore ≦φ8

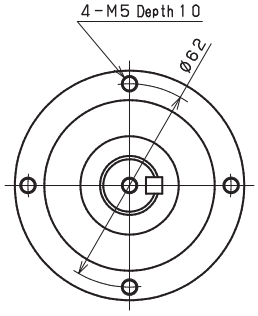

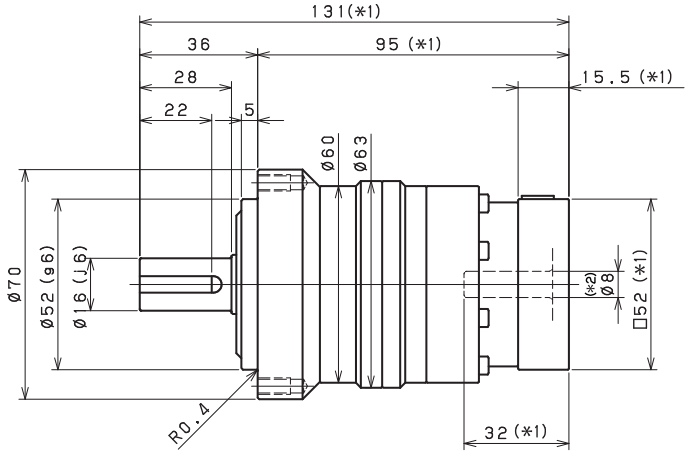

Input shaft bore ≦φ14

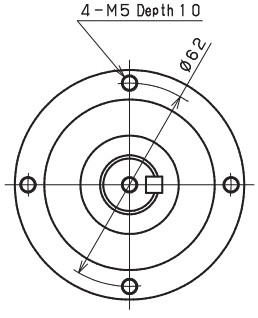

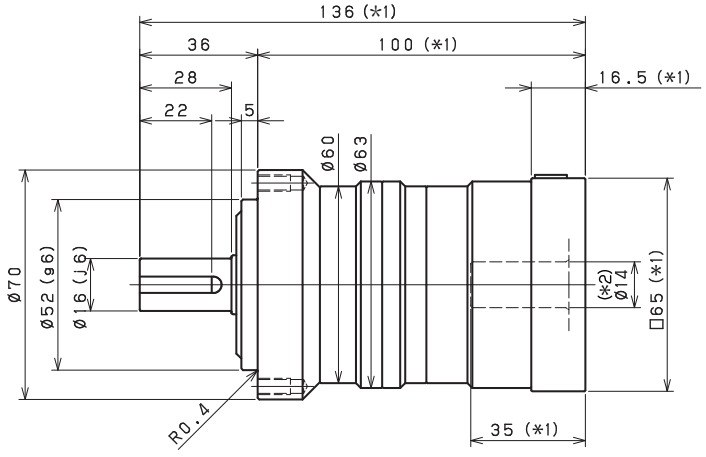

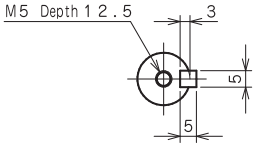

Shaft with key

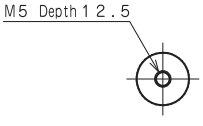

Smooth shaft

*1) Length will vary depending on motor

*2) Bushing will be inserted to adapt to motor shaft

VRL-070 – 1-Stage Adapter Dimensions

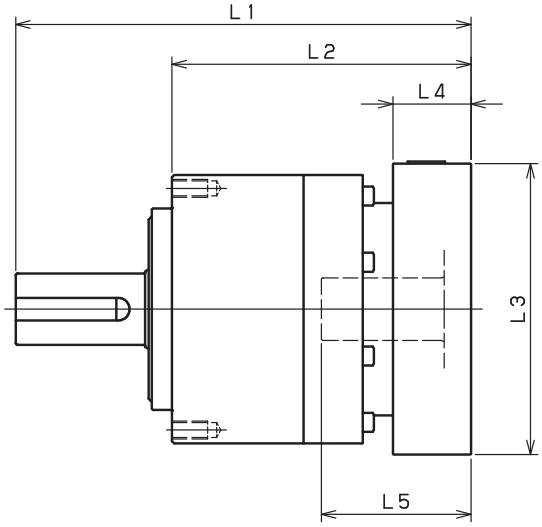

Model number	**: Adapter code	1-Stage					
		L1	L*	L2	L3	L4	L5
VRL-070-□-□-8** (Input shaft bore ≦ φ8)	AA•AC•AD•AF•AG•AL•AM•AN•AQ	112	96.5	76	□52	15.5	32
	AB•AE•AH•AJ•AK	117	96.5	81	□52	20.5	37
	BA•BB•BD•BE•BG•BH•BJ	112	96.5	76	□60	15.5	32
	BC•BF	117	96.5	81	□60	20.5	37
	CA	117	96.5	81	□70	20.5	37
VRL-070-□-□-14** (Input shaft bore ≦ φ14)	BA•BB•BD•BE•BF•BG•BH•BJ•BK•BP	115	98.5	79	□65	16.5	35
	BC•BH•BM•BN	120	98.5	84	□65	21.5	40
	BL	125	98.5	89	□65	26.5	45
	CA•CC	115	98.5	79	□70	16.5	35
	CB	120	98.5	84	□70	21.5	40
	DA•DB•DC•DD•DF•DH•DJ	115	98.5	79	□80	16.5	35
	DE•DL	120	98.5	84	□80	21.5	40
	DG•DK	125	98.5	89	□80	26.5	45
	EA•EB•EC•EF•EG•EK•EL	115	98.5	79	□90	16.5	35
	EJ•EM	120	98.5	84	□90	21.5	40
	ED•EE•EH	125	98.5	89	□90	26.5	45
	FA	115	98.5	79	□100	16.5	35
	FB	115	98.5	79	□115	16.5	35
VRL-070-□-□-19** (Input shaft bore ≦ φ19)	DA•DB•DC	130	105	94	□80	25	50
	DD	140	105	104	□80	35	60
	DE	135	105	99	□80	30	55
	EA	135	105	99	□90	30	55
	EB•ED	130	105	94	□90	25	50
	EC	140	105	104	□90	35	60
	FA	130	105	94	□100	25	50
	FB	140	105	104	□100	35	60

*1) Single reduction : 1/3~ 1/10

*2) Bushing will be inserted to adapt to motor shaft

For an explanation on the Adapter Flange Code, please turn to page 422.

A more comprehensive adapter flange offering can be found using the NIDEC-SHIMPO Online Selector Tool. The variety is constantly expanding and being updated on the Selector Tool. If you have any questions or need any support, contact NIDEC-SHIMPO.

VRL-070 – 2-Stage Adapter Dimensions

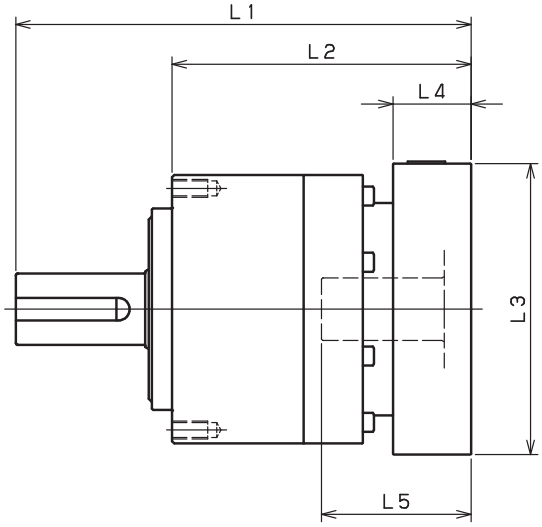

Model number	**: Adapter code	2-Stage					
		L1	L*	L2	L3	L4	L5
VRL-070-□-□-8** (Input shaft bore ≦ φ8)	AA•AC•AD•AF•AG•AL•AM•AN•AQ	131	115.5	95	□52	15.5	32
	AB•AE•AH•AJ•AK	136	115.5	100	□52	20.5	37
	BA•BB•BD•BE•BG•BH•BJ	131	115.5	95	□60	15.5	32
	BC•BF	136	115.5	100	□60	20.5	37
	CA	136	115.5	100	□70	20.5	37
VRL-070-□-□-14** (Input shaft bore ≦ φ14)	BA•BB•BD•BE•BF•BG•BH•BJ•BK•BP	136	119.5	100	□65	16.5	35
	BC•BH•BM•BN	141	119.5	105	□65	21.5	40
	BL	146	119.5	110	□65	26.5	45
	CA•CC	136	119.5	100	□70	16.5	35
	CB	141	119.5	105	□70	21.5	40
	DA•DB•DC•DD•DF•DH•DJ	136	119.5	100	□80	16.5	35
	DE•DL	141	119.5	105	□80	21.5	40
	DG•DK	146	119.5	110	□80	26.5	45
	EA•EB•EC•EF•EG•EK•EL	136	119.5	100	□90	16.5	35
	EJ•EM	141	119.5	105	□90	21.5	40
	ED•EE•EH	146	119.5	110	□90	26.5	45
	FA	136	119.5	100	□100	16.5	35
	FB	136	119.5	100	□115	16.5	35
VRL-070-□-□-19** (Input shaft bore ≦ φ19)	DA•DB•DC	151	126	115	□80	25	50
	DD	161	126	125	□80	35	60
	DE	156	126	120	□80	30	55
	EA	156	126	120	□90	30	55
	EB•ED	151	126	115	□90	25	50
	EC	161	126	125	□90	35	60
	FA	151	126	115	□100	25	50
	FB	161	126	125	□100	35	60

*1) Double reduction : 1/15~ 1/100

*2) Bushing will be inserted to adapt to motor shaft

For an explanation on the Adapter Flange Code, please turn to page 422.

A more comprehensive adapter flange offering can be found using the NIDEC-SHIMPO Online Selector Tool. The variety is constantly expanding and being updated on the Selector Tool. If you have any questions or need any support, contact NIDEC-SHIMPO.

VRL-090 – 1-Stage Specifications

Frame Size	**090**									
Stage	**1-Stage**									
Ratio	Unit	Note	3	4	5	6	7	8	9	10
Nominal Output Torque	[Nm]	*1	50	75	75	75	75	75	50	50
Maximum Acceleration Torque	[Nm]	*2	80	125	125	125	125	125	80	80
Emergency Stop Torque	[Nm]	*3	200	250	250	250	250	250	200	200
Nominal Input Speed	[rpm]	*4	3000							
Maximum Input Speed	[rpm]	*5	6000							
No Load Running Torque	[Nm]	*6	0.35							
Permitted Radial Load	[N]	*7	810	890	960	1000	1100	1100	1200	1200
Permitted Axial Load	[N]	*8	930	1100	1200	1300	1300	1400	1500	1600
Maximum Radial Load	[N]	*9	2400							
Maximum Axial Load	[N]	*10	2200							
Moment of Inertia (≤Ø 8)	[kgcm2]	--	--	--	--	--	--	--	--	--
Moment of Inertia (≤ Ø 14)	[kgcm2]	--	0.720	0.490	0.400	0.360	0.320	0.310	0.290	0.290
Moment of Inertia (≤ Ø 19)	--	--	1.200	0.950	0.860	0.820	0.790	0.770	0.760	0.750
Moment of Inertia (≤ Ø 28)	[kgcm2]	--	3.200	3.000	2.900	2.800	2.800	2.800	2.800	2.800
Efficiency	[%]	*11	95							
Torsional Rigidity	[Nm/arc-min]	*12	10							
Maximum Torsional Backlash	[arc-min]	--	≤ 5							
Noise Level	[dB]	*13	67							
Protection Class	--	*14	IP54 (IP65)							
Ambient Temperature	[°C]	--	0-40							
Permitted Housing Temperature	[°C]	--	90							
Weight	[kg]	*15	3.5							

VRL-090 – 2-Stage Specifications

Frame Size	**090**									
Stage	**2-Stage**									
Ratio	Unit	Note	15	16	20	25	28	30	35	40
Nominal Output Torque	[Nm]	*1	50	75	75	75	75	50	75	75
Maximum Acceleration Torque	[Nm]	*2	80	125	125	125	125	80	125	125
Emergency Stop Torque	[Nm]	*3	200	250	250	250	250	200	250	250
Nominal Input Speed	[rpm]	*4	3000							
Maximum Input Speed	[rpm]	*5	6000							
No Load Running Torque	[Nm]	*6	0.06							
Permitted Radial Load	[N]	*7	1400	1400	1500	1600	1700	1700	1800	1900
Permitted Axial Load	[N]	*8	1900	1900	2100	2200	2200	2200	2200	2200
Maximum Radial Load	[N]	*9	2400							
Maximum Axial Load	[N]	*10	2200							
Moment of Inertia (≤Ø 8)	[kgcm2]	--	0.130	0.150	0.130	0.120	0.140	0.100	0.120	0.099
Moment of Inertia (≤ Ø 14)	[kgcm2]	--	0.280	0.300	0.280	0.280	0.290	0.250	0.270	0.250
Moment of Inertia (≤ Ø 19)	--	--	0.720	0.740	0.720	0.710	0.730	0.700	0.710	0.700
Moment of Inertia (≤ Ø 28)	[kgcm2]	--	2.700	2.800	2.700	2.700	2.700	2.600	2.700	2.600
Efficiency	[%]	*11	90							
Torsional Rigidity	[Nm/arc-min]	*12	10							
Maximum Torsional Backlash	[arc-min]	--	≤ 5							
Noise Level	[dB]	*13	67							
Protection Class	--	*14	IP54 (IP65)							
Ambient Temperature	[°C]	--	0-40							
Permitted Housing Temperature	[°C]	--	90							
Weight	[kg]	*15	4							

VRL-090 – 2-Stage Specifications

Frame Size	**090**								
Stage	**2-Stage**								
Ratio	Unit	Note	45	50	60	70	80	90	100
Nominal Output Torque	[Nm]	*1	50	75	75	75	75	50	50
Maximum Acceleration Torque	[Nm]	*2	80	125	125	125	125	80	80
Emergency Stop Torque	[Nm]	*3	200	250	250	250	250	200	200
Nominal Input Speed	[rpm]	*4	3000						
Maximum Input Speed	[rpm]	*5	6000						
No Load Running Torque	[Nm]	*6	0.06						
Permitted Radial Load	[N]	*7	2000	2100	2200	2300	2400	2400	2400
Permitted Axial Load	[N]	*8	2200	2200	2200	2200	2200	2200	2200
Maximum Radial Load	[N]	*9	2400						
Maximum Axial Load	[N]	*10	2200						
Moment of Inertia (≤Ø 8)	[kgcm2]	--	0.120	0.098	0.098	0.097	0.097	0.097	0.097
Moment of Inertia (≤ Ø 14)	[kgcm2]	--	0.270	0.250	0.250	0.250	0.250	0.250	0.250
Moment of Inertia (≤ Ø 19)	--	--	0.710	0.690	0.690	0.690	0.690	0.690	0.690
Moment of Inertia (≤ Ø 28)	[kgcm2]	--	2.700	2.600	2.600	2.600	2.600	2.600	2.600
Efficiency	[%]	*11	90						
Torsional Rigidity	[Nm/arc-min]	*12	10						
Maximum Torsional Backlash	[arc-min]	--	≤ 5						
Noise Level	[dB]	*13	67						
Protection Class	--	*14	IP54 (IP65)						
Ambient Temperature	[°C]	--	0-40						
Permitted Housing Temperature	[°C]	--	90						
Weight	[kg]	*15	4						

*1) At nominal input speed, service life is 20,000 hours
*2) The maximum torque when starting or stopping operation
*3) The maximum torque allowed under a stress situation (Permitted 1,000 times during service life)
*4) The average input speed
*5) The maximum intermittent input speed
*6) This is the torque at no load applied on the input shaft. The input speed is 3,000 rpm for VRL 090
*7) At this load and nominal input speed, service life will be 20,000 hours. (The radial load applied to the output side bearing)
*8) At this load and nominal input speed, service life will be 20,000 hours. (The axial load applied to the output shaft center)
*9) The maximum radial load that the reducer can accept
*10) The maximum axial load that the reducer can accept
*11) The efficiency at the nominal torque rating
*12) This does not include the lost motion
*13) Contact NIDEC-SHIMPO for the testing conditions and environment
*14) IP65 (wash-down) is available as an option. Contact NIDEC-SHIMPO for more details and our food grade options
*15) The weight may vary slightly between models

VRL-090 – 1-Stage Dimensions

Input shaft bore ≦φ14

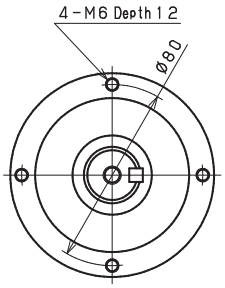

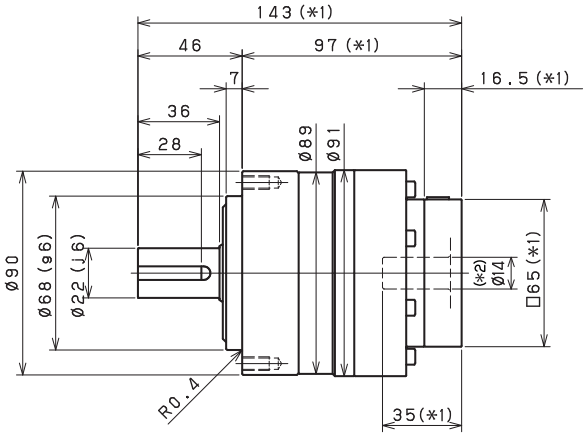

Input shaft bore ≦φ19

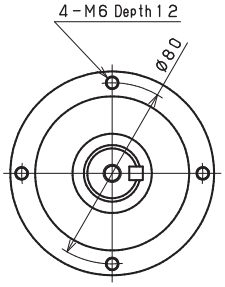

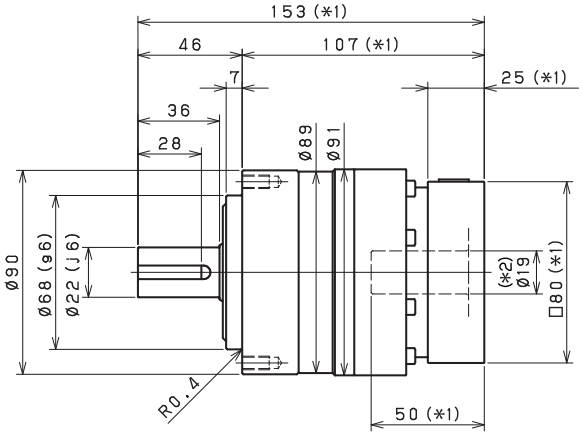

Input shaft bore ≦φ28

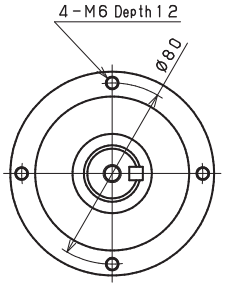

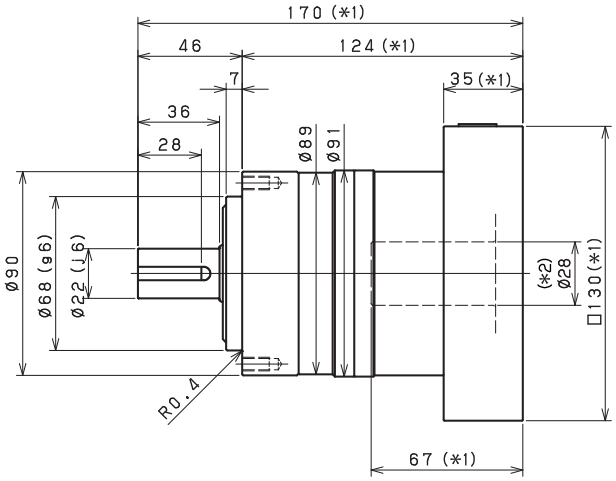

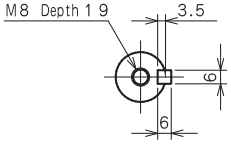

Shaft with key

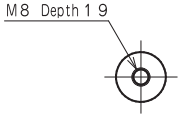

Smooth shaft

*1) Length will vary depending on motor

*2) Bushing will be inserted to adapt to motor shaft

VRL-090 – 2-Stage Dimensions

Input shaft bore ≦φ8

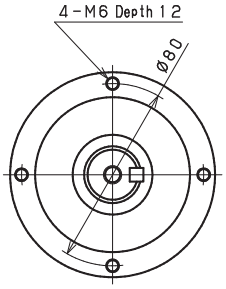

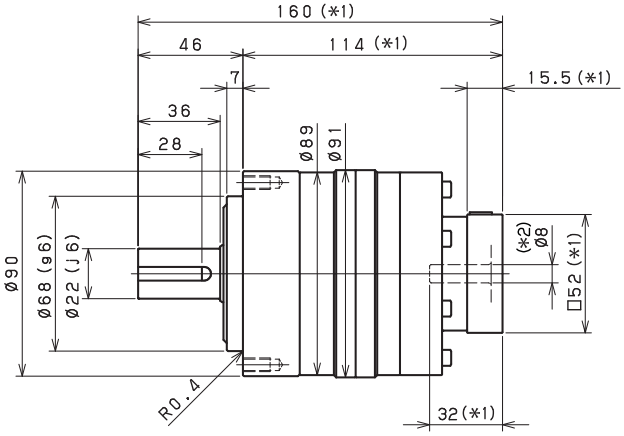

Input shaft bore ≦φ14

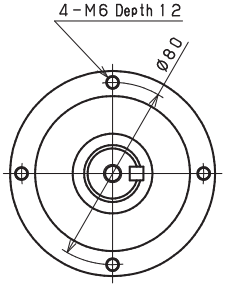

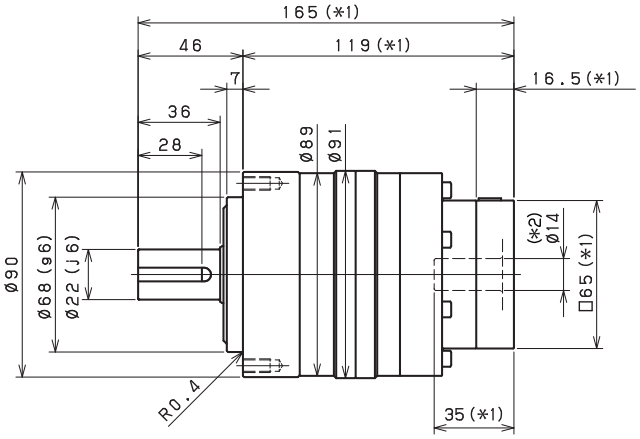

Input shaft bore ≦φ19

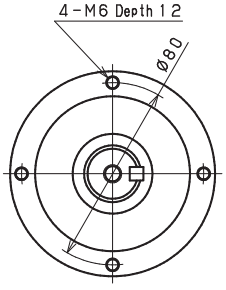

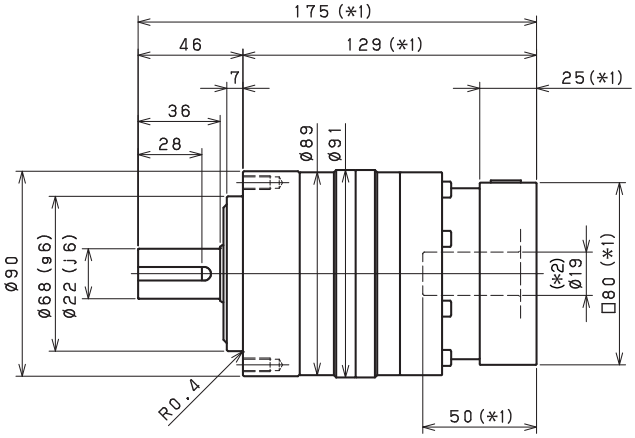

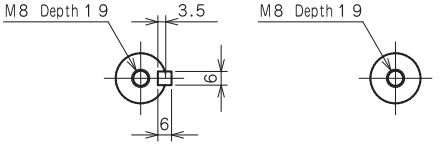

Shaft with key　　Smooth shaft

*1) Length will vary depending on motor

*2) Bushing will be inserted to adapt to motor shaft

VRL-090 – 1-Stage Adapter Dimensions

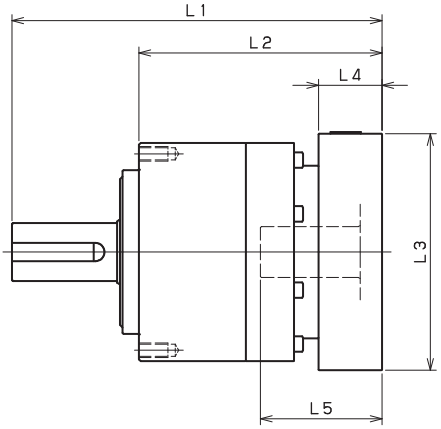

Model number	**: Adapter code	1-Stage					
		L1	L*	L2	L3	L4	L5
VRL-090-□-□-8** (Input shaft bore ≦ φ8)	AA•AC•AD•AF•AG•AL•AM•AN•AQ	--	--	--	--	--	--
	AB•AE•AH•AJ•AK	--	--	--	--	--	--
	BA•BB•BD•BE•BG•BH•BJ	--	-	--	--	-	--
	CA	--	--	--	--	--	--
VRL-090-□-□-14** (Input shaft bore ≦ φ14)	BA•BB•BD•BE•BF•BG•BH•BJ•BK•BP	143	126.5	97	□65	16.5	35
	BC•BH•BM•BN	148	126.5	102	□65	21.5	40
	CA•CC	143	126.5	97	□70	16.5	35
	DA•DB•DC•DD•DF•DH•DJ	143	126.5	97	□80	16.5	35
	EA•EB•EC•EF•EG•EK•EL	143	126.5	97	□90	16.5	35
	FA	143	126.5	97	□100	16.5	35
	FB	153	126.5	107	□100	26.5	45
	JA	158	126.5	112	□150	31.5	50
VRL-090-□-□-19** (Input shaft bore ≦ φ19)	DA•DB•DC	153	128	107	□80	25	50
	EB•ED	153	128	107	□90	25	50
	FA	153	128	107	□100	25	50
	FB	163	128	117	□100	35	60
	GA•GC•GH	158	128	112	□115	30	55
	GB•GD•GJ	153	128	107	□115	25	50
	GE•GF	163	128	117	□115	35	60
	HA	153	128	107	□130	25	50
	HB	168	128	122	□130	40	65
	HC•HD•HE	158	128	112	□130	30	55
	JA	163	128	117	□150	35	60
	JB	168	128	122	□150	40	65
VRL-090-□-□-28** (Input shaft bore ≦ φ28)	FA•FB•FC	170	135	124	□100	35	67
	FD•FE	165	135	119	□100	30	62
	GA•GB•GC•GD•GE•GF•GG•GH	170	135	124	□115	35	67
	HA•HC•HD	170	135	124	□130	35	67
	HB	180	135	134	□130	45	77
	HE	185	135	139	□130	50	82
	HF	165	135	119	□130	30	62
	JA•JB•JC•JF	170	135	124	□150	35	67
	JD	190	135	144	□150	55	87
	JE	180	135	134	□150	45	77

*1) Single reduction : 1/3~ 1/10 *2) Bushing will be inserted to adapt to motor shaft

For an explanation on the Adapter Flange Code, please turn to page 422.

A more comprehensive adapter flange offering can be found using the NIDEC-SHIMPO Online Selector Tool. The variety is constantly expanding and being updated on the Selector Tool. If you have any questions or need any support, contact NIDEC-SHIMPO.

VRL-090 – 2-Stage Adapter Dimensions

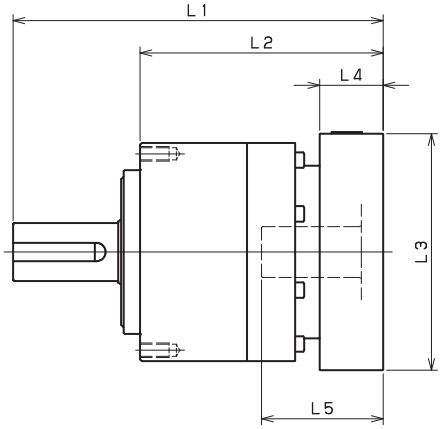

Model number	**: Adapter code	2-Stage					
		L1	L*	L2	L3	L4	L5
VRL-090-□-□-8** (Input shaft bore ≦ φ8)	AA•AC•AD•AF•AG•AL•AM•AN•AQ	160	144.5	114	□52	15.5	32
	AB•AE•AH•AJ•AK	165	144.5	119	□52	20.5	37
	BA•BB•BD•BE•BG•BH•BJ	160	144.5	114	□60	15.5	32
	CA	165	144.5	119	□70	20.5	37
VRL-090-□-□-14** (Input shaft bore ≦ φ14)	BA•BB•BD•BE•BF•BG•BH•BJ•BK•BP	165	148.5	119	□65	16.5	35
	BC•BH•BM•BN	170	148.5	124	□65	21.5	40
	CA•CC	165	148.5	119	□70	16.5	35
	DA•DB•DC•DD•DF•DH•DJ	165	148.5	119	□80	16.5	35
	EA•EB•EC•EF•EG•EK•EL	165	148.5	119	□90	16.5	35
	FA	165	148.5	119	□100	16.5	35
	FB	175	148.5	129	□100	26.5	45
	JA	180	148.5	134	□150	31.5	50
VRL-090-□-□-19** (Input shaft bore ≦ φ19)	DA•DB•DC	175	150	129	□80	25	50
	EB•ED	175	150	129	□90	25	50
	FA	175	150	129	□100	25	50
	FB	185	150	139	□100	35	60
	GA•GC•GH	180	150	134	□115	30	55
	GB•GD•GJ	175	150	129	□115	25	50
	GE•GF	185	150	139	□115	35	60
	HA	175	150	129	□130	25	50
	HB	190	150	144	□130	40	65
	HC•HD•HE	180	150	134	□130	30	55
	JA	185	150	139	□150	35	60
	JB	190	150	144	□150	40	65
VRL-090-□-□-28** (Input shaft bore ≦ φ28)	FA•FB•FC	194	159	148	□100	35	67
	FD•FE	189	159	143	□100	30	62
	GA•GB•GC•GD•GE•GF•GG•GH	194	159	148	□115	35	67
	HA•HC•HD	194	159	148	□130	35	67
	HB	204	159	158	□130	45	77
	HE	209	159	163	□130	50	82
	HF	189	159	143	□130	30	62
	JA•JB•JC•JF	194	159	148	□150	35	67
	JD	214	159	168	□150	55	87
	JE	204	159	158	□150	45	n

*1) Double reduction : 1/15~ 1/100 *2) Bushing will be inserted to adapt to motor shaft

For an explanation on the Adapter Flange Code, please turn to page 422.

A more comprehensive adapter flange offering can be found using the NIDEC-SHIMPO Online Selector Tool. The variety is constantly expanding and being updated on the Selector Tool. If you have any questions or need any support, contact NIDEC-SHIMPO.

VRL-120 – 1-Stage Specifications

Frame Size	**120**									
Stage	**1-Stage**									
Ratio	Unit	Note	3	4	5	6	7	8	9	10
Nominal Output Torque	[Nm]	*1	120	120	180	180	180	180	120	120
Maximum Output Torque	[Nm]	*2	225	330	330	330	330	330	225	225
Emergency Stop Torque	[Nm]	*3	500	625	625	625	625	625	500	500
Nominal Input Speed	[rpm]	*4	3000							
Maximum Input Speed	[rpm]	*5	6000							
No Load Running Torque	[Nm]	*14	1.30							
Permitted Radial Load	[N]	*6	1300	1500	1600	1700	1800	1900	1900	2000
Permitted Axial Load	[N]	*7	1500	1700	1900	2000	2100	2300	2400	2500
Maximum Radial Load	[N]	*8	4300							
Maximum Axial Load	[N]	*9	3900							
Moment of Inertia (≤Ø 14)	[kgcm2]		--	--	--	--	--	--	--	--
Moment of Inertia (≤ Ø 19)	[kgcm2]		3.300	2.000	1.600	1.300	1.100	1.000	0.980	0.950
Moment of Inertia (≤ Ø 28)	[kgcm2]		5.300	4.100	3.600	3.300	3.200	3.100	3.000	3.000
Moment of Inertia (≤ Ø 38)	[kgcm2]		13.000	12.000	11.000	11.000	11.000	11.000	11.000	11.000
Efficiency	[%]	*11	95							
Torsional Rigidity	[Nm/arc-min]	*12	31							
Maximum Torsional Backlash	[arc-min]	--	≤ 5							
Noise Level	[dB]	*13	71							
Protection Class		*15	IP54 (IP65)							
Ambient Temperature	[°C]		0-40							
Permitted Housing Temperature	[°C]	*16	90							
Weight	[kg]	*10	7.8							

VRL-120 – 2-Stage Specifications

Frame Size	**120**									
Stage	**2-Stage**									
Ratio	Unit	Note	15	16	20	25	28	30	35	40
Nominal Output Torque	[Nm]	*1	120	180	180	180	180	120	180	180
Maximum Output Torque	[Nm]	*2	225	330	330	330	330	225	330	330
Emergency Stop Torque	[Nm]	*3	500	625	625	625	625	500	625	625
Nominal Input Speed	[rpm]	*4	3000							
Maximum Input Speed	[rpm]	*5	6000							
No Load Running Torque	[Nm]	*14	0.42							
Permitted Radial Load	[N]	*6	2300	2300	2500	2700	2800	2900	3000	3200
Permitted Axial Load	[N]	*7	3000	3100	3400	3700	3900	3900	3900	3900
Maximum Radial Load	[N]	*8	4300							
Maximum Axial Load	[N]	*9	3900							
Moment of Inertia (≤Ø 14)	[kgcm2]		0.430	0.480	0.400	0.380	0.440	0.290	0.370	0.280
Moment of Inertia (≤ Ø 19)	[kgcm2]		0.860	0.920	0.830	0.820	0.880	0.740	0.810	0.730
Moment of Inertia (≤ Ø 28)	[kgcm2]		2.800	2.900	2.800	2.800	2.800	2.700	2.700	2.700
Moment of Inertia (≤ Ø 38)	[kgcm2]		--	--	--	--	--	--	--	--
Efficiency	[%]	*11	90							
Torsional Rigidity	[Nm/arc-min]	*12	31							
Maximum Torsional Backlash	[arc-min]	--	≤ 5							
Noise Level	[dB]	*13	71							
Protection Class		*15	IP54 (IP65)							
Ambient Temperature	[°C]		0-40							
Permitted Housing Temperature	[°C]	*16	90							
Weight	[kg]	*10	8.7							

VRL-120 – 2-Stage Specifications

Frame Size	**120**								
Stage	**2-Stage**								
Ratio	Unit	Note	45	50	60	70	80	90	100
Nominal Output Torque	[Nm]	*1	120	180	180	180	180	120	120
Maximum Output Torque	[Nm]	*2	225	330	330	330	330	225	225
Emergency Stop Torque	[Nm]	*3	500	625	625	625	625	500	500
Nominal Input Speed	[rpm]	*4	3000						
Maximum Input Speed	[rpm]	*5	6000						
No Load Running Torque	[Nm]	*14	0.42						
Permitted Radial Load	[N]	*6	3300	3400	3600	3800	4000	4200	4300
Permitted Axial Load	[N]	*7	3900	3900	3900	3900	3900	3900	3900
Maximum Radial Load	[N]	*8	4300						
Maximum Axial Load	[N]	*9	3900						
Moment of Inertia (≤Ø 14)	[kgcm2]		0.370	0.280	0.280	0.280	0.280	0.270	0.270
Moment of Inertia (≤ Ø 19)	[kgcm2]		0.800	0.730	0.730	0.730	0.730	0.730	0.730
Moment of Inertia (≤ Ø 28)	[kgcm2]		2.700	2.700	2.700	2.700	2.700	2.700	2.700
Moment of Inertia (≤ Ø 38)	[kgcm2]		--	--	--	--	--	--	--
Efficiency	[%]	*11	90						
Torsional Rigidity	[Nm/arc-min]	*12	31						
Maximum Torsional Backlash	[arc-min]	--	≤ 5						
Noise Level	[dB]	*13	71						
Protection Class		*15	IP54 (IP65)						
Ambient Temperature	[°C]		0-40						
Permitted Housing Temperature	[°C]	*16	90						
Weight	[kg]	*10	8.7						

*1) At nominal input speed, service life is 20,000 hours

*2) The maximum torque when starting or stopping operation

*3) The maximum torque allowed under a stress situation (Permitted 1,000 times during service life)

*4) The average input speed

*5) The maximum intermittent input speed

*6) This is the torque at no load applied on the input shaft. The input speed is 3,000 rpm for VRL 120

*7) At this load and nominal input speed, service life will be 20,000 hours. (The radial load applied to the output side bearing)

*8) At this load and nominal input speed, service life will be 20,000 hours. (The axial load applied to the output shaft center)

*9) The maximum radial load that the reducer can accept

*10) The maximum axial load that the reducer can accept

*11) The efficiency at the nominal torque rating

*12) This does not include the lost motion

*13) Contact NIDEC-SHIMPO for the testing conditions and environment

*14) IP65 (wash-down) is available as an option. Contact NIDEC-SHIMPO for more details and our food grade options

*15) The weight may vary slightly between models

VRL-120 – 1-Stage Dimensions

Input shaft bore ≦φ19

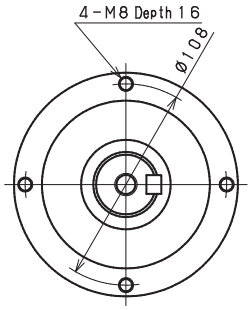

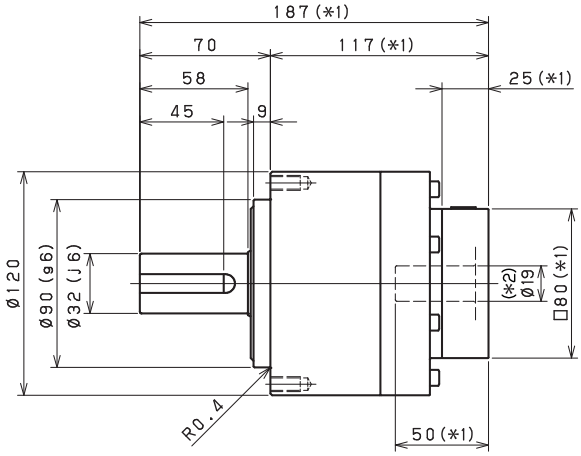

Input shaft bore ≦φ28

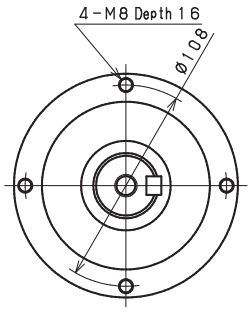

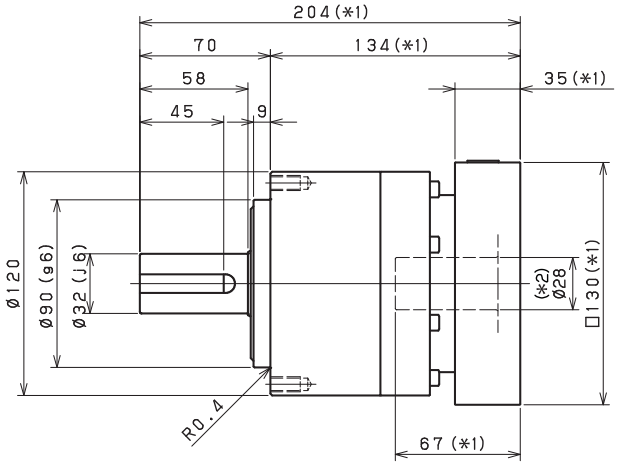

Input shaft bore ≦φ38

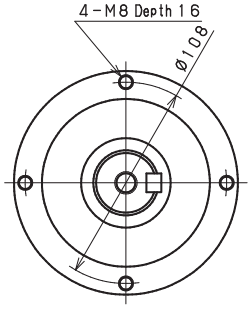

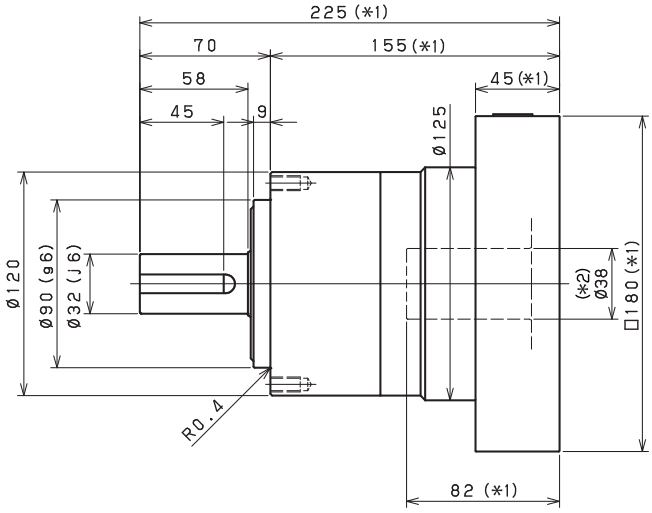

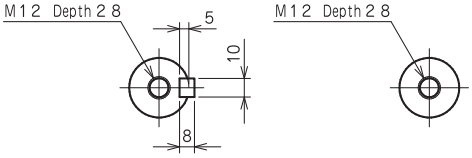

Shaft with key

Smooth shaft

*1) Length will vary depending on motor

*2) Bushing will be inserted to adapt to motor shaft

VRL-120 – 2-Stage Dimensions

Input shaft bore ≦φ14

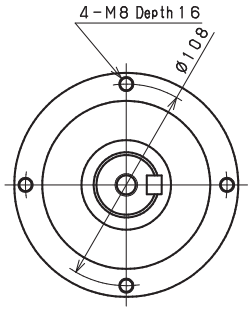

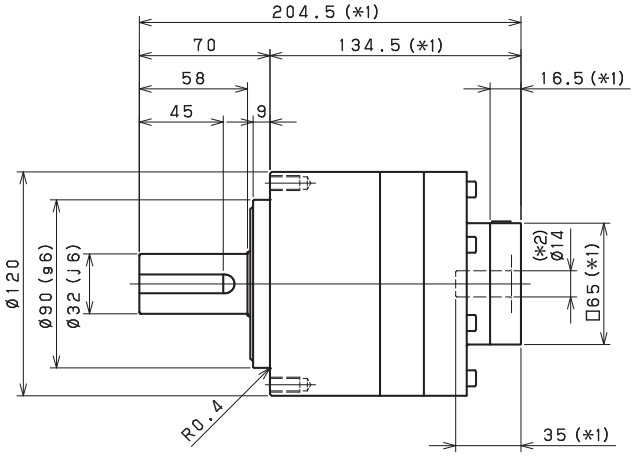

Input shaft bore ≦φ19

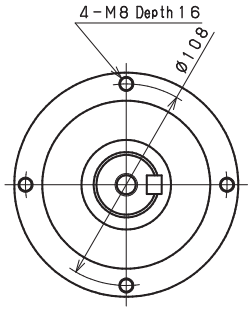

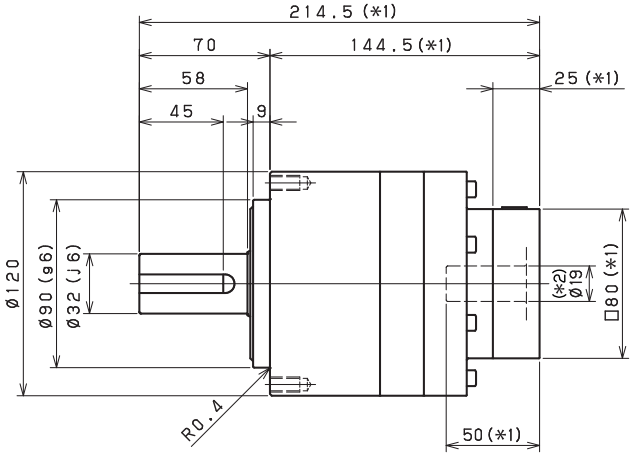

Input shaft bore ≦φ28

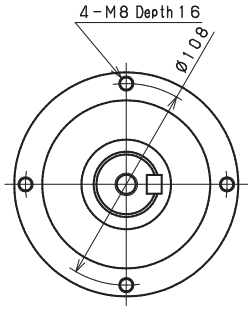

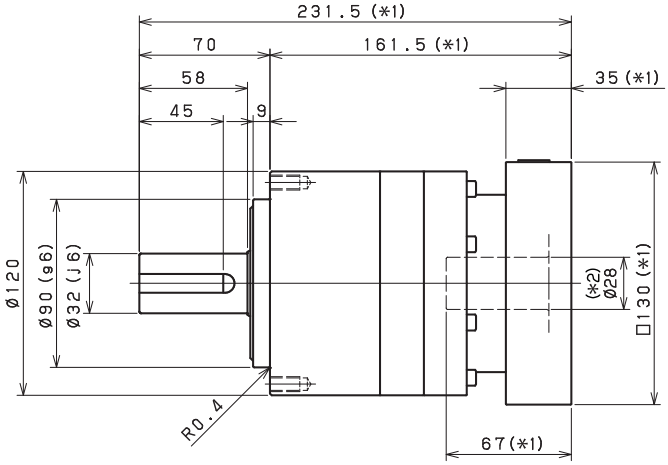

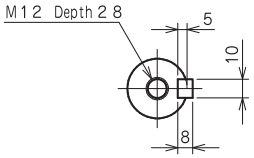

Shaft with key

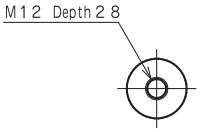

Smooth shaft

*1) Length will vary depending on motor

*2) Bushing will be inserted to adapt to motor shaft

VRL-120 – 1-Stage Adapter Dimensions

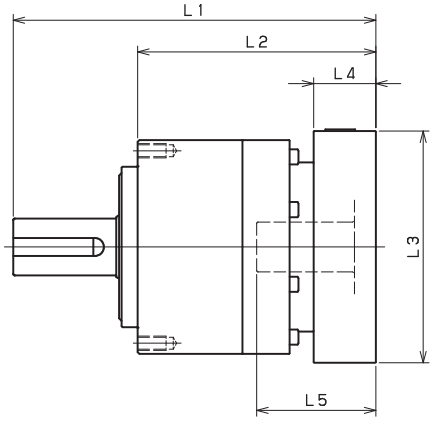

Model number	**: Adapter code	1-Stage					
		L1	L*	L2	L3	L4	L5
VRL-120-□-□-14** (Input shaft bore ≦ φ14)	BA•BB•BD•BE•BF•BG•BH•BJ•BK•BP	--	--	--	--	--	--
	BC•BH•BM•BN	--	--	--	--	--	--
	CA•CC	--	--	--	--	--	--
	DA•DB•DC•DD•DF•DH•DJ	--	--	--	--	--	--
	EA•EB•EC•EF•EG•EK•EL	--	--	--	--	--	--
	FA	--	--	--	--	--	--
	FB	--	--	--	--	--	--
	JA	--	--	--	--	--	--
VRL-120-□-□-19** (Input shaft bore ≦ φ19)	DA•DB•DC	187	162	117	□80	25	50
	EB	187	162	117	□90	25	50
	FA	187	162	117	□100	25	50
	FB	197	162	127	□100	35	60
	GB•GD	187	162	117	□115	25	50
	HA	197	162	127	□115	35	60
	--	187	162	117	□130	25	50
	--	202	162	132	□130	40	65
	--	192	162	122	□130	30	55
	HB	197	162	127	□150	35	60
	HC•HD•HE	202	162	132	□150	40	65
VRL-120-□-□-28** (Input shaft bore ≦ φ28)	FA•FB•FC	204	169	134	□100	35	67
	GA•GB•GC•GD•GE•GF•GG•GH	204	169	134	□115	35	67
	HA•HC•HD	204	169	134	□130	35	67
	HB	214	169	144	□130	45	77
	HF	199	169	129	□130	30	62
	JA•JB•JC•JF	204	169	134	□150	35	67
	JE	214	169	144	□150	45	77
	KA•KB•KE	204	169	134	□180	35	67
	KD	214	169	144	□180	45	77
VRL-120-□-□-38** (Input shaft bore ≦ φ38)	HA	225	180	155	□130	45	82
	HB•HE	220	180	150	□130	40	77
	JA	225	180	155	□150	45	82
	KA•KB•KC	225	180	155	□180	45	82
	KD	260	180	190	□180	80	117
	KE	240	180	170	□180	60	97

*1) Single reduction : 1/3~ 1/10 *2) Bushing will be inserted to adapt to motor shaft

For an explanation on the Adapter Flange Code, please turn to page 422.

A more comprehensive adapter flange offering can be found using the NIDEC-SHIMPO Online Selector Tool. The variety is constantly expanding and being updated on the Selector Tool. If you have any questions or need any support, contact NIDEC-SHIMPO.

VRL-120 – 2-Stage Adapter Dimensions

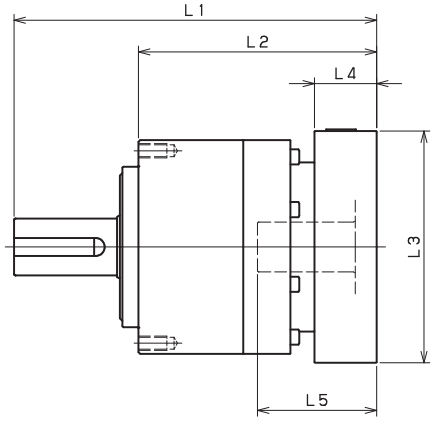

Model number	**: Adapter code	2-Stage					
		L1	L*	L2	L3	L4	L5
VRL-120-□-□-14** (Input shaft bore ≦ φ14)	BA•BB•BD•BE•BF•BG•BH•BJ•BK•BP	204.5	188	134.5	□65	16.5	35
	BC•BH•BM•BN	209.5	188	139.5	□65	21.5	40
	CA•CC	204.5	188	134.5	□70	16.5	35
	DA•DB•DC•DD•DF•DH•DJ	204.5	188	134.5	□80	16.5	35
	EA•EB•EC•EF•EG•EK•EL	204.5	188	134.5	□90	16.5	35
	FA	204.5	188	134.5	□100	16.5	35
	FB	214.5	188	144.5	□100	26.5	45
	JA	219.5	188	149.5	□150	31.5	50
VRL-120-□-□-19** (Input shaft bore ≦ φ19)	DA•DB•DC	214.5	189.5	144.5	□80	25	50
	EB	214.5	189.5	144.5	□90	25	50
	FA	214.5	189.5	144.5	□100	25	50
	FB	224.5	189.5	154.5	□100	35	60
	GB•GD	214.5	189.5	144.5	□115	25	50
	HA	224.5	189.5	154.5	□115	35	60
	--	214.5	189.5	144.5	□130	25	50
	--	229.5	189.5	159.5	□130	40	65
	--	219.5	189.5	149.5	□130	30	55
	HB	224.5	189.5	154.5	□150	35	60
	HC•HD•HE	229.5	189.5	159.5	□150	40	65
VRL-120-□-□-28** (Input shaft bore ≦ φ28)	FA•FB•FC	231.5	196.5	161.5	□100	35	67
	GA•GB•GC•GD•GE•GF•GG•GH	231.5	196.5	161.5	□115	35	67
	HA•HC•HD	231.5	196.5	161.5	□130	35	67
	HB	241.5	196.5	171.5	□130	45	77
	HF	226.5	196.5	156.5	□130	30	62
	JA•JB•JC•JF	231.5	196.5	161.5	□150	35	67
	JE	241.5	196.5	171.5	□150	45	77
	KA•KB•KE	231.5	196.5	161.5	□180	35	67
	KD	241.5	196.5	171.5	□180	45	77
VRL-120-□-□-38** (Input shaft bore ≦ φ38)	HA	249	204	179	□130	45	82
	HB•HE	244	204	174	□130	40	77
	JA	249	204	179	□150	45	82
	KA•KB•KC	249	204	179	□180	45	82
	KD	284	204	214	□180	80	117
	KE	264	204	194	□180	60	97

*1) Double reduction : 1/15~ 1/100 *2) Bushing will be inserted to adapt to motor shaft

For an explanation on the Adapter Flange Code, please turn to page 422.

A more comprehensive adapter flange offering can be found using the NIDEC-SHIMPO Online Selector Tool. The variety is constantly expanding and being updated on the Selector Tool. If you have any questions or need any support, contact NIDEC-SHIMPO.

VRL-155 – 1-Stage Specifications

Frame Size	**155**									
Stage	**1-Stage**									
Ratio	Unit	Note	3	4	5	6	7	8	9	10
Nominal Output Torque	[Nm]	*1	240	240	360	360	360	360	240	240
Maximum Acceleration Torque	[Nm]	*2	470	700	700	700	700	700	470	470
Emergency Stop Torque	[Nm]	*3	1000	1250	1250	1250	1250	1250	1000	1000
Nominal Input Speed	[rpm]	*4	2000							
Maximum Input Speed	[rpm]	*5	4000							
No Load Running Torque	[Nm]	*6	1.63							
Permitted Radial Load	[N]	*7	3200	3500	3800	4000	4200	4400	4600	4700
Permitted Axial Load	[N]	*8	2400	2700	3000	3300	3500	3700	3900	4100
Maximum Radial Load	[N]	*9	9100							
Maximum Axial Load	[N]	*10	8200							
Moment of Inertia (≤Ø 19)	[kgcm2]	--	--	--	--	--	--	--	--	--
Moment of Inertia (≤ Ø 28)	[kgcm2]	--	12.000	7.500	5.800	4.900	4.100	3.800	3.600	3.500
Moment of Inertia (≤ Ø 38)	[kgcm2]	--	20.000	15.000	14.000	13.000	12.000	12.000	11.000	11.000
Moment of Inertia (≤ Ø 48)	[kgcm2]	--	42.000	37.000	36.000	35.000	34.000	34.000	34.000	34.000
Efficiency	[%]	*11	95							
Torsional Rigidity	[Nm/arc-min]	*12	60							
Maximum Torsional Backlash	[arc-min]	--	≤ 5							
Noise Level	[dB]	*13	67							
Protection Class	--	*14	IP54 (IP65)							
Ambient Temperature	[°C]	--	0-40							
Permitted Housing Temperature	[°C]	--	90							
Weight	[kg]	*15	16							

VRL-155 – 2-Stage Specifications

Frame Size	**155**									
Stage	**2-Stage**									
Ratio	Unit	Note	15	16	20	25	28	30	35	40
Nominal Output Torque	[Nm]	*1	240	360	360	360	360	240	360	360
Maximum Acceleration Torque	[Nm]	*2	470	700	700	700	700	470	700	700
Emergency Stop Torque	[Nm]	*3	1000	1250	1250	1250	1250	1000	1250	1250
Nominal Input Speed	[rpm]	*4	2000							
Maximum Input Speed	[rpm]	*5	4000							
No Load Running Torque	[Nm]	*6	0.56							
Permitted Radial Load	[N]	*7	5400	5500	6000	6400	6700	6800	7200	7500
Permitted Axial Load	[N]	*8	4900	5000	5500	6100	6400	6600	7000	7500
Maximum Radial Load	[N]	*9	9100							
Maximum Axial Load	[N]	*10	8200							
Moment of Inertia (≤Ø 19)	[kgcm2]	--	1.300	1.500	1.200	1.100	1.400	0.850	1.100	0.830
Moment of Inertia (≤ Ø 28)	[kgcm2]	--	3.200	3.500	3.100	3.100	3.300	2.800	3.100	2.800
Moment of Inertia (≤ Ø 38)	[kgcm2]	--	11.000	11.000	11.000	11.000	11.000	10.000	11.000	10.000
Moment of Inertia (≤ Ø 48)	[kgcm2]	--	--	--	--	--	--	--	--	--
Efficiency	[%]	*11	90							
Torsional Rigidity	[Nm/arc-min]	*12	60							
Maximum Torsional Backlash	[arc-min]	--	≤ 5							
Noise Level	[dB]	*13	67							
Protection Class	--	*14	IP54 (IP65)							
Ambient Temperature	[°C]	--	0-40							
Permitted Housing Temperature	[°C]	--	90							
Weight	[kg]	*15	18							

VRL-155 – 2-Stage Specifications

Frame Size	**155**								
Stage	**2-Stage**								
Ratio	Unit	Note	45	50	60	70	80	90	100
Nominal Output Torque	[Nm]	*1	240	360	360	360	360	240	240
Maximum Acceleration Torque	[Nm]	*2	470	700	700	700	700	470	470
Emergency Stop Torque	[Nm]	*3	1000	1250	1250	1250	1250	1000	1000
Nominal Input Speed	[rpm]	*4	2000						
Maximum Input Speed	[rpm]	*5	4000						
No Load Running Torque	[Nm]	*6	0.56						
Permitted Radial Load	[N]	*7	7800	8100	8600	9100	9100	9100	9100
Permitted Axial Load	[N]	*8	7900	8200	8200	8200	8200	8200	8200
Maximum Radial Load	[N]	*9	9100						
Maximum Axial Load	[N]	*10	8200						
Moment of Inertia (≤Ø 19)	[kgcm2]	--	1.100	0.810	0.810	0.800	0.800	0.800	0.800
Moment of Inertia (≤ Ø 28)	[kgcm2]	--	3.000	2.800	2.800	2.800	2.800	2.800	2.800
Moment of Inertia (≤ Ø 38)	[kgcm2]	--	11.000	10.000	10.000	10.000	10.000	10.000	10.000
Moment of Inertia (≤ Ø 48)	[kgcm2]	--	--	--	--	--	--	--	--
Efficiency	[%]	*11	90						
Torsional Rigidity	[Nm/arc-min]	*12	60						
Maximum Torsional Backlash	[arc-min]	--	≤ 5						
Noise Level	[dB]	*13	67						
Protection Class	--	*14	IP54 (IP65)						
Ambient Temperature	[°C]	--	0-40						
Permitted Housing Temperature	[°C]	--	90						
Weight	[kg]	*15	18						

*1) At nominal input speed, service life is 20,000 hours
*2) The maximum torque when starting or stopping operation
*3) The maximum torque allowed under a stress situation (Permitted 1,000 times during service life)
*4) The average input speed
*5) The maximum intermittent input speed
*6) This is the torque at no load applied on the input shaft. The input speed is 2,000 rpm for VRL155
*7) At this load and nominal input speed, service life will be 20,000 hours. (The radial load applied to the output side bearing)
*8) At this load and nominal input speed, service life will be 20,000 hours. (The axial load applied to the output shaft center)
*9) The maximum radial load that the reducer can accept
*10) The maximum axial load that the reducer can accept
*11) The efficiency at the nominal torque rating
*12) This does not include the lost motion
*13) Contact NIDEC-SHIMPO for the testing conditions and environment
*14) IP65 (wash-down) is available as an option. Contact NIDEC-SHIMPO for more details and our food grade options
*15) The weight may vary slightly between models

VRL-155 – 1-Stage Dimensions

Input shaft bore ≦φ28

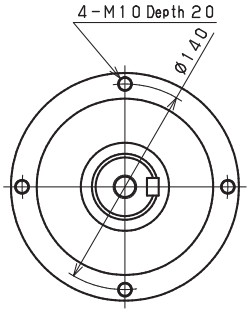

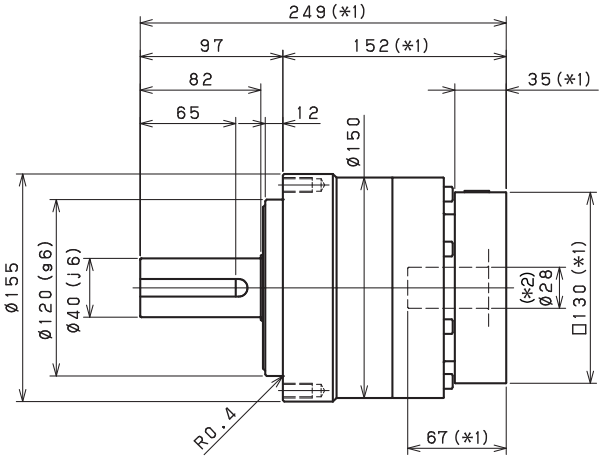

Input shaft bore ≦φ38

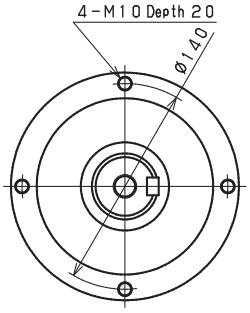

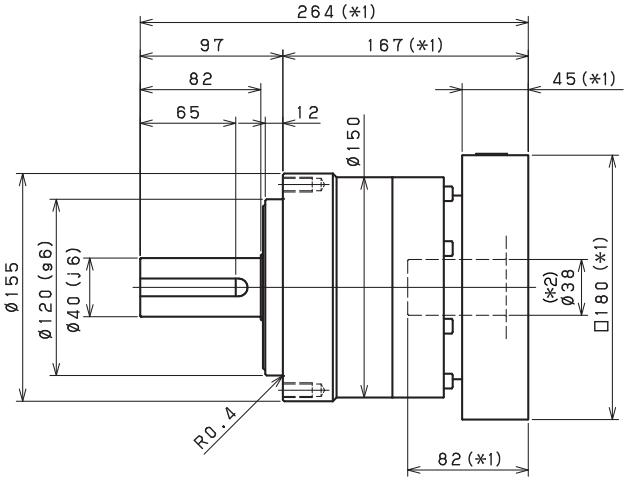

Input shaft bore ≦φ48

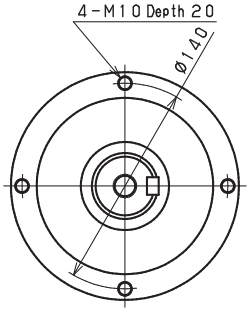

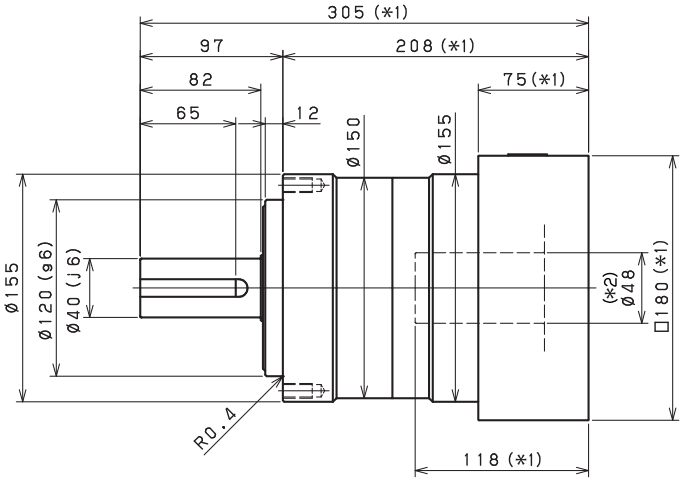

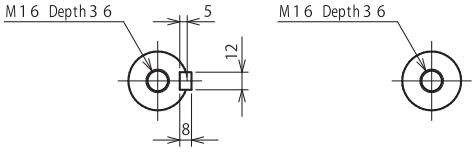

Shaft with key　　Smooth shaft

*1) Length will vary depending on motor

*2) Bushing will be inserted to adapt to motor shaft

VRL-155 – 2-Stage Dimensions

Input shaft bore ≦φ19

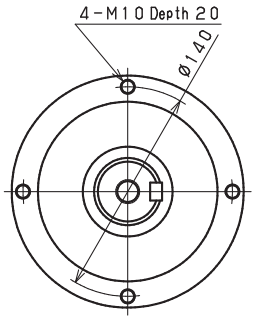

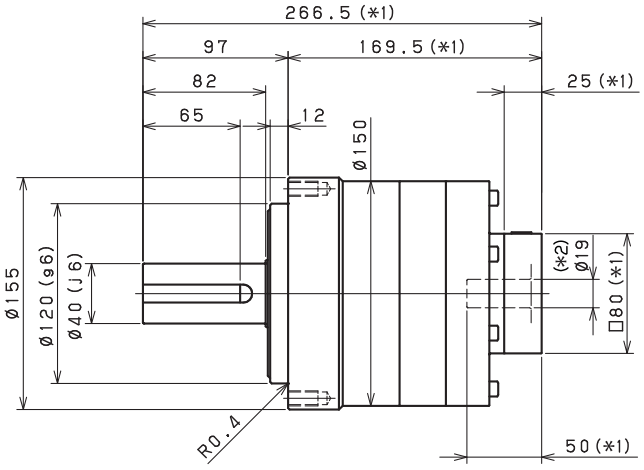

Input shaft bore ≦φ28

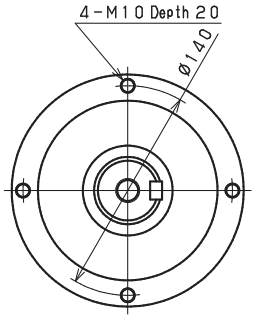

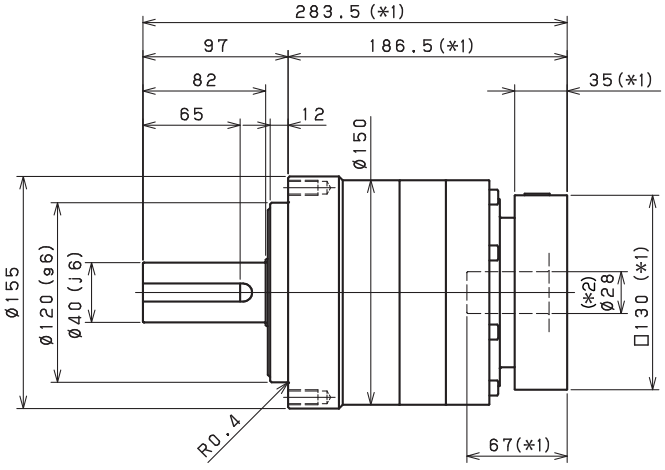

Input shaft bore ≦φ38

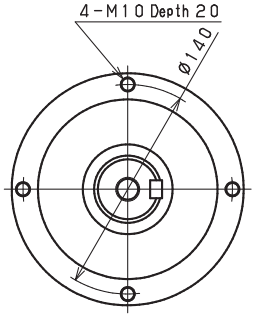

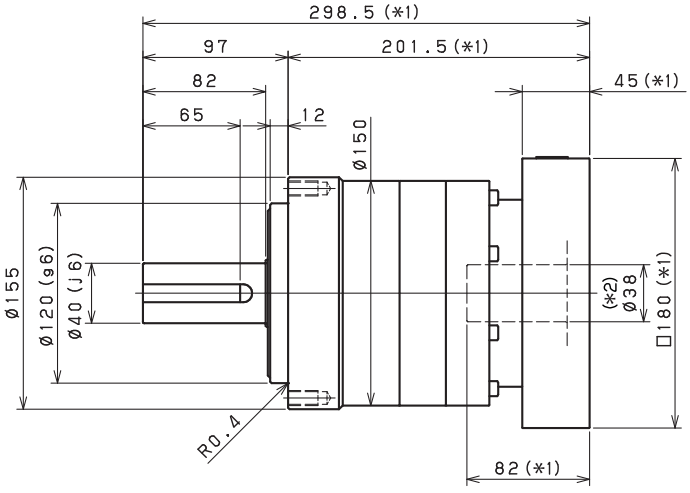

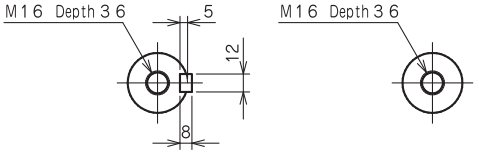

Shaft with key　　Smooth shaft

*1) Length will vary depending on motor

*2) Bushing will be inserted to adapt to motor shaft

VRL-155 – 1-Stage Adapter Dimensions

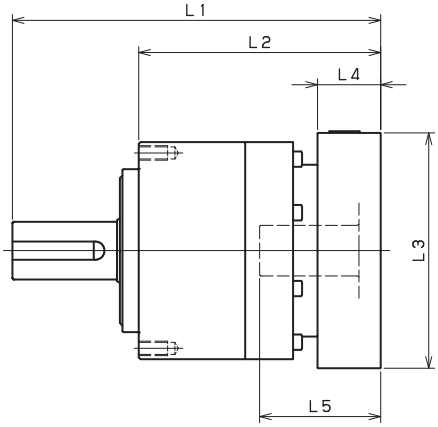

Model number	**: Adapter code	1-Stage					
		L1	L*	L2	L3	L4	L5
VRL-155-□-□-19** (Input shaft bore ≦ φ19)	DA•DB•DC	--	--	--	--	--	--
	EB•ED	--	--	--	--	--	--
	FA	--	--	--	--	--	--
	FB	--	--	--	--	--	--
	GB•GD•GJ	--	--	--	--	--	--
	HA	--	--	--	--	--	--
	HB	--	--	--	--	--	--
	JA	--	--	--	--	--	--
VRL-155-□-□-28** (Input shaft bore ≦ φ28)	FA•FB•FC	249	214	152	□100	35	67
	GA•GB•GC•GD•GE•GF•GG•GH	249	214	152	□115	35	67
	HA•HC•HD	249	214	152	□130	35	67
	HB	259	214	162	□130	45	77
	HF	244	214	147	□130	30	62
	JA•JB•JC•JF	249	214	152	□150	35	67
	KA•KB•KE	249	214	152	□180	35	67
	LA	249	214	152	□200	35	67
	LB	259	214	162	□200	45	77
	MA	249	214	152	□220	35	67
	MB	259	214	162	□220	45	77
VRL-155-□-□-38** (Input shaft bore ≦ φ38)	HA	264	219	167	□130	45	82
	HB•HE	259	219	162	□130	40	77
	JA	264	219	167	□150	45	82
	KA•KB•KC	264	219	167	□180	45	82
	KD	299	219	202	□180	80	117
	KE	279	219	182	□180	60	97
	LB	274	219	177	□200	55	92
	MA•MB	264	219	167	□220	45	82
	MC	279	219	182	□220	60	97
	MD	274	219	177	□220	55	92
VRL-155-□-□-48** (Input shaft bore ≦ φ48)	KA	305	230	208	□180	75	118
	KB•KC	285	230	188	□180	55	98
	LA	285	230	188	□200	55	98
	MA	285	230	188	□220	55	98
	MB	305	230	208	□220	75	118

*1) Single reduction : 1/3~ 1/10 *2) Bushing will be inserted to adapt to motor shaft

For an explanation on the Adapter Flange Code, please turn to page 422.

A more comprehensive adapter flange offering can be found using the NIDEC-SHIMPO Online Selector Tool. The variety is constantly expanding and being updated on the Selector Tool. If you have any questions or need any support, contact NIDEC-SHIMPO.

VRL-155 – 2-Stage Adapter Dimensions

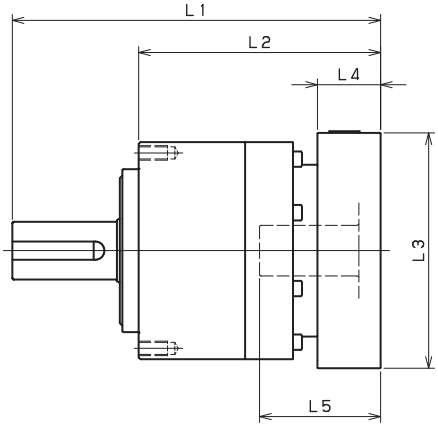

Model number	**: Adapter code	2-Stage					
		L1	L*	L2	L3	L4	L5
VRL-155-□-□-19** (Input shaft bore ≦ φ19)	DA•DB•DC	266.5	241.5	169.5	□80	25	50
	EB•ED	266.5	241.5	169.5	□90	25	50
	FA	266.5	241.5	169.5	□100	25	50
	FB	276.5	241.5	179.5	□100	35	60
	GB•GD•GJ	266.5	241.5	169.5	□115	25	50
	HA	266.5	241.5	169.5	□130	25	50
	HB	281.5	241.5	184.5	□130	40	65
	JA	276.5	241.5	179.5	□150	35	60
VRL-155-□-□-28** (Input shaft bore ≦ φ28)	FA•FB•FC	283.5	248.5	186.5	□100	35	67
	GA•GB•GC•GD•GE•GF•GG•GH	283.5	248.5	186.5	□115	35	67
	HA•HC•HD	283.5	248.5	186.5	□130	35	67
	HB	293.5	248.5	196.5	□130	45	77
	HF	278.5	248.5	181.5	□130	30	62
	JA•JB•JC•JF	283.5	248.5	186.5	□150	35	67
	KA•KB•KE	283.5	248.5	186.5	□180	35	67
	LA	283.5	248.5	186.5	□200	35	67
	LB	293.5	248.5	196.5	□200	45	77
	MA	283.5	248.5	186.5	□220	35	67
	MB	293.5	248.5	196.5	□220	45	77
VRL-155-□-□-38** (Input shaft bore ≦ φ38)	HA	298.5	253.5	201.5	□130	45	82
	HB•HE	293.5	253.5	196.5	□130	40	77
	JA	298.5	253.5	201.5	□150	45	82
	KA•KB•KC	298.5	253.5	201.5	□180	45	82
	KD	333.5	253.5	236.5	□180	80	117
	KE	313.5	253.5	216.5	□180	60	97
	LB	308.5	253.5	211.5	□200	55	92
	MA•MB	298.5	253.5	201.5	□220	45	82
	MC	313.5	253.5	216.5	□220	60	97
	MD	308.5	253.5	211.5	□220	55	92
VRL-155-□-□-48** (Input shaft bore ≦ φ48)	KA	339.5	264.5	242.5	□180	75	118
	KB•KC	319.5	264.5	222.5	□180	55	98
	LA	319.5	264.5	222.5	□200	55	98
	MA	319.5	264.5	222.5	□220	55	98
	MB	339.5	264.5	242.5	□220	75	118

*1) Double reduction : 1/15~ 1/100 *2) Bushing will be inserted to adapt to motor shaft

For an explanation on the Adapter Flange Code, please turn to page 422.

A more comprehensive adapter flange offering can be found using the NIDEC-SHIMPO Online Selector Tool. The variety is constantly expanding and being updated on the Selector Tool. If you have any questions or need any support, contact NIDEC-SHIMPO.

VRL-205 – 1-Stage Specifications

Frame Size	**205**									
Stage	**1-Stage**									
Ratio	Unit	Note	3	4	5	6	7	8	9	10
Nominal Output Torque	[Nm]	*1	500	750	750	750	750	750	500	500
Maximum Acceleration Torque	[Nm]	*2	970	1400	1400	1400	1400	1400	970	970
Emergency Stop Torque	[Nm]	*3	2200	2750	2750	2750	2750	2750	2200	2200
Nominal Input Speed	[rpm]	*4	1500							
Maximum Input Speed	[rpm]	*5	3000							
No Load Running Torque	[Nm]	*6	2.68							
Permitted Radial Load	[N]	*7	5600	6200	6700	7100	7400	7800	8100	8400
Permitted Axial Load	[N]	*8	4300	4900	5400	5800	6300	6600	7000	7300
Maximum Radial Load	[N]	*9	15000							
Maximum Axial Load	[N]	*10	14000							
Moment of Inertia (≤Ø 28)	[kgcm2]	--	--	--	--	--	--	--	--	--
Moment of Inertia (≤ Ø 38)	[kgcm2]	--	44.000	28.000	22.000	18.000	16.000	15.000	14.000	14.000
Moment of Inertia (≤ Ø 48)	[kgcm2]	--	66.000	50.000	44.000	41.000	38.000	37.000	36.000	36.000
Moment of Inertia (≤ Ø 65)	[kgcm2]	--	130.000	110.000	100.000	100.000	99.000	97.000	97.000	96.000
Efficiency	[%]	*11	95							
Torsional Rigidity	[Nm/arc-min]	*12	175							
Maximum Torsional Backlash	[arc-min]	--	≤ 5							
Noise Level	[dB]	*13	67							
Protection Class	--	*14	IP54 (IP65)							
Ambient Temperature	[°C]	--	0-40							
Permitted Housing Temperature	[°C]	--	90							
Weight	[kg]	*15	39							

VRL-205 – 2-Stage Specifications

Frame Size	**205**									
Stage	**2-Stage**									
Ratio	Unit	Note	15	16	20	25	28	30	35	40
Nominal Output Torque	[Nm]	*1	500	750	750	750	750	500	750	750
Maximum Acceleration Torque	[Nm]	*2	970	1400	1400	1400	1400	970	1400	1400
Emergency Stop Torque	[Nm]	*3	2200	2750	2750	2750	2750	2200	2750	2750
Nominal Input Speed	[rpm]	*4	1500							
Maximum Input Speed	[rpm]	*5	3000							
No Load Running Torque	[Nm]	*6	1.39							
Permitted Radial Load	[N]	*7	9600	9800	11000	11000	12000	12000	13000	13000
Permitted Axial Load	[N]	*8	8700	8900	9900	11000	11000	12000	13000	13000
Maximum Radial Load	[N]	*9	15000							
Maximum Axial Load	[N]	*10	14000							
Moment of Inertia (≤Ø 28)	[kgcm2]	--	4.700	5.400	4.400	4.200	4.900	3.200	4.100	3.200
Moment of Inertia (≤ Ø 38)	[kgcm2]	--	12.000	13.000	12.000	12.000	13.000	11.000	12.000	11.000
Moment of Inertia (≤ Ø 48)	[kgcm2]	--	34.000	35.000	34.000	34.000	35.000	33.000	34.000	33.000
Moment of Inertia (≤ Ø 65)	[kgcm2]	--	--	--	--	--	--	--	--	--
Efficiency	[%]	*11	90							
Torsional Rigidity	[Nm/arc-min]	*12	175							
Maximum Torsional Backlash	[arc-min]	--	≤ 5							
Noise Level	[dB]	*13	67							
Protection Class	--	*14	IP54 (IP65)							
Ambient Temperature	[°C]	--	0-40							
Permitted Housing Temperature	[°C]	--	90							
Weight	[kg]	*15	40							

VRL-205 – 2-Stage Specifications

Frame Size	**205**								
Stage	**2-Stage**								
Ratio	Unit	Note	45	50	60	70	80	90	100
Nominal Output Torque	[Nm]	*1	500	750	750	750	750	500	500
Maximum Acceleration Torque	[Nm]	*2	970	1400	1400	1400	1400	970	970
Emergency Stop Torque	[Nm]	*3	2200	2750	2750	2750	2750	2200	2200
Nominal Input Speed	[rpm]	*4	1500						
Maximum Input Speed	[rpm]	*5	3000						
No Load Running Torque	[Nm]	*6	1.39						
Permitted Radial Load	[N]	*7	14000	14000	15000	15000	15000	15000	15000
Permitted Axial Load	[N]	*8	14000	14000	14000	14000	14000	14000	14000
Maximum Radial Load	[N]	*9	15000						
Maximum Axial Load	[N]	*10	14000						
Moment of Inertia (≤Ø 28)	[kgcm2]	--	4.000	3.100	3.100	3.100	3.100	3.100	3.100
Moment of Inertia (≤ Ø 38)	[kgcm2]	--	12.000	11.000	11.000	11.000	11.000	11.000	11.000
Moment of Inertia (≤ Ø 48)	[kgcm2]	--	34.000	33.000	33.000	33.000	33.000	33.000	33.000
Moment of Inertia (≤ Ø 65)	[kgcm2]	--	--	--	--	--	--	--	--
Efficiency	[%]	*11	90						
Torsional Rigidity	[Nm/arc-min]	*12	175						
Maximum Torsional Backlash	[arc-min]	--	≤ 5						
Noise Level	[dB]	*13	67						
Protection Class	--	*14	IP54 (IP65)						
Ambient Temperature	[°C]	--	0-40						
Permitted Housing Temperature	[°C]	--	90						
Weight	[kg]	*15	40						

*1) At nominal input speed, service life is 20,000 hours
*2) The maximum torque when starting or stopping operation
*3) The maximum torque allowed under a stress situation (Permitted 1,000 times during service life)
*4) The average input speed
*5) The maximum intermittent input speed
*6) This is the torque at no load applied on the input shaft. The input speed is 1,500 rpm for VRL205
*7) At this load and nominal input speed, service life will be 20,000 hours. (The radial load applied to the output side bearing)
*8) At this load and nominal input speed, service life will be 20,000 hours. (The axial load applied to the output shaft center)
*9) The maximum radial load that the reducer can accept
*10) The maximum axial load that the reducer can accept
*11) The efficiency at the nominal torque rating
*12) This does not include the lost motion
*13) Contact NIDEC-SHIMPO for the testing conditions and environment
*14) IP65 (wash-down) is available as an option. Contact NIDEC-SHIMPO for more details and our food grade options
*15) The weight may vary slightly between models

VRL-205 – 1-Stage Dimensions

Input shaft bore ≦ φ38

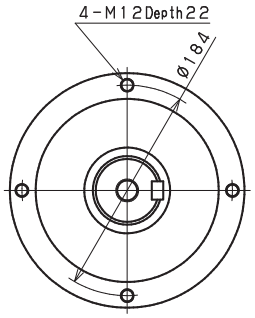

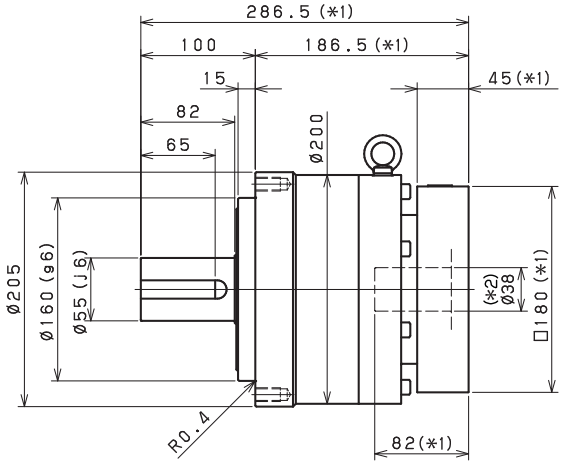

Input shaft bore ≦ φ48

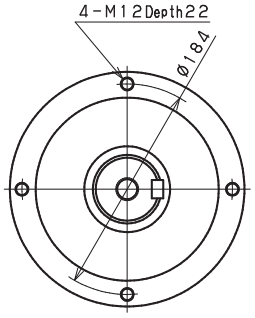

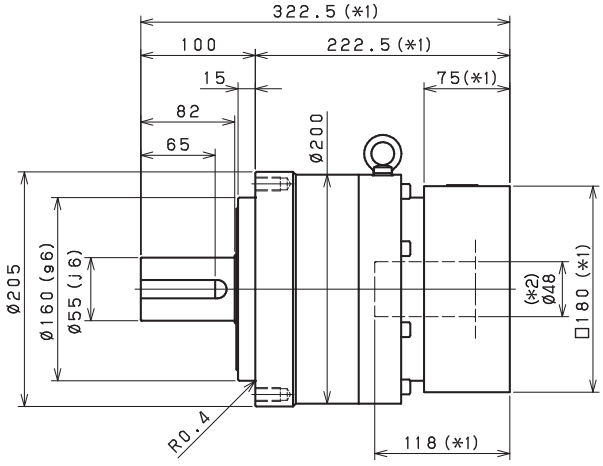

Input shaft bore ≦ φ65

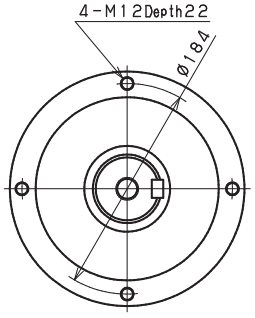

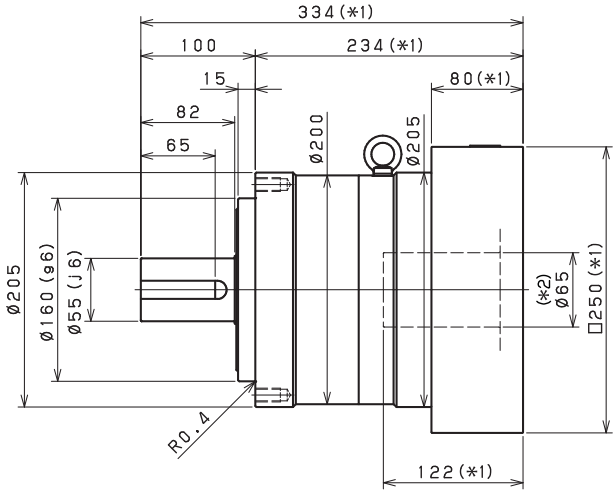

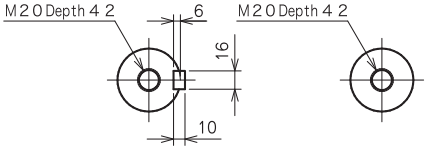

Shaft with key　　Smooth shaft

*1) Length will vary depending on motor

*2) Bushing will be inserted to adapt to motor shaft

VRL-205 – 2-Stage Dimensions

Input shaft bore ≦φ28

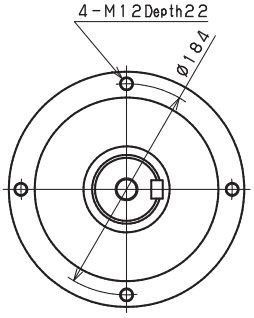

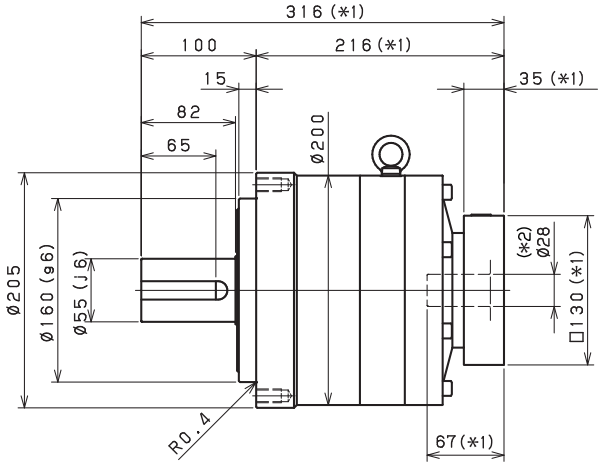

Input shaft bore ≦φ38

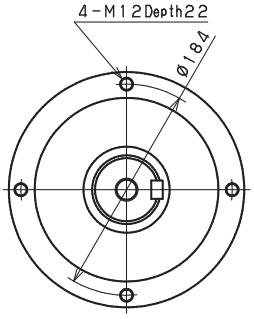

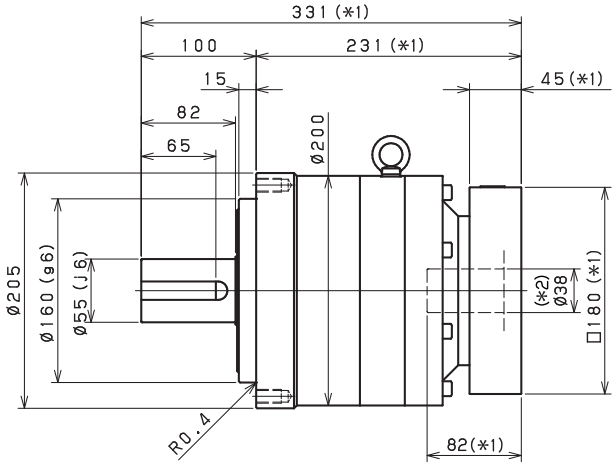

Input shaft bore ≦φ48

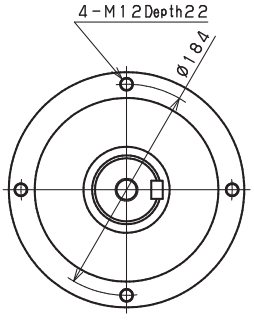

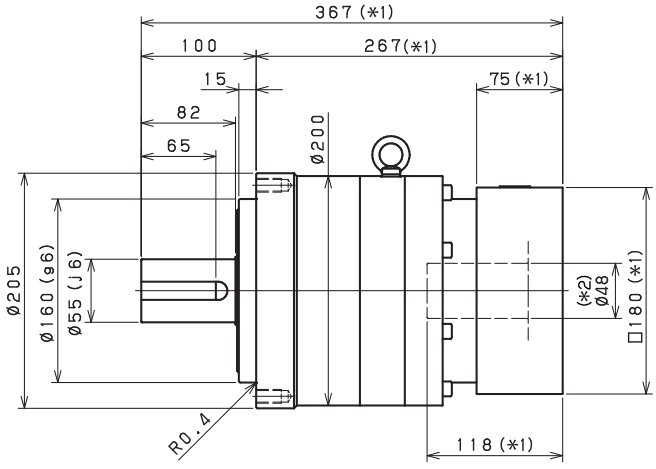

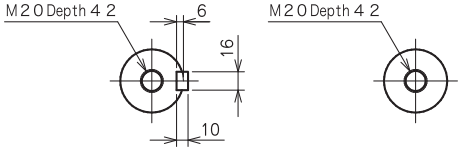

Shaft with key　　Smooth shaft

*1) Length will vary depending on motor

*2) Bushing will be inserted to adapt to motor shaft

VRL-205 – 1-Stage Adapter Dimensions

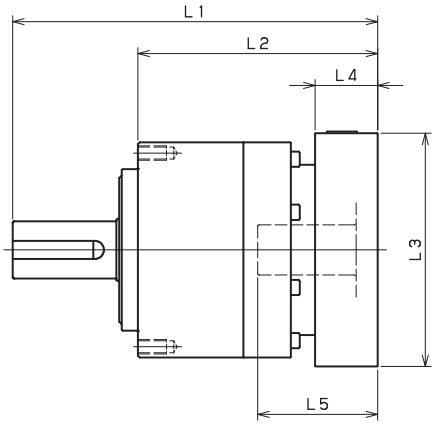

Model number	**: Adapter code	1-Stage					
		L1	L*	L2	L3	L4	L5
VRL-205-□-□-28** (Input shaft bore ≦ φ28)	FA•FB•FC	--	--	--	--	--	--
	GA•GB•GC•GD•GE•GF•GG•GH	--	--	--	--	--	--
	HA•HC•HD	--	--	--	--	--	--
	HB	--	--	--	--	--	--
	HF	--	--	--	--	--	--
	JA•JB•JC•JF	--	--	--	--	--	--
	KA•KB•KE	--	--	--	--	--	--
	LA	--	--	--	--	--	--
	LB	--	--	--	--	--	--
	MA	--	--	--	--	--	--
	MB	--	--	--	--	--	--
VRL-205-□-□-38** (Input shaft bore ≦ φ38)	HA	286.5	241.5	186.5	□130	45	82
	HB•HE	281.5	241.5	181.5	□130	40	77
	JA	286.5	241.5	186.5	□150	45	82
	KA•KB•KC	286.5	241.5	186.5	□180	45	82
	KD	321.5	241.5	221.5	□180	80	117
	KE	301.5	241.5	201.5	□180	60	97
	LB	296.5	241.5	196.5	□200	55	92
	MA•MB	286.5	241.5	186.5	□220	45	82
	MC	301.5	241.5	201.5	□220	60	97
	MD	296.5	241.5	196.5	□220	55	92
	NA	286.5	241.5	186.5	□250	45	82
VRL-205-□-□-48** (Input shaft bore ≦ φ48)	KA	322.5	247.5	222.5	□180	75	118
	KB•KC	302.5	247.5	202.5	□180	55	98
	LA	302.5	247.5	202.5	□200	55	98
	MA	302.5	247.5	202.5	□220	55	98
	MB	322.5	247.5	222.5	□220	75	118
	NA	322.5	247.5	222.5	□250	75	118
	PA	322.5	247.5	222.5	□280	75	118
VRL-205-□-□-65** (Input shaft bore ≦ φ65)	MA•MB•MC•MD	334	254	234	□220	80	122
	NA•NC	334	254	234	□250	80	122
	NB•ND	364	254	264	□250	110	152
	PA	354	254	254	□280	100	142
	PB	364	254	264	□280	110	152

*1) Single reduction : 1/3~ 1/10 *2) Bushing will be inserted to adapt to motor shaft

For an explanation on the Adapter Flange Code, please turn to page 422.

A more comprehensive adapter flange offering can be found using the NIDEC-SHIMPO Online Selector Tool. The variety is constantly expanding and being updated on the Selector Tool. If you have any questions or need any support, contact NIDEC-SHIMPO.

VRL-205 – 2-Stage Adapter Dimensions

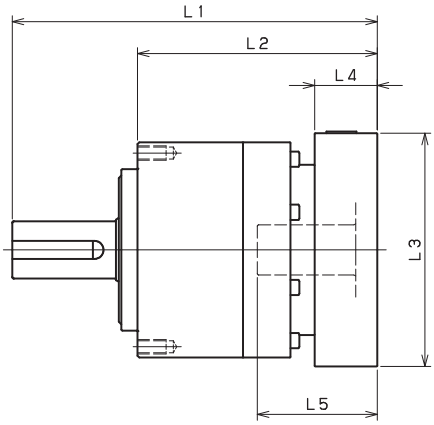

Model number	**: Adapter code	2-Stage					
		L1	L*	L2	L3	L4	L5
VRL-205-□-□-28** (Input shaft bore ≦ φ28)	FA•FB•FC	316	281	216	□100	35	67
	GA•GB•GC•GD•GE•GF•GG•GH	316	281	216	□115	35	67
	HA•HC•HD	316	281	216	□130	35	67
	HB	326	281	226	□130	45	77
	HF	311	281	211	□130	30	62
	JA•JB•JC•JF	316	281	216	□150	35	67
	KA•KB•KE	316	281	216	□180	35	67
	LA	316	281	216	□200	35	67
	LB	326	281	226	□200	45	77
	MA	316	281	216	□220	35	67
	MB	326	281	226	□220	45	77
VRL-205-□-□-38** (Input shaft bore ≦ φ38)	HA	331	286	231	□130	45	82
	HB•HE	326	286	226	□130	40	77
	JA	331	286	231	□150	45	82
	KA•KB•KC	331	286	231	□180	45	82
	KD	366	286	266	□180	80	117
	KE	346	286	246	□180	60	97
	LB	341	286	241	□200	55	92
	MA•MB	331	286	231	□220	45	82
	MC	346	286	246	□220	60	97
	MD	341	286	241	□220	55	92
	NA	331	286	231	□250	45	82
VRL-205-□-□-48** (Input shaft bore ≦ φ48)	KA	367	292	267	□180	75	118
	KB•KC	347	292	247	□180	55	98
	LA	347	292	247	□200	55	98
	MA	347	292	247	□220	55	98
	MB	367	292	267	□220	75	118
	NA	367	292	267	□250	75	118
	PA	367	292	267	□280	75	118
VRL-205-□-□-65** (Input shaft bore ≦ φ65)	MA•MB•MC•MD	--	--	--	--	--	--
	NA•NC	--	--	--	--	--	--
	NB•ND	--	--	--	--	--	--
	PA	--	--	--	--	--	--
	PB	--	--	--	--	--	--

*1) Double reduction : 1/15~ 1/100 *2) Bushing will be inserted to adapt to motor shaft

For an explanation on the Adapter Flange Code, please turn to page 422.

A more comprehensive adapter flange offering can be found using the NIDEC-SHIMPO Online Selector Tool. The variety is constantly expanding and being updated on the Selector Tool. If you have any questions or need any support, contact NIDEC-SHIMPO.

VRL-235 – 1-Stage Specifications

Frame Size	**235**									
Stage	**1-Stage**									
Ratio	Unit	Note	3	4	5	6	7	8	9	10
Nominal Output Torque	[Nm]	*1	1000	1500	1500	1500	1500	1500	1000	1000
Maximum Acceleration Torque	[Nm]	*2	1600	2300	2300	2300	2300	2200	1900	1600
Emergency Stop Torque	[Nm]	*3	4000	5000	5000	5000	5000	5000	4000	4000
Nominal Input Speed	[rpm]	*4	1000							
Maximum Input Speed	[rpm]	*5	2000							
No Load Running Torque	[Nm]	*6	2.92							
Permitted Radial Load	[N]	*7	5800	6400	6900	7300	7700	8000	8400	8700
Permitted Axial Load	[N]	*8	6400	7200	7900	8600	9200	9700	10000	11000
Maximum Radial Load	[N]	*9	15000							
Maximum Axial Load	[N]	*10	14000							
Moment of Inertia (≤ Ø 38)	[kgcm2]	--	--	--	--	--	--	--	--	--
Moment of Inertia (≤ Ø 48)	[kgcm2]	--	90.000	62.000	52.000	47.000	42.000	40.000	39.000	38.000
Moment of Inertia (≤ Ø 65)	[kgcm2]	--	150.000	120.000	110.000	110.000	100.000	100.000	99.000	98.000
Efficiency	[%]	*11	97							
Torsional Rigidity	[Nm/arc-min]	*12	400							
Maximum Torsional Backlash	[arc-min]	--	≤ 5							
Noise Level	[dB]	*13	61							
Protection Class	--	*14	IP54 (IP65)							
Ambient Temperature	[°C]	--	0-40							
Permitted Housing Temperature	[°C]	--	90							
Weight	[kg]	*15	55							

VRL-235 – 2-Stage Specifications

Frame Size	**235**									
Stage	**2-Stage**									
Ratio	Unit	Note	15	16	20	25	28	30	35	40
Nominal Output Torque	[Nm]	*1	1000	1500	1500	1500	1500	1000	1500	1500
Maximum Acceleration Torque	[Nm]	*2	1600	2300	2300	2300	2300	1600	2300	2300
Emergency Stop Torque	[Nm]	*3	4000	5000	5000	5000	5000	4000	5000	5000
Nominal Input Speed	[rpm]	*4	1000							
Maximum Input Speed	[rpm]	*5	2000							
No Load Running Torque	[Nm]	*6	1.14							
Permitted Radial Load	[N]	*7	9900	10000	11000	12000	12000	13000	13000	14000
Permitted Axial Load	[N]	*8	13000	13000	14000	14000	14000	14000	14000	14000
Maximum Radial Load	[N]	*9	15000							
Maximum Axial Load	[N]	*10	14000							
Moment of Inertia (≤ Ø 38)	[kgcm2]	--	14.000	16.000	14.000	14.000	15.000	12.000	13.000	12.000
Moment of Inertia (≤ Ø 48)	[kgcm2]	--	36.000	37.000	35.000	35.000	36.000	34.000	35.000	33.000
Moment of Inertia (≤ Ø 65)	[kgcm2]	--	--	--	--	--	--	--	--	--
Efficiency	[%]	*11	92							
Torsional Rigidity	[Nm/arc-min]	*12	400							
Maximum Torsional Backlash	[arc-min]	--	≤ 5							
Noise Level	[dB]	*13	61							
Protection Class	--	*14	IP54 (IP65)							
Ambient Temperature	[°C]	--	0-40							
Permitted Housing Temperature	[°C]	--	90							
Weight	[kg]	*15	57							

VRL-235 – 2-Stage Specifications

Frame Size	**235**								
Stage	**2-Stage**								
Ratio	Unit	Note	45	50	60	70	80	90	100
Nominal Output Torque	[Nm]	*1	1000	1500	1500	1500	1500	1000	1000
Maximum Acceleration Torque	[Nm]	*2	1300	2300	2300	2300	1800	1300	1200
Emergency Stop Torque	[Nm]	*3	4000	5000	5000	5000	5000	4000	4000
Nominal Input Speed	[rpm]	*4	1000						
Maximum Input Speed	[rpm]	*5	2000						
No Load Running Torque	[Nm]	*6	1.14						
Permitted Radial Load	[N]	*7	14000	15000	15000	15000	15000	15000	15000
Permitted Axial Load	[N]	*8	14000	14000	14000	14000	14000	14000	14000
Maximum Radial Load	[N]	*9	15000						
Maximum Axial Load	[N]	*10	14000						
Moment of Inertia (≤ Ø 38)	[kgcm2]	--	13.000	12.000	12.000	12.000	12.000	12.000	12.000
Moment of Inertia (≤ Ø 48)	[kgcm2]	--	35.000	33.000	33.000	33.000	33.000	33.000	33.000
Moment of Inertia (≤ Ø 65)	[kgcm2]	--	--	--	--	--	--	--	--
Efficiency	[%]	*11	92						
Torsional Rigidity	[Nm/arc-min]	*12	400						
Maximum Torsional Backlash	[arc-min]	--	≤ 5						
Noise Level	[dB]	*13	61						
Protection Class	--	*14	IP54 (IP65)						
Ambient Temperature	[°C]	--	0-40						
Permitted Housing Temperature	[°C]	--	90						
Weight	[kg]	*15	57						

*1) At nominal input speed, service life is 20,000 hours
*2) The maximum torque when starting or stopping operation
*3) The maximum torque allowed under a stress situation (Permitted 1,000 times during service life)
*4) The average input speed
*5) The maximum intermittent input speed
*6) This is the torque at no load applied on the input shaft. The input speed is 1,000 rpm for VRL235
*7) At this load and nominal input speed, service life will be 20,000 hours. (The radial load applied to the output side bearing)
*8) At this load and nominal input speed, service life will be 20,000 hours. (The axial load applied to the output shaft center)
*9) The maximum radial load that the reducer can accept
*10) The maximum axial load that the reducer can accept
*11) The efficiency at the nominal torque rating
*12) This does not include the lost motion
*13) Contact NIDEC-SHIMPO for the testing conditions and environment
*14) IP65 (wash-down) is available as an option. Contact NIDEC-SHIMPO for more details and our food grade options
*15) The weight may vary slightly between models

VRL-235 – 1-Stage Dimensions

Input shaft bore ≦φ48

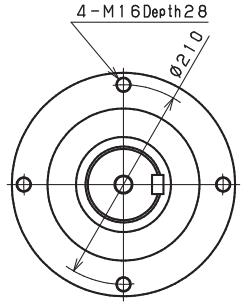

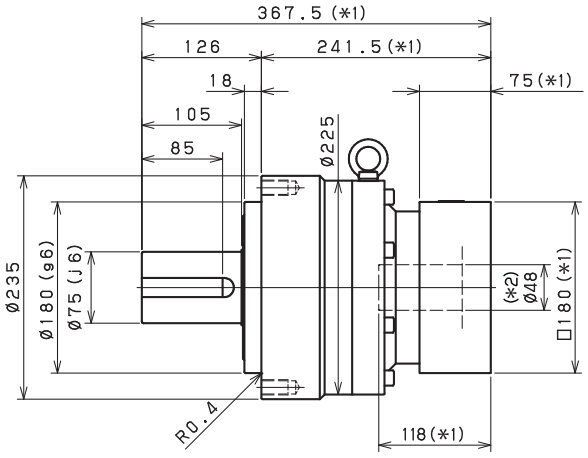

Input shaft bore ≦φ65

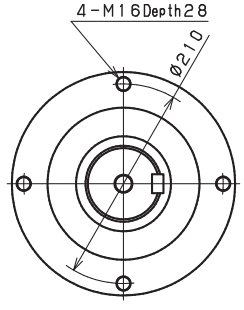

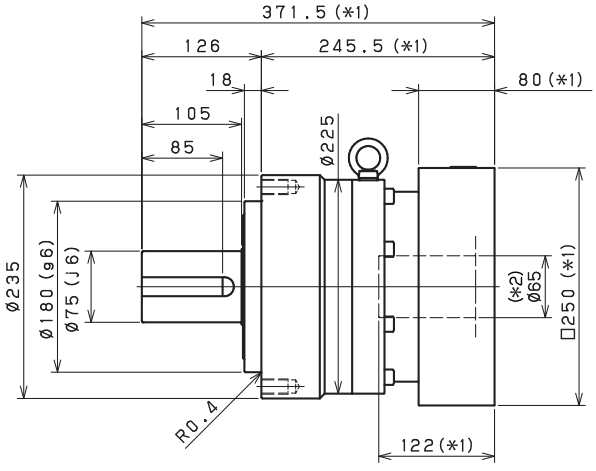

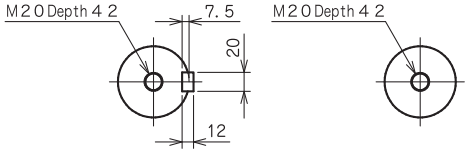

Shaft with key

Smooth shaft

*1) Length will vary depending on motor

*2) Bushing will be inserted to adapt to motor shaft

VRL-235 – 2-Stage Dimensions

Input shaft bore ≦φ38

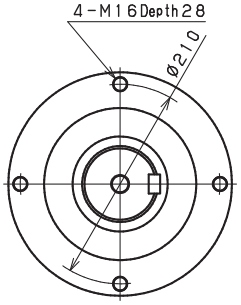

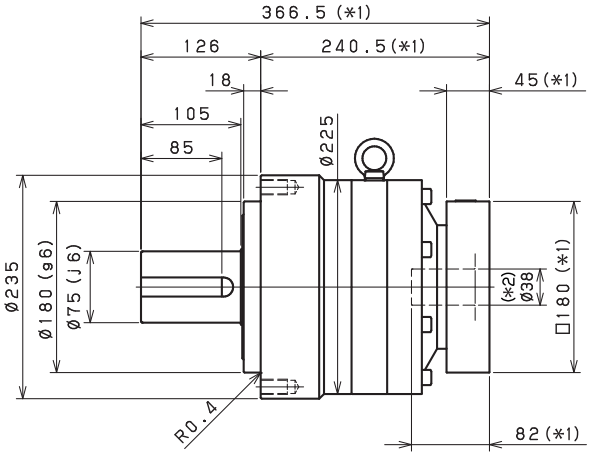

Input shaft bore ≦φ48

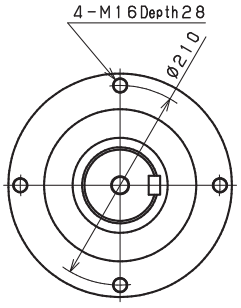

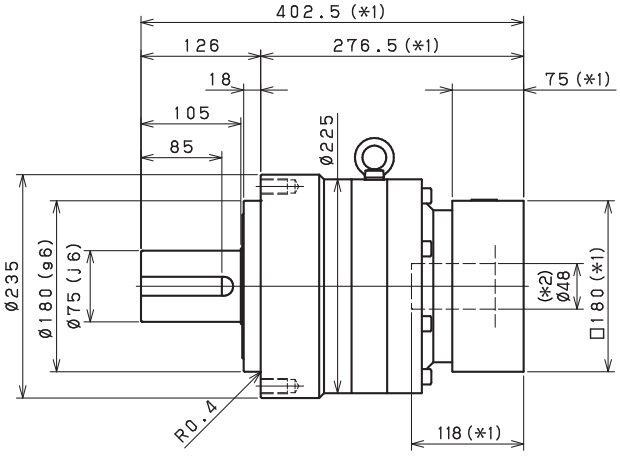

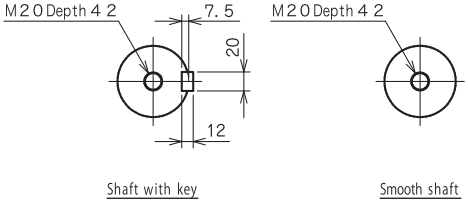

*1) Length will vary depending on motor

*2) Bushing will be inserted to adapt to motor shaft

VRL-235 – 1-Stage Adapter Dimensions

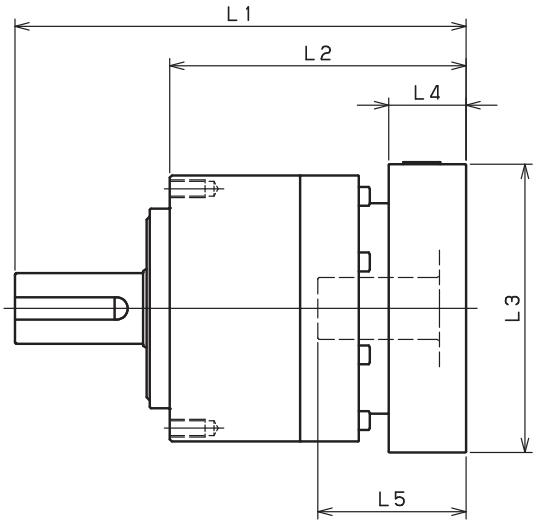

Model number	**: Adapter code	1-Stage					
		L1	L*	L2	L3	L4	L5
VRL-235-□-□-38** (Input shaft bore ≦ φ38)	HA	--	--	--	--	--	--
	HB•HE	--	--	--	--	--	--
	JA	--	--	--	--	--	--
	KA•KB•KC	--	--	--	--	--	--
	KD	--	--	--	--	--	--
	KE	--	--	--	--	--	--
	LA	--	--	--	--	--	--
	LB	--	--	--	--	--	--
	MA•MB	--	--	--	--	--	--
	MC	--	--	--	--	--	--
	MD	--	--	--	--	--	--
	NA	--	--	--	--	--	--
VRL-235-□-□-48** (Input shaft bore ≦ φ48)	KA	367.5	292.5	241.5	□180	75	118
	KB•KC	347.5	292.5	221.5	□180	55	98
	LA	347.5	292.5	221.5	□200	55	98
	MA	347.5	292.5	221.5	□220	55	98
	MB	367.5	292.5	241.5	□220	75	118
	NA	367.5	292.5	241.5	□250	75	118
	PA	367.5	292.5	241.5	□280	75	118
VRL-235-□-□-65** (Input shaft bore ≦ φ65)	MA•MB•MC•MD	371.5	291.5	245.5	□220	80	122
	NA•NC	371.5	291.5	245.5	□250	80	122
	NB•ND	401.5	291.5	275.5	□250	110	152
	PA	391.5	291.5	265.5	□280	100	142
	PB	401.5	291.5	275.5	□280	110	152
	QA•QB	391.5	291.5	265.5	□320	100	142

*1) Single reduction : 1/3~ 1/10

*2) Bushing will be inserted to adapt to motor shaft

For an explanation on the Adapter Flange Code, please turn to page 422.

A more comprehensive adapter flange offering can be found using the NIDEC-SHIMPO Online Selector Tool. The variety is constantly expanding and being updated on the Selector Tool. If you have any questions or need any support, contact NIDEC-SHIMPO.

VRL-235 – 2-Stage Adapter Dimensions

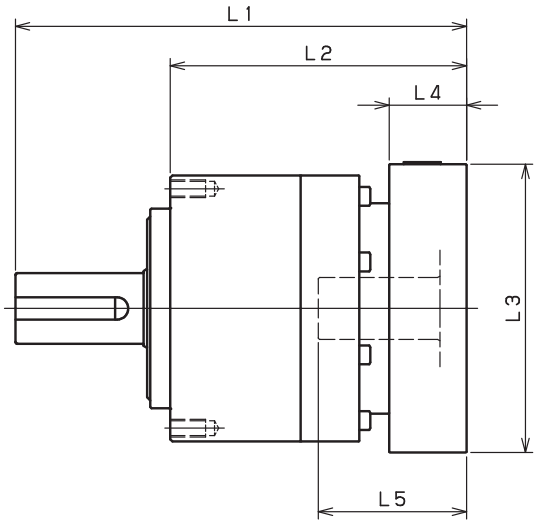

Model number	**: Adapter code	2-Stage					
		L1	L*	L2	L3	L4	L5
VRL-235-□-□-38** (Input shaft bore ≦ φ38)	HA	366.5	321.5	240.5	□130	45	82
	HB•HE	361.5	321.5	235.5	□130	40	77
	JA	366.5	321.5	240.5	□150	45	82
	KA•KB•KC	366.5	321.5	240.5	□180	45	82
	KD	401.5	321.5	275.5	□180	80	117
	KE	381.5	321.5	255.5	□180	60	97
	LA	366.5	321.5	240.5	□200	45	82
	LB	376.5	321.5	250.5	□200	55	92
	MA•MB	366.5	321.5	240.5	□220	45	82
	MC	381.5	321.5	255.5	□220	60	97
	MD	376.5	321.5	250.5	□220	55	92
	NA	366.5	321.5	240.5	□250	45	82
VRL-235-□-□-48** (Input shaft bore ≦ φ48)	KA	402.5	327.5	276.5	□180	75	118
	KB•KC	382.5	327.5	256.5	□180	55	98
	LA	382.5	327.5	256.5	□200	55	98
	MA	382.5	327.5	256.5	□220	55	98
	MB	402.5	327.5	276.5	□220	75	118
	NA	402.5	327.5	276.5	□250	75	118
	PA	402.5	327.5	276.5	□280	75	118
VRL-235-□-□-65** (Input shaft bore ≦ φ65)	MA•MB•MC•MD	--	--	--	--	--	--
	NA•NC	--	--	--	--	--	--
	NB•ND	--	--	--	--	--	--
	PA	--	--	--	--	--	--
	PB	--	--	--	--	--	--
	QA•QB	--	--	--	--	--	--

*1) Double reduction : 1/15~ 1/100

*2) Bushing will be inserted to adapt to motor shaft

For an explanation on the Adapter Flange Code, please turn to page 422.

A more comprehensive adapter flange offering can be found using the NIDEC-SHIMPO Online Selector Tool. The variety is constantly expanding and being updated on the Selector Tool. If you have any questions or need any support, contact NIDEC-SHIMPO.

VRB-SERIES

A valuable alternative for OEMs that need a high-performance gearbox, and prefers a flexible mounting design to make it easier to assemble the gearhead onto their machinery. The positional accuracy and torque handling capabilities are an ideal fit for packaging machinery, medical equipment, and custom assembly cell automation.

The VRB Series planetary gearbox and its standard mounting flange are a dimensional replacement for a few common competitive models. The maximum output torque for the series peaks at 2,300 Nm. The VRB provides a backlash rating of <3 arc-minutes as its standard, which means this series provides solid performance at an exceptional value.

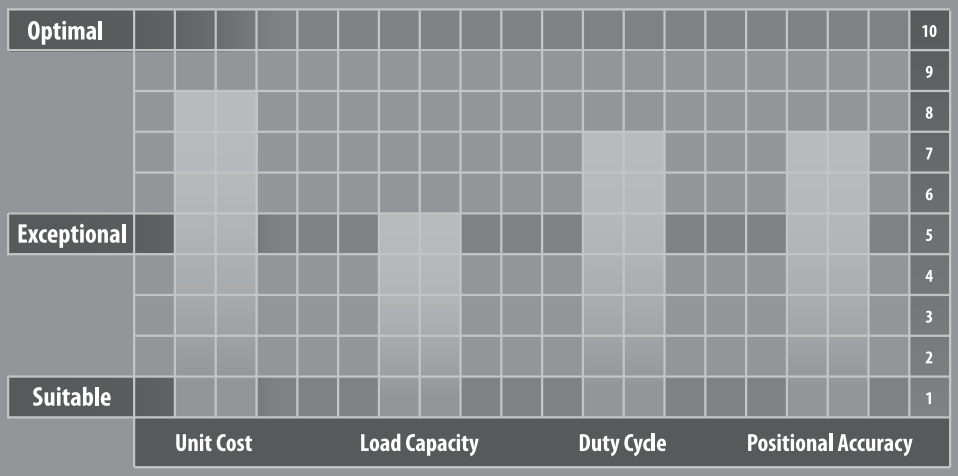

VRB-SERIES

- Industry standard mounting dimensions
- Large variety of frame sizes and ratios
- Thru-bolt mounting style
- Best-in-class backlash (≤3 arc-min)
- Ships in 48 hours in standard frame sizes
- Assembled in the USA

VRB-Series – Features

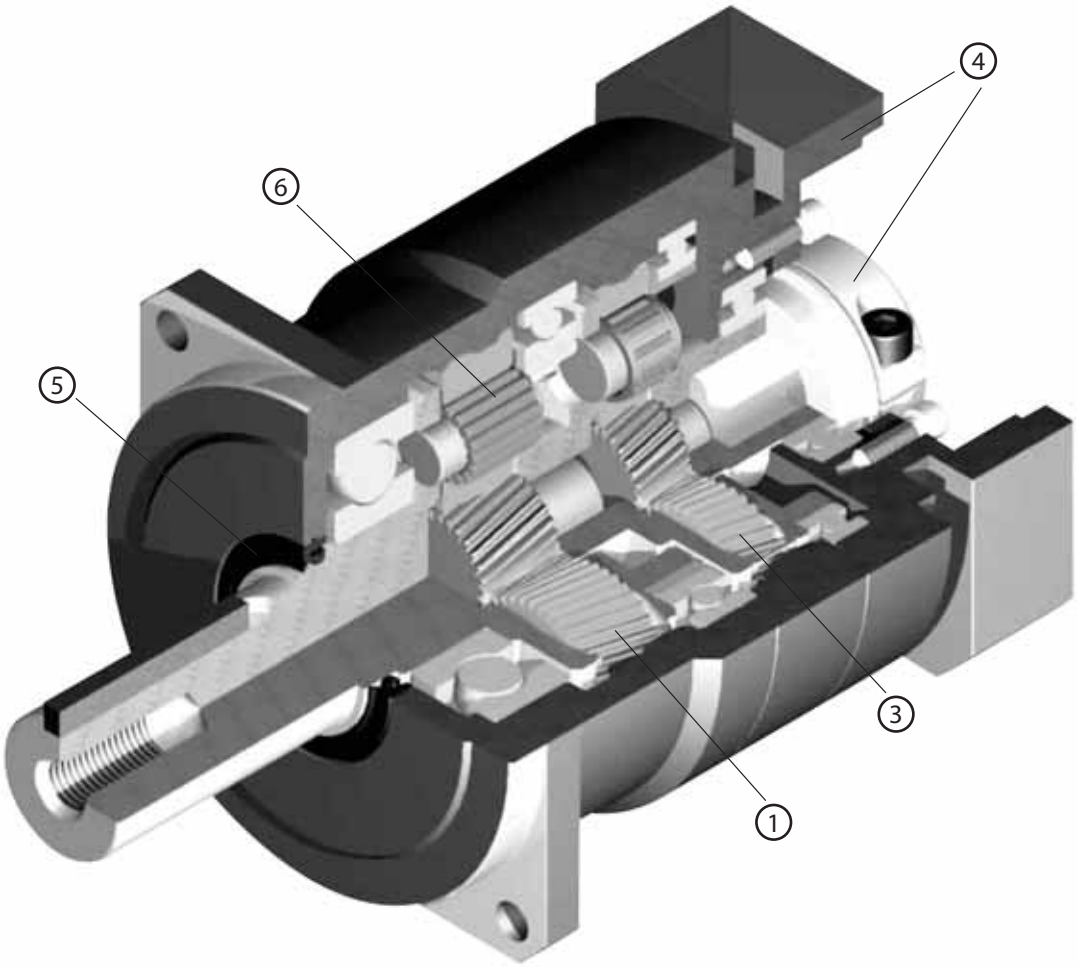

1. Quiet operation: Helical cut gears contribute to reduced vibration and noise
2. High precision: Standard backlash is 3 arc-min, ideal for higher levels of positional accuracy
3. High rigidity & torque: Rigidity and torque capacity are achieved by using uncaged needle roller bearings
4. Adapter-bushing connection: Enables a simple, effective attachment to most servo motors
5. No leakage through the seal: High viscosity, anti-separation grease does not liquefy and does not migrate away from the gears
6. Maintenance-free: No need to replace the grease for the life of the unit. The reducer can be positioned in any orientation

VRB-Series – Model Code

VR	B	–	090	–	7	–	K	3	–	19HB16

- 19HB16: * Adapter flange code
- 3: Backlash 3・・・ 3arc-min
- K: Output style K・・・ Shaft with key; S・・・ Smooth shaft
- 7: Ratio
  - Single: 3, 4, 5, 6, 7, 8, 9, 10
  - Double: 15, 16, 20, 25, 28, 30, 35, 40, 45, 50, 60, 70, 80, 90, 100
- 090: Frame size: 042, 060, 090, 115, 140, 180, 220
- B: Series name VRB Series
- VR: Model name for ABLE reducer

*1) Adapter flange code
Adapter flange code varies depending on the motor

*2) For all washdown intensive and food grade options, refer to pages 36 and 37

Contact us for additional information or refer to our online reducer selection tool.
Selection tool www.nidec-shimpo.co.jp/selection/eng

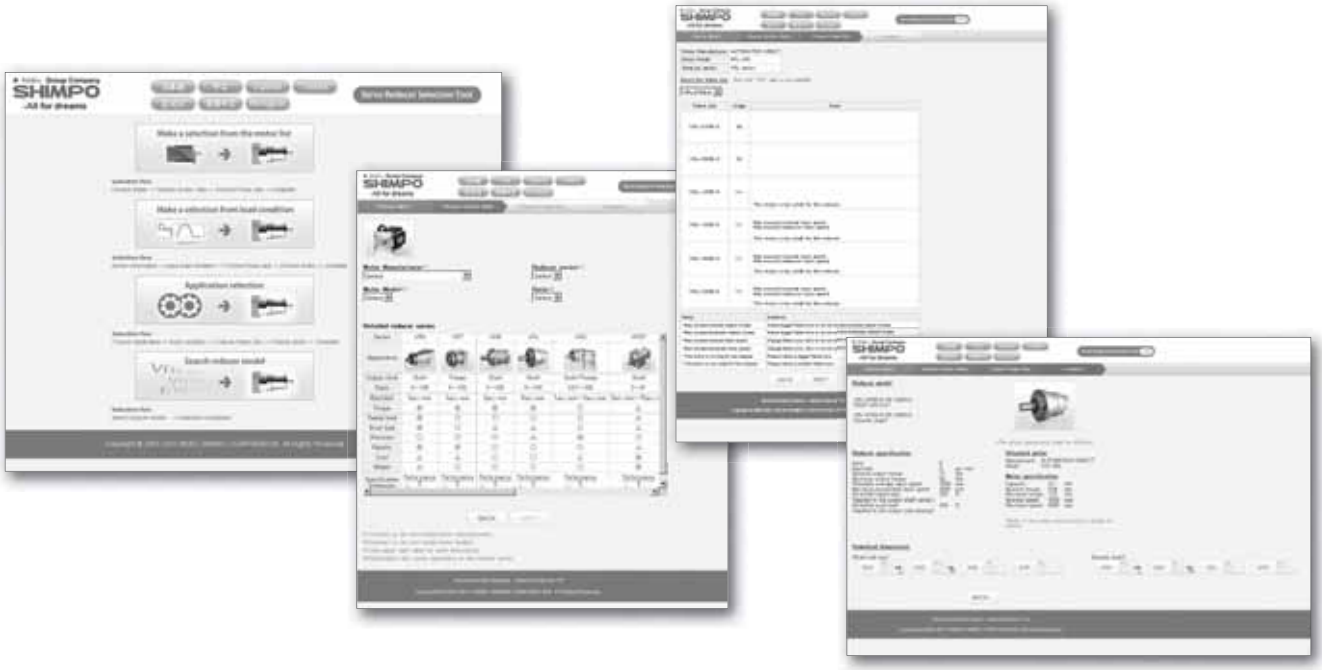

VRB-042 – 1-Stage Specifications

Frame Size	**042**									
Stage	**1-Stage**									
Ratio	Units	Notes	3	4	5	6	7	8	9	10
Nominal Output Torque	[Nm]	*1	6	9	9	9	9	9	6	6
Maximum Acceleration Torque	[Nm]	*2	12	18	18	18	18	18	12	12
Emergency Stop Torque	[Nm]	*3	30	35	35	35	35	35	30	30
Nominal Input Speed	[rpm]	*4	4000							
Maximum Input Speed	[rpm]	*5	8000							
No Load Running Torque	[Nm]	*6	0.03							
Permitted Radial Load	[N]	*7	240	270	290	310	320	340	350	360
Permitted Axial Load	[N]	*8	270	300	330	360	380	410	430	450
Maximum Radial Load	[N]	*9	710							
Maximum Axial Load	[N]	*10	640							
Moment of Inertia (≤Ø 8)	[kgcm2]	--	0.053	0.041	0.036	0.034	0.032	0.031	0.031	0.030
Moment of Inertia (≤ Ø 14)	[kgcm2]	--	0.091	0.079	0.074	0.072	0.071	0.070	0.069	0.069
Efficiency	[%]	*11	95							
Torsional Rigidity	[Nm/arc-min]	*12	2							
Maximum Torsional Backlash	[arc-min]	--	≤ 3							
Noise Level	[dB]	*13	61							
Protection Class	--	*14	IP54 (IP65)							
Ambient Temperature	[°C]	--	0-40							
Permitted Housing Temperature	[°C]	--	90							
Weight	[kg]	*15	0.6							

VRB-042 – 2-Stage Specifications

Frame Size	**042**									
Stage	**2-Stage**									
Ratio	Units	Notes	15	16	20	25	28	30	35	40
Nominal Output Torque	[Nm]	*1	6	9	9	9	9	6	9	9
Maximum Acceleration Torque	[Nm]	*2	12	18	18	18	18	12	18	18
Emergency Stop Torque	[Nm]	*3	30	35	35	35	35	30	35	35
Nominal Input Speed	[rpm]	*4	4000							
Maximum Input Speed	[rpm]	*5	8000							
No Load Running Torque	[Nm]	*6	0.01							
Permitted Radial Load	[N]	*7	410	420	460	490	510	520	550	570
Permitted Axial Load	[N]	*8	540	550	610	640	640	640	640	640
Maximum Radial Load	[N]	*9	710							
Maximum Axial Load	[N]	*10	640							
Moment of Inertia (≤Ø 8)	[kgcm2]	--	0.035	0.038	0.034	0.034	0.038	0.030	0.034	0.030
Moment of Inertia (≤ Ø 14)	[kgcm2]	--	--	--	--	--	--	--	--	--
Efficiency	[%]	*11	90							
Torsional Rigidity	[Nm/arc-min]	*12	2							
Maximum Torsional Backlash	[arc-min]	--	≤ 5							
Noise Level	[dB]	*13	61							
Protection Class	--	*14	IP54 (IP65)							
Ambient Temperature	[°C]	--	0-40							
Permitted Housing Temperature	[°C]	--	90							
Weight	[kg]	*15	0.7							

VRB-042 – 2-Stage Specifications

Frame Size	**042**								
Stage	**2-Stage**								
Ratio	Units	Notes	45	50	60	70	80	90	100
Nominal Output Torque	[Nm]	*1	6	9	9	9	9	6	6
Maximum Acceleration Torque	[Nm]	*2	12	18	18	18	18	12	12
Emergency Stop Torque	[Nm]	*3	30	35	35	35	35	30	30
Nominal Input Speed	[rpm]	*4	4000						
Maximum Input Speed	[rpm]	*5	8000						
No Load Running Torque	[Nm]	*6	0.01						
Permitted Radial Load	[N]	*7	600	620	660	690	710	710	710
Permitted Axial Load	[N]	*8	640	640	640	640	640	640	640
Maximum Radial Load	[N]	*9	710						
Maximum Axial Load	[N]	*10	640						
Moment of Inertia (≤Ø 8)	[kgcm2]	--	0.034	0.030	0.030	0.030	0.030	0.030	0.030
Moment of Inertia (≤ Ø 14)	[kgcm2]	--	--	--	--	--	--	--	--
Efficiency	[%]	*11	90						
Torsional Rigidity	[Nm/arc-min]	*12	2						
Maximum Torsional Backlash	[arc-min]	--	≤ 5						
Noise Level	[dB]	*13	61						
Protection Class	--	*14	IP54 (IP65)						
Ambient Temperature	[°C]	--	0-40						
Permitted Housing Temperature	[°C]	--	90						
Weight	[kg]	*15	0.7						

*1) At nominal input speed, service life is 20,000 hours
*2) The maximum torque when starting or stopping operation
*3) The maximum torque allowed under a stress situation (Permitted 1,000 times during service life)
*4) The average input speed
*5) The maximum intermittent input speed
*6) This is the torque at no load applied on the input shaft. The input speed is 4,000 rpm for VRB 042
*7) At this load and nominal input speed, service life will be 20,000 hours. (The radial load applied to the output side bearing)
*8) At this load and nominal input speed, service life will be 20,000 hours. (The axial load applied to the output shaft center)
*9) The maximum radial load that the reducer can accept
*10) The maximum axial load that the reducer can accept
*11) The efficiency at the nominal torque rating
*12) This does not include the lost motion
*13) Contact NIDEC-SHIMPO for the testing conditions and environment
*14) IP65 (wash-down) is available as an option. Contact NIDEC-SHIMPO for more details and our food grade options
*15) The weight may vary slightly between models

VRB-042 – 1-Stage Dimensions

Input shaft bore ≦ϕ8

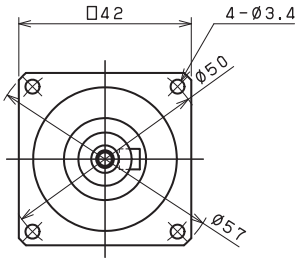

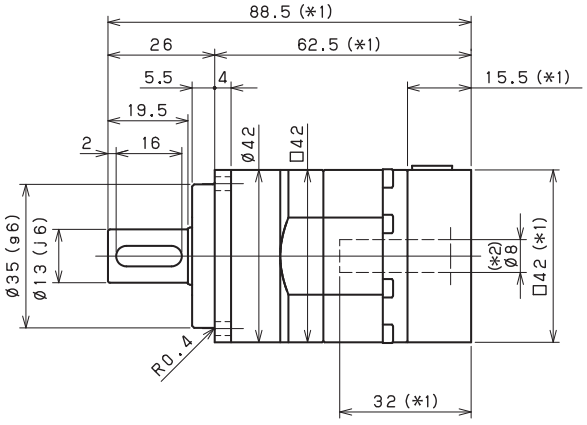

Input shaft bore ≦ϕ14

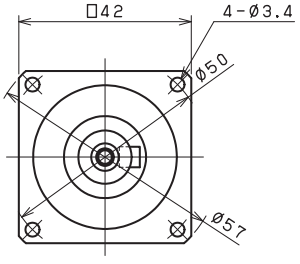

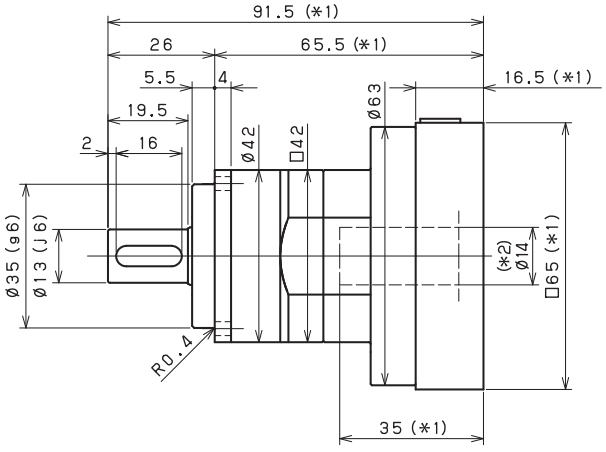

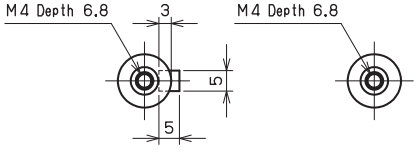

Shaft with key

Smooth shaft

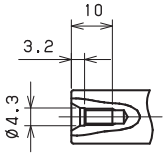

*1) Length will vary depending on motor

*2) Bushing will be inserted to adapt to motor shaft

VRB-042 – 2-Stage Dimensions

Input shaft bore ≦ϕ8

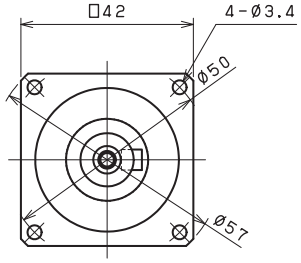

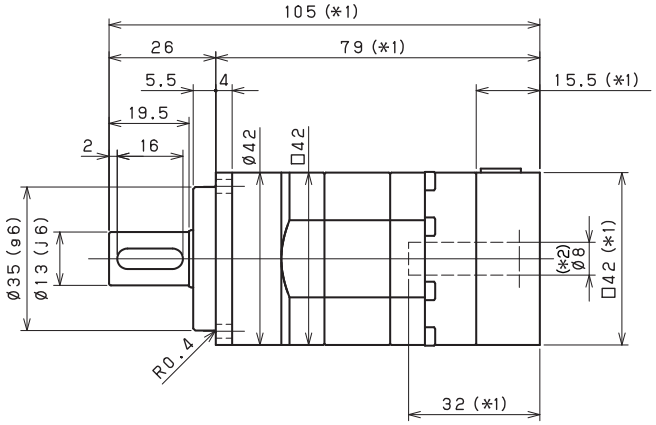

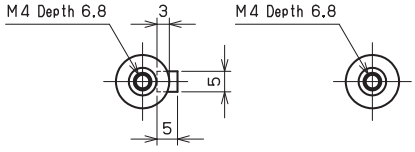

Shaft with key

Smooth shaft

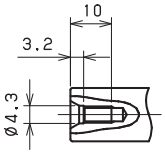

*1) Length will vary depending on motor

*2) Bushing will be inserted to adapt to motor shaft

VRB-042 – 1-Stage Adapter Dimensions

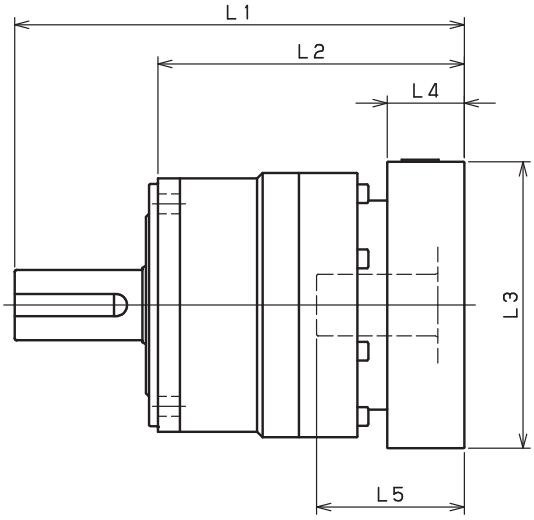

Model number	**: Adapter code	1-Stage					
		L1	L*	L2	L3	L4	L5
VRB-042-□-□-S8** (Input shaft bore ≦ φ8)	ZA•ZC•ZD•ZF•ZG•ZL•ZM•ZN•ZQ	88.5	73	64	□42	15.5	32
	ZB•ZE•ZH•ZJ•ZK	93.5	73	69	□42	20.5	37
	BA•BB•BD•BE•BG•BH•BJ	88.5	73	64	□60	15.5	32
	BC•BF	93.5	73	69	□60	20.5	37
VRB-042-□-□-14** (Input shaft bore ≦ φ14)	BA•BB•BD•BE•BF•BG•BJ•BK•BP	91.5	75	67	□65	16.5	35
	BC•BH•BM•BN	96.5	75	72	□65	21.5	40
	BL	101.5	75	77	□65	26.5	45

*1) Single reduction : 1/3~ 1/10

*2) Bushing will be inserted to adapt to motor shaft

For an explanation on the Adapter Flange Code, please turn to page 422.

A more comprehensive adapter flange offering can be found using the NIDEC-SHIMPO Online Selector Tool. The variety is constantly expanding and being updated on the Selector Tool. If you have any questions or need any support, contact NIDEC-SHIMPO.

VRB-042 – 2-Stage Adapter Dimensions

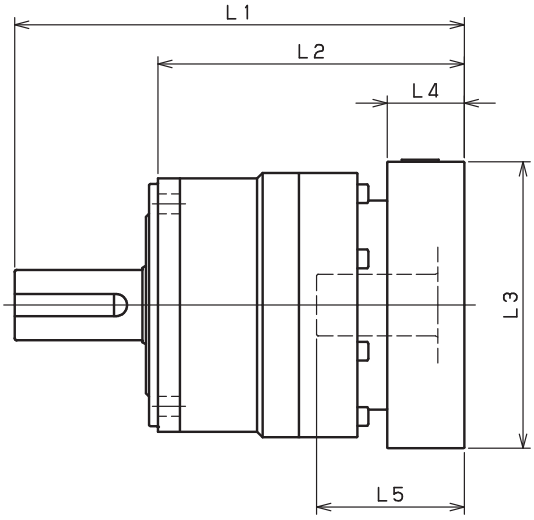

Model number	**: Adapter code	2-Stage					
		L1	L*	L2	L3	L4	L5
VRB-042-□-□-S8** (Input shaft bore ≦ φ8)	ZA•ZC•ZD•ZF•ZG•ZL•ZM•ZN•ZQ	105	89.5	80.5	□42	15.5	32
	ZB•ZE•ZH•ZJ•ZK	110	89.5	85.5	□42	20.5	37
	BA•BB•BD•BE•BG•BH•BJ	105	89.5	80.5	□60	15.5	32
	BC•BF	110	89.5	85.5	□60	20.5	37
VRB-042-□-□-14** (Input shaft bore ≦ φ14)	BA•BB•BD•BE•BF•BG•BJ•BK•BP	--	--	--	--	--	--
	BC•BH•BM•BN	--	--	--	--	--	--
	BL	--	--	--	--	--	--

*1) Double reduction : 1/15~ 1/100

*2) Bushing will be inserted to adapt to motor shaft

For an explanation on the Adapter Flange Code, please turn to page 422.

A more comprehensive adapter flange offering can be found using the NIDEC-SHIMPO Online Selector Tool. The variety is constantly expanding and being updated on the Selector Tool. If you have any questions or need any support, contact NIDEC-SHIMPO.

VRB-060 – 1-Stage Specifications

Frame Size	**060**									
Stage	**1-Stage**									
Ratio	Unit	Note	3	4	5	6	7	8	9	10
Nominal Output Torque	[Nm]	*1	18	27	27	27	27	27	18	18
Maximum Acceleration Torque	[Nm]	*2	35	50	50	50	50	50	35	35
Emergency Stop Torque	[Nm]	*3	80	100	100	100	100	100	80	80
Nominal Input Speed	[rpm]	*4	3000							
Maximum Input Speed	[rpm]	*5	6000							
No Load Running Torque	[Nm]	*6	0.15							
Permitted Radial Load	[N]	*7	430	470	510	540	570	600	620	640
Permitted Axial Load	[N]	*8	310	360	390	430	460	480	510	530
Maximum Radial Load	[N]	*9	1200							
Maximum Axial Load	[N]	*10	1100							
Moment of Inertia (≤Ø 8)	[kgcm2]	--	0.140	0.095	0.077	0.068	0.062	0.059	0.057	0.056
Moment of Inertia (≤ Ø 14)	[kgcm2]	--	0.220	0.170	0.160	0.150	0.140	0.140	0.140	0.140
Moment of Inertia (≤ Ø 19)	[kgcm2]	--	0.430	0.380	0.360	0.360	0.350	0.350	0.340	0.340
Efficiency	[%]	*11	95							
Torsional Rigidity	[Nm/arc-min]	*12	3							
Maximum Torsional Backlash	[arc-min]	--	≤ 3							
Noise Level	[dB]	*13	66							
Protection Class	--	*14	IP54 (IP65)							
Ambient Temperature	[°C]	--	0-40							
Permitted Housing Temperature	[°C]	--	90							
Weight	[kg]	*15	1.4							

VRB-060 – 2-Stage Specifications

Frame Size	**060**									
Stage	**2-Stage**									
Ratio	Unit	Note	15	16	20	25	28	30	35	40
Nominal Output Torque	[Nm]	*1	18	27	27	27	27	18	27	27
Maximum Acceleration Torque	[Nm]	*2	35	50	50	50	50	35	50	50
Emergency Stop Torque	[Nm]	*3	80	100	100	100	100	80	100	100
Nominal Input Speed	[rpm]	*4	3000							
Maximum Input Speed	[rpm]	*5	6000							
No Load Running Torque	[Nm]	*6	0.04							
Permitted Radial Load	[N]	*7	740	750	810	870	910	930	980	1000
Permitted Axial Load	[N]	*8	630	650	720	790	830	860	920	970
Maximum Radial Load	[N]	*9	1200							
Maximum Axial Load	[N]	*10	1100							
Moment of Inertia (≤Ø 8)	[kgcm2]	--	0.055	0.057	0.054	0.053	0.055	0.049	0.053	0.049
Moment of Inertia (≤ Ø 14)	[kgcm2]	--	0.140	0.140	0.130	0.130	0.140	0.130	0.130	0.130
Moment of Inertia (≤ Ø 19)	[kgcm2]	--	--	--	--	--	--	--	--	--
Efficiency	[%]	*11	90							
Torsional Rigidity	[Nm/arc-min]	*12	3							
Maximum Torsional Backlash	[arc-min]	--	≤ 3							
Noise Level	[dB]	*13	66							
Protection Class	--	*14	IP54 (IP65)							
Ambient Temperature	[°C]	--	0-40							
Permitted Housing Temperature	[°C]	--	90							
Weight	[kg]	*15	1.6							

VRB-060 – 2-Stage Specifications

Frame Size	**060**								
Stage	**2-Stage**								
Ratio	Unit	Note	45	50	60	70	80	90	100
Nominal Output Torque	[Nm]	*1	18	27	27	27	27	18	18
Maximum Acceleration Torque	[Nm]	*2	35	50	50	50	50	35	35
Emergency Stop Torque	[Nm]	*3	80	100	100	100	100	80	80
Nominal Input Speed	[rpm]	*4	3000						
Maximum Input Speed	[rpm]	*5	6000						
No Load Running Torque	[Nm]	*6	0.04						
Permitted Radial Load	[N]	*7	1100	1100	1200	1200	1200	1200	1200
Permitted Axial Load	[N]	*8	1000	1100	1100	1100	1100	1100	1100
Maximum Radial Load	[N]	*9	1200						
Maximum Axial Load	[N]	*10	1100						
Moment of Inertia (≤Ø 8)	[kgcm2]	--	0.053	0.049	0.049	0.049	0.049	0.049	0.049
Moment of Inertia (≤ Ø 14)	[kgcm2]	--	0.130	0.130	0.130	0.130	0.130	0.130	0.130
Moment of Inertia (≤ Ø 19)	[kgcm2]	--	--	--	--	--	--	--	--
Efficiency	[%]	*11	90						
Torsional Rigidity	[Nm/arc-min]	*12	3						
Maximum Torsional Backlash	[arc-min]	--	≤ 3						
Noise Level	[dB]	*13	66						
Protection Class	--	*14	IP54 (IP65)						
Ambient Temperature	[°C]	--	0-40						
Permitted Housing Temperature	[°C]	--	90						
Weight	[kg]	*15	1.6						

*1) At nominal input speed, service life is 20,000 hours
*2) The maximum torque when starting or stopping operation
*3) The maximum torque allowed under a stress situation (Permitted 1,000 times during service life)
*4) The average input speed
*5) The maximum intermittent input speed
*6) This is the torque at no load applied on the input shaft. The input speed is 3,000 rpm for VRB 060
*7) At this load and nominal input speed, service life will be 20,000 hours. (The radial load applied to the output side bearing)
*8) At this load and nominal input speed, service life will be 20,000 hours. (The axial load applied to the output shaft center)
*9) The maximum radial load that the reducer can accept
*10) The maximum axial load that the reducer can accept
*11) The efficiency at the nominal torque rating
*12) This does not include the lost motion
*13) Contact NIDEC-SHIMPO for the testing conditions and environment
*14) IP65 (wash-down) is available as an option. Contact NIDEC-SHIMPO for more details and our food grade options
*15) The weight may vary slightly between models

VRB-060 – 1-Stage Dimensions

Input shaft bore ≦φ8

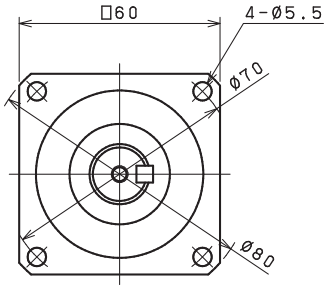

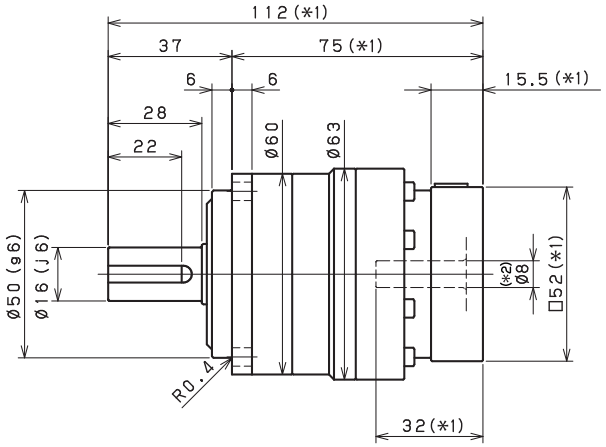

Input shaft bore ≦φ14

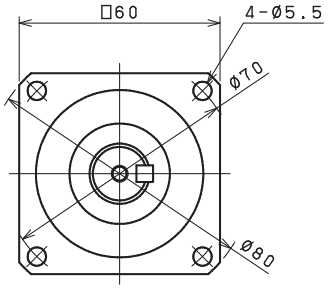

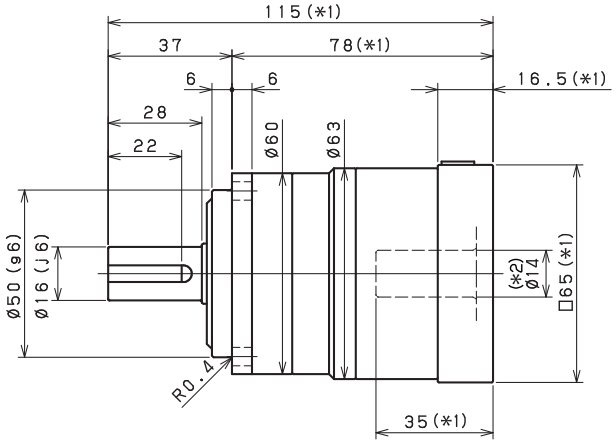

Input shaft bore ≦φ19

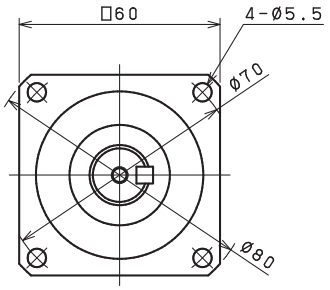

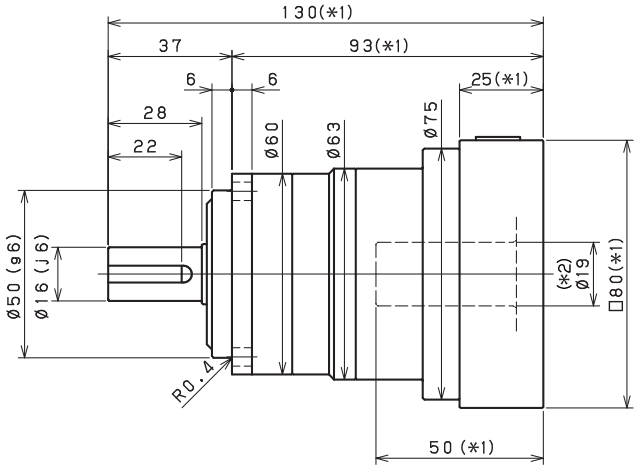

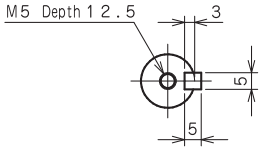

Shaft with key

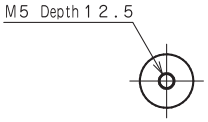

Smooth shaft

*1) Length will vary depending on motor

*2) Bushing will be inserted to adapt to motor shaft

VRB-060 – 2-Stage Dimensions

Input shaft bore ≦φ8

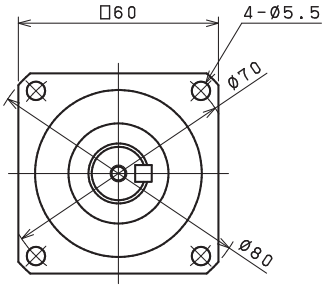

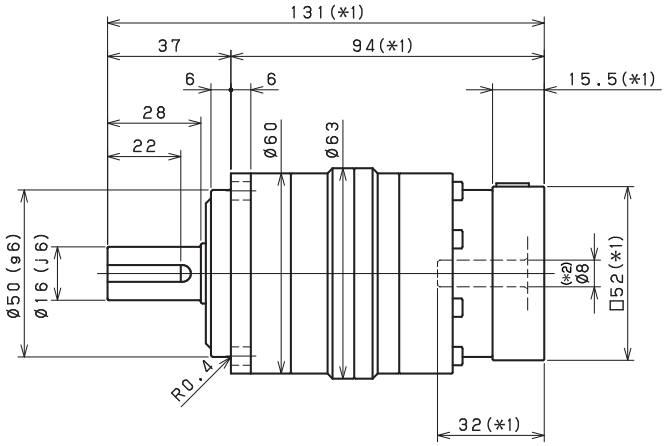

Input shaft bore ≦φ14

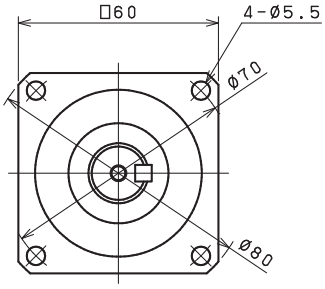

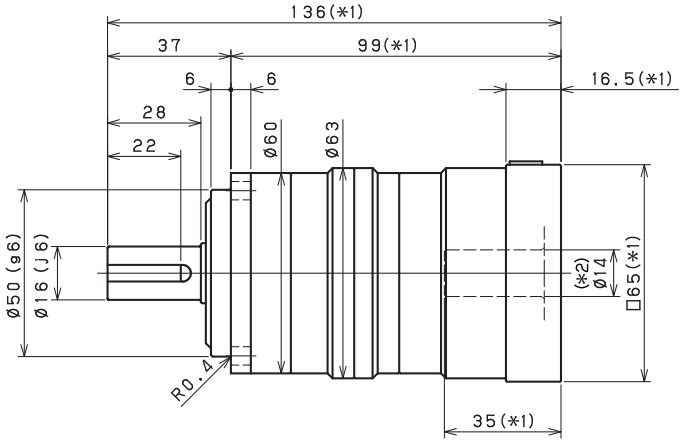

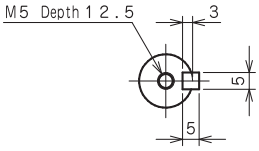

Shaft with key

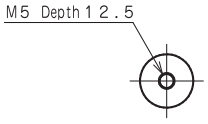

Smooth shaft

*1) Length will vary depending on motor

*2) Bushing will be inserted to adapt to motor shaft

VRB

VRB-060 – 1-Stage Adapter Dimensions

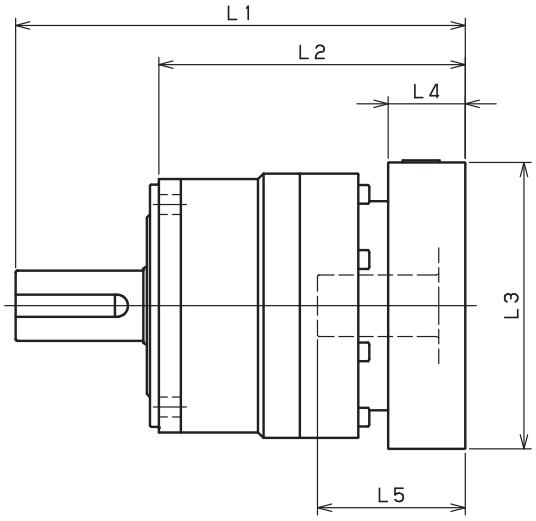

Model number	**: Adapter code	1-Stage					
		L1	L*	L2	L3	L4	L5
VRB-060-□-□-8** (Input shaft bore ≦ φ8)	AA•AC•AD•AF•AG•AL•AM•AN•AQ	112	96.5	75	□52	15.5	32
	AB•AE•AH•AJ•AK	117	96.5	80	□52	20.5	37
	BA•BB•BD•BE•BG•BH•BJ	112	96.5	75	□60	15.5	32
	BC•BF	117	96.5	80	□60	20.5	37
	CA	117	96.5	80	□70	20.5	37
VRB-060-□-□-14** (Input shaft bore ≦ φ14)	BA•BB•BD•BE•BF•BG•BH•BJ•BK•BP	115	98.5	78	□65	16.5	35
	BC•BH•BM•BN	120	98.5	83	□65	21.5	40
	BL	125	98.5	88	□65	26.5	45
	CA•CC	115	98.5	78	□70	16.5	35
	CB	120	98.5	83	□70	21.5	40
	DA•DB•DC•DD•DF•DH•DJ	115	98.5	78	□80	16.5	35
	DE•DL	120	98.5	83	□80	21.5	40
	DG•DK	125	98.5	88	□80	26.5	45
	EA•EB•EC•EF•EG•EK•EL	115	98.5	78	□90	16.5	35
	EJ•EM	120	98.5	83	□90	21.5	40
	ED•EE•EH	125	98.5	88	□90	26.5	45
	FA	115	98.5	78	□100	16.5	35
	FB	125	98.5	88	□100	26.5	45
VRB-060-□-□-19** (Input shaft bore ≦ φ19)	DA•DB•DC	130	105	93	□80	25	50
	DD	140	105	103	□80	35	60
	DE	135	105	98	□80	30	55
	EA	135	105	98	□90	30	55
	EB•ED	130	105	93	□90	25	50
	EC	140	105	103	□90	35	60
	FA	130	105	93	□100	25	50
	FB	140	105	103	□100	35	60

*1) Single reduction : 1/3~ 1/10

*2) Bushing will be inserted to adapt to motor shaft

For an explanation on the Adapter Flange Code, please turn to page 422.

A more comprehensive adapter flange offering can be found using the NIDEC-SHIMPO Online Selector Tool. The variety is constantly expanding and being updated on the Selector Tool. If you have any questions or need any support, contact NIDEC-SHIMPO.

VRB-060 – 2-Stage Adapter Dimensions

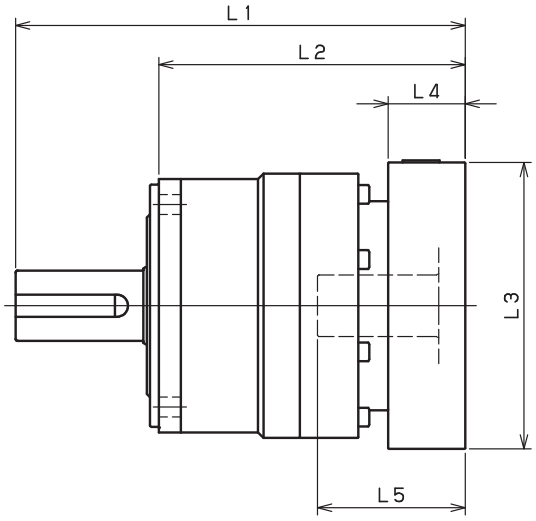

Model number	**: Adapter code	2-Stage					
		L1	L*	L2	L3	L4	L5
VRB-060-□-□-8** (Input shaft bore ≦ φ8)	AA•AC•AD•AF•AG•AL•AM•AN•AQ	131	115.5	94	□52	15.5	32
	AB•AE•AH•AJ•AK	136	115.5	99	□52	20.5	37
	BA•BB•BD•BE•BG•BH•BJ	131	115.5	94	□60	15.5	32
	BC•BF	136	115.5	99	□60	20.5	37
	CA	136	115.5	99	□70	20.5	37
VRB-060-□-□-14** (Input shaft bore ≦ φ14)	BA•BB•BD•BE•BF•BG•BH•BJ•BK•BP	136	119.5	99	□65	16.5	35
	BC•BH•BM•BN	141	119.5	104	□65	21.5	40
	BL	146	119.5	109	□65	26.5	45
	CA•CC	136	119.5	99	□70	16.5	35
	CB	141	119.5	104	□70	21.5	40
	DA•DB•DC•DD•DF•DH•DJ	136	119.5	99	□80	16.5	35
	DE•DL	141	119.5	104	□80	21.5	40
	DG•DK	146	119.5	109	□80	26.5	45
	EA•EB•EC•EF•EG•EK•EL	136	119.5	99	□90	16.5	35
	EJ•EM	141	119.5	104	□90	21.5	40
	ED•EE•EH	146	119.5	109	□90	26.5	45
	FA	136	119.5	99	□100	16.5	35
	FB	146	119.5	109	□100	26.5	45
VRB-060-□-□-19** (Input shaft bore ≦ φ19)	DA•DB•DC	151	126	114	□80	25	50
	DD	161	126	124	□80	35	60
	DE	156	126	119	□80	30	55
	EA	156	126	119	□90	30	55
	EB•ED	151	126	114	□90	25	50
	EC	161	126	124	□90	35	60
	FA	151	126	114	□100	25	50
	FB	161	126	124	□100	35	60

*1) Double reduction : 1/15~ 1/100

*2) Bushing will be inserted to adapt to motor shaft

For an explanation on the Adapter Flange Code, please turn to page 422.

A more comprehensive adapter flange offering can be found using the NIDEC-SHIMPO Online Selector Tool. The variety is constantly expanding and being updated on the Selector Tool. If you have any questions or need any support, contact NIDEC-SHIMPO.

VRB-090 – 1-Stage Specifications

Frame Size	**090**									
Stage	**1-Stage**									
Ratio	Unit	Note	3	4	5	6	7	8	9	10
Nominal Output Torque	[Nm]	*1	50	75	75	75	75	75	50	50
Maximum Acceleration Torque	[Nm]	*2	80	125	125	125	125	125	80	80
Emergency Stop Torque	[Nm]	*3	200	250	250	250	250	250	200	200
Nominal Input Speed	[rpm]	*4	3000							
Maximum Input Speed	[rpm]	*5	6000							
No Load Running Torque	[Nm]	*6	0.35							
Permitted Radial Load	[N]	*7	810	890	960	1000	1100	1100	1200	1200
Permitted Axial Load	[N]	*8	930	1100	1200	1300	1300	1400	1500	1600
Maximum Radial Load	[N]	*9	2400							
Maximum Axial Load	[N]	*10	2200							
Moment of Inertia (≤Ø 8)	[kgcm2]	--	--	--	--	--	--	--	--	--
Moment of Inertia (≤ Ø 14)	[kgcm2]	--	0.720	0.490	0.400	0.360	0.320	0.310	0.290	0.290
Moment of Inertia (≤ Ø 19)	[kgcm2]	--	1.200	0.950	0.860	0.820	0.790	0.770	0.760	0.750
Moment of Inertia (≤ Ø 28)	[kgcm2]	--	3.200	3.000	2.900	2.800	2.800	2.800	2.800	2.800
Efficiency	[%]	*11	95							
Torsional Rigidity	[Nm/arc-min]	*12	10							
Maximum Torsional Backlash	[arc-min]	--	≤ 3							
Noise Level	[dB]	*13	67							
Protection Class	--	*14	IP54 (IP65)							
Ambient Temperature	[°C]	--	0-40							
Permitted Housing Temperature	[°C]	--	90							
Weight	[kg]	*15	3.7							

VRB-090 – 2-Stage Specifications

Frame Size	**090**									
Stage	**2-Stage**									
Ratio	Unit	Note	15	16	20	25	28	30	35	40
Nominal Output Torque	[Nm]	*1	50	75	75	75	75	50	75	75
Maximum Acceleration Torque	[Nm]	*2	80	125	125	125	125	80	125	125
Emergency Stop Torque	[Nm]	*3	200	250	250	250	250	200	250	250
Nominal Input Speed	[rpm]	*4	3000							
Maximum Input Speed	[rpm]	*5	6000							
No Load Running Torque	[Nm]	*6	0.06							
Permitted Radial Load	[N]	*7	1400	1400	1500	1600	1700	1700	1800	1900
Permitted Axial Load	[N]	*8	1900	1900	2100	2200	2200	2200	2200	2200
Maximum Radial Load	[N]	*9	2400							
Maximum Axial Load	[N]	*10	2200							
Moment of Inertia (≤Ø 8)	[kgcm2]	--	0.130	0.150	0.130	0.120	0.140	0.100	0.120	0.099
Moment of Inertia (≤ Ø 14)	[kgcm2]	--	0.280	0.300	0.280	0.280	0.290	0.250	0.270	0.250
Moment of Inertia (≤ Ø 19)	[kgcm2]	--	0.720	0.740	0.720	0.710	0.730	0.700	0.710	0.700
Moment of Inertia (≤ Ø 28)	[kgcm2]	--	--	--	--	--	--	--	--	--
Efficiency	[%]	*11	90							
Torsional Rigidity	[Nm/arc-min]	*12	10							
Maximum Torsional Backlash	[arc-min]	--	≤ 3							
Noise Level	[dB]	*13	67							
Protection Class	--	*14	IP54 (IP65)							
Ambient Temperature	[°C]	--	0-40							
Permitted Housing Temperature	[°C]	--	90							
Weight	[kg]	*15	4.2							

VRB-090 – 2-Stage Specifications

Frame Size	090								
Stage	**2-Stage**								
Ratio	Unit	Note	45	50	60	70	80	90	100
Nominal Output Torque	[Nm]	*1	50	75	75	75	75	50	50
Maximum Acceleration Torque	[Nm]	*2	80	125	125	125	125	80	80
Emergency Stop Torque	[Nm]	*3	200	250	250	250	250	200	200
Nominal Input Speed	[rpm]	*4	3000						
Maximum Input Speed	[rpm]	*5	6000						
No Load Running Torque	[Nm]	*6	0.06						
Permitted Radial Load	[N]	*7	2000	2100	2200	2300	2400	2400	2400
Permitted Axial Load	[N]	*8	2200	2200	2200	2200	2200	2200	2200
Maximum Radial Load	[N]	*9	2400						
Maximum Axial Load	[N]	*10	2200						
Moment of Inertia (≤Ø 8)	[kgcm2]	--	0.120	0.098	0.098	0.097	0.097	0.097	0.097
Moment of Inertia (≤ Ø 14)	[kgcm2]	--	0.270	0.250	0.250	0.250	0.250	0.250	0.250
Moment of Inertia (≤ Ø 19)	[kgcm2]	--	0.710	0.690	0.690	0.690	0.690	0.690	0.690
Moment of Inertia (≤ Ø 28)	[kgcm2]	--	--	--	--	--	--	--	--
Efficiency	[%]	*11	90						
Torsional Rigidity	[Nm/arc-min]	*12	10						
Maximum Torsional Backlash	[arc-min]	--	≤ 3						
Noise Level	[dB]	*13	67						
Protection Class	--	*14	IP54 (IP65)						
Ambient Temperature	[°C]	--	0-40						
Permitted Housing Temperature	[°C]	--	90						
Weight	[kg]	*15	4.2						

*1) At nominal input speed, service life is 20,000 hours
*2) The maximum torque when starting or stopping operation
*3) The maximum torque allowed under a stress situation (Permitted 1,000 times during service life)
*4) The average input speed
*5) The maximum intermittent input speed
*6) This is the torque at no load applied on the input shaft. The input speed is 3,000 rpm for VRB 090
*7) At this load and nominal input speed, service life will be 20,000 hours. (The radial load applied to the output side bearing)
*8) At this load and nominal input speed, service life will be 20,000 hours. (The axial load applied to the output shaft center)
*9) The maximum radial load that the reducer can accept
*10) The maximum axial load that the reducer can accept
*11) The efficiency at the nominal torque rating
*12) This does not include the lost motion
*13) Contact NIDEC-SHIMPO for the testing conditions and environment
*14) IP65 (wash-down) is available as an option. Contact NIDEC-SHIMPO for more details and our food grade options
*15) The weight may vary slightly between models

VRB-090 – 1-Stage Dimensions

Input shaft bore ≦φ14

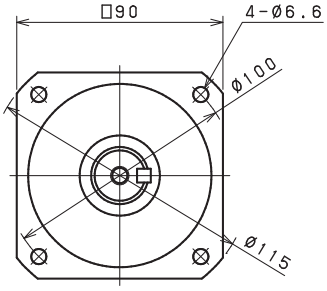

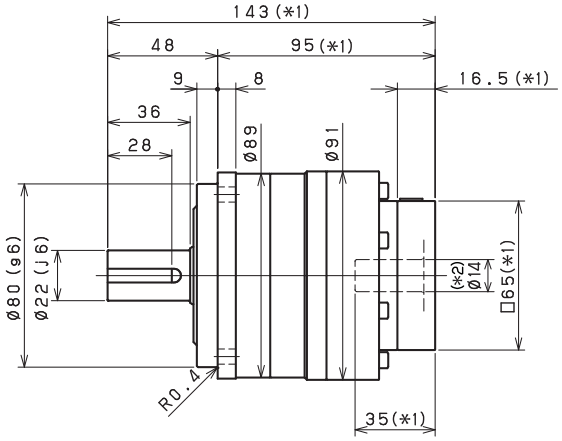

Input shaft bore ≦φ19

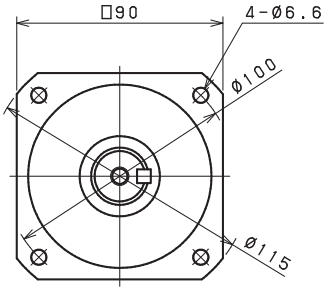

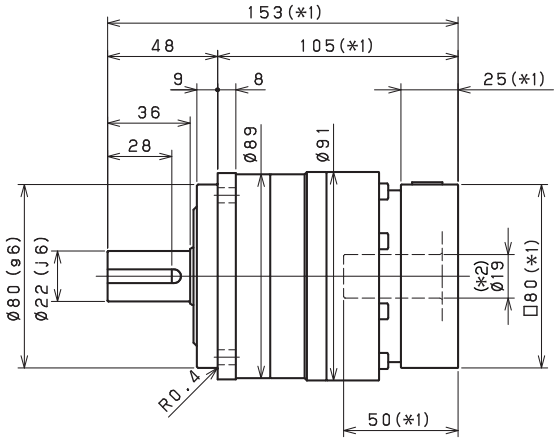

Input shaft bore ≦φ28

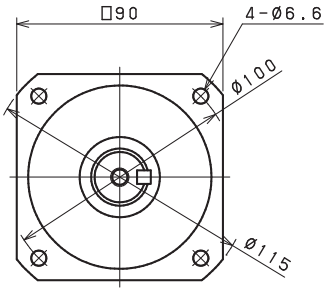

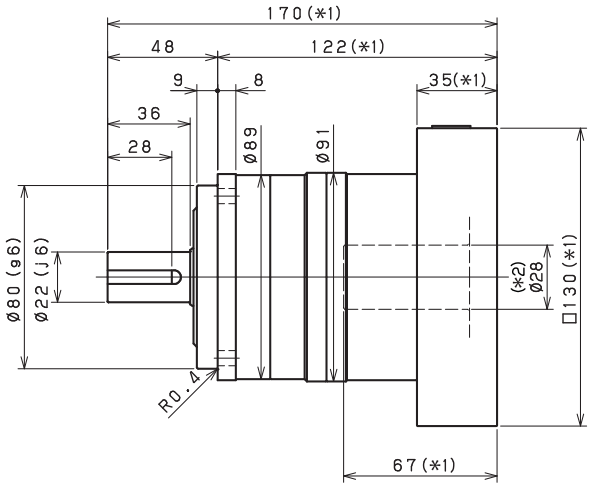

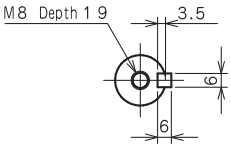

Shaft with key

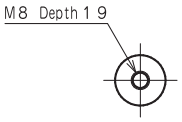

Smooth shaft

*1) Length will vary depending on motor

*2) Bushing will be inserted to adapt to motor shaft

VRB-090 – 2-Stage Dimensions

Input shaft bore ≦φ8

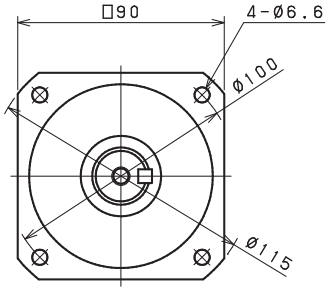

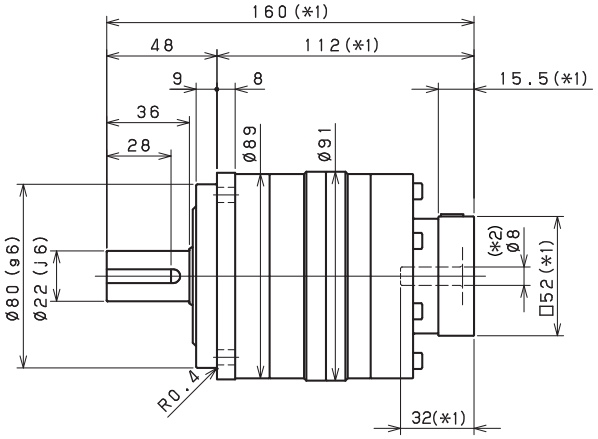

Input shaft bore ≦φ14

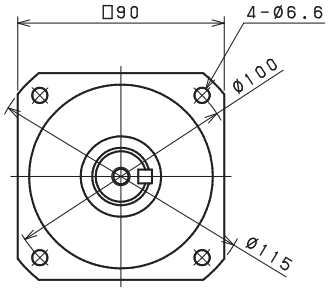

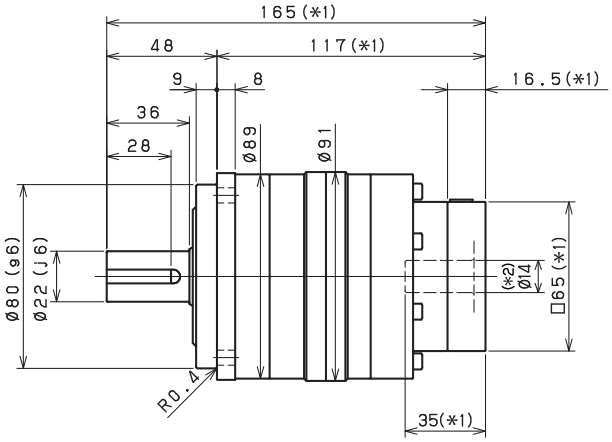

Input shaft bore ≦φ19

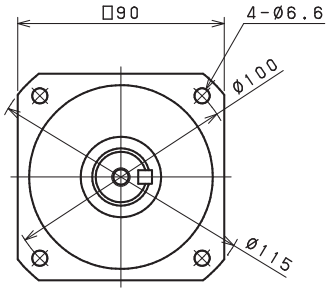

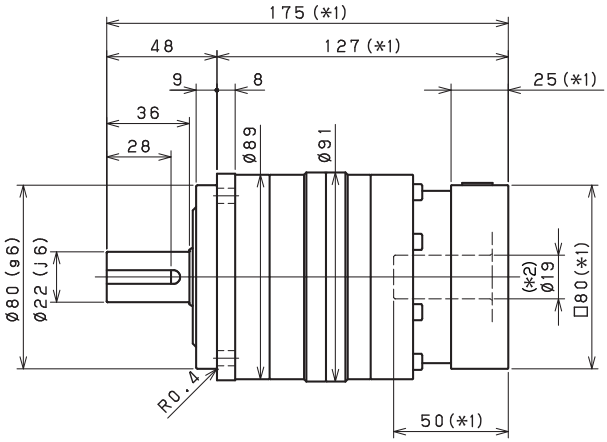

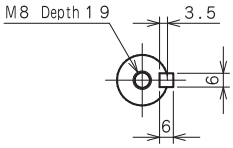

Shaft with key

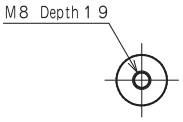

Smooth shaft

*1) Length will vary depending on motor

*2) Bushing will be inserted to adapt to motor shaft

VRB-090 – 1-Stage Adapter Dimensions

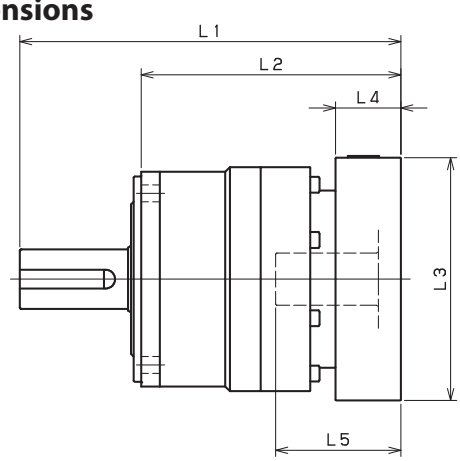

Model number	**: Adapter code	1-Stage					
		L1	L*	L2	L3	L4	L5
VRB-090-□-□-8** (Input shaft bore ≦ φ8)	AA•AC•AD•AF•AG•AL•AM•AN•AQ	--	--	--	--	--	--
	AB•AE•AH•AJ•AK	--	--	--	--	--	--
	BA•BB•BD•BE•BG•BH•BJ	--	--	--	--	--	--
	CA	--	--	--	--	--	--
VRB-090-□-□-14** (Input shaft bore ≦ φ14)	BA•BB•BD•BE•BF•BG•BH•BJ•BK•BP	143	126.5	95	□65	16.5	35
	BC•BH•BM•BN	148	126.5	100	□65	21.5	40
	CA•CC	143	126.5	95	□70	16.5	35
	DA•DB•DC•DD•DF•DH•DJ	143	126.5	95	□80	16.5	35
	EA•EB•EC•EF•EG•EK•EL	143	126.5	95	□90	16.5	35
	FA	143	126.5	95	□100	16.5	35
	FB	153	126.5	105	□100	26.5	45
	JA	158	126.5	110	□150	31.5	50
VRB-090-□-□-19** (Input shaft bore ≦ φ19)	DA•DB•DC	153	128	105	□80	25	50
	EB•ED	153	128	105	□90	25	50
	FA	153	128	105	□100	25	50
	FB	163	128	115	□100	35	60
	GA•GC•GH	158	128	110	□115	30	55
	GB•GD•GJ	153	128	105	□115	25	50
	GE•GF	163	128	115	□115	35	60
	HA	153	128	105	□130	25	50
	HB	168	128	120	□130	40	65
	HC•HD•HE	158	128	110	□130	30	55
	JA	163	128	115	□150	35	60
	JB	168	128	120	□150	40	65
VRB-090-□-□-28** (Input shaft bore ≦ φ28)	FA•FB•FC	170	135	122	□100	35	67
	FD•FE	165	135	117	□100	30	62
	GA•GB•GC•GD•GE•GF•GG•GH	170	135	122	□115	35	67
	HA•HC•HD	170	135	122	□130	35	67
	HB	180	135	132	□130	45	77
	HE	185	135	137	□130	50	82
	HF	165	135	117	□130	30	62
	JA•JB•JC•JF	170	135	122	□150	35	67
	JD	190	135	142	□150	55	87
	JE	180	135	132	□150	45	77

*1) Single reduction : 1/3~ 1/10 *2) Bushing will be inserted to adapt to motor shaft

For an explanation on the Adapter Flange Code, please turn to page 422.

A more comprehensive adapter flange offering can be found using the NIDEC-SHIMPO Online Selector Tool. The variety is constantly expanding and being updated on the Selector Tool. If you have any questions or need any support, contact NIDEC-SHIMPO.

VRB-090 – 2-Stage Adapter Dimensions

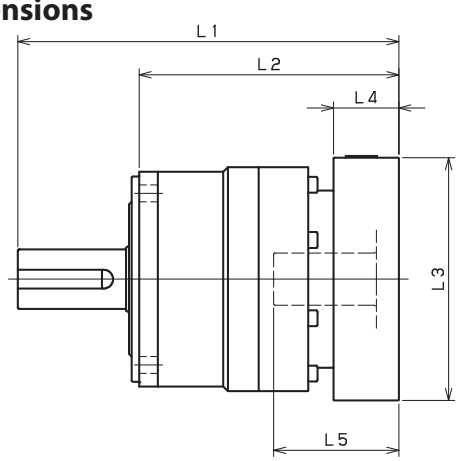

Model number	**: Adapter code	2-Stage					
		L1	L*	L2	L3	L4	L5
VRB-090-□-□-8** (Input shaft bore ≦ φ8)	AA•AC•AD•AF•AG•AL•AM•AN•AQ	160	144.5	112	□52	15.5	32
	AB•AE•AH•AJ•AK	165	144.5	117	□52	20.5	37
	BA•BB•BD•BE•BG•BH•BJ	160	144.5	112	□60	15.5	32
	CA	165	144.5	117	□70	20.5	37
VRB-090-□-□-14** (Input shaft bore ≦ φ14)	BA•BB•BD•BE•BF•BG•BH•BJ•BK•BP	165	148.5	117	□65	16.5	35
	BC•BH•BM•BN	170	148.5	122	□65	21.5	40
	CA•CC	165	148.5	117	□70	16.5	35
	DA•DB•DC•DD•DF•DH•DJ	165	148.5	117	□80	16.5	35
	EA•EB•EC•EF•EG•EK•EL	165	148.5	117	□90	16.5	35
	FA	165	148.5	117	□100	16.5	35
	FB	175	148.5	127	□100	26.5	45
	JA	180	148.5	132	□150	31.5	50
VRB-090-□-□-19** (Input shaft bore ≦ φ19)	DA•DB•DC	175	150	127	□80	25	50
	EB•ED	175	150	127	□90	25	50
	FA	175	150	127	□100	25	50
	FB	185	150	137	□100	35	60
	GA•GC•GH	180	150	132	□115	30	55
	GB•GD•GJ	175	150	127	□115	25	50
	GE•GF	185	150	137	□115	35	60
	HA	175	150	127	□130	25	50
	HB	190	150	142	□130	40	65
	HC•HD•HE	180	150	132	□130	30	55
	JA	185	150	137	□150	35	60
	JB	190	150	142	□150	40	65
VRB-090-□-□-28** (Input shaft bore ≦ φ28)	FA•FB•FC	194	159	146	□100	35	67
	FD•FE	189	159	141	□100	30	62
	GA•GB•GC•GD•GE•GF•GG•GH	194	159	146	□115	35	67
	HA•HC•HD	194	159	146	□130	35	67
	HB	204	159	156	□130	45	77
	HE	209	159	161	□130	50	82
	HF	189	159	141	□130	30	62
	JA•JB•JC•JF	194	159	146	□150	35	67
	JD	214	159	166	□150	55	87
	JE	204	159	156	□150	45	77

*1) Double reduction : 1/15~ 1/100 *2) Bushing will be inserted to adapt to motor shaft

For an explanation on the Adapter Flange Code, please turn to page 422.

A more comprehensive adapter flange offering can be found using the NIDEC-SHIMPO Online Selector Tool. The variety is constantly expanding and being updated on the Selector Tool. If you have any questions or need any support, contact NIDEC-SHIMPO.

VRB-115 – 1-Stage Specifications

Frame Size	**115**									
Stage	**1-Stage**									
Ratio	Unit	Note	3	4	5	6	7	8	9	10
Nominal Output Torque	[Nm]	*1	120	120	180	180	180	180	120	120
Maximum Acceleration Torque	[Nm]	*2	225	330	330	330	330	330	225	225
Emergency Stop Torque	[Nm]	*3	500	625	625	625	625	625	500	500
Nominal Input Speed	[rpm]	*4	3000							
Maximum Input Speed	[rpm]	*5	6000							
No Load Running Torque	[Nm]	*6	1.30							
Permitted Radial Load	[N]	*7	1300	1500	1600	1700	1800	1900	1900	2000
Permitted Axial Load	[N]	*8	1500	1700	1900	2000	2100	2300	2400	2500
Maximum Radial Load	[N]	*9	4300							
Maximum Axial Load	[N]	*10	3900							
Moment of Inertia (≤Ø 14)	[kgcm2]	--	--	--	--	--	--	--	--	--
Moment of Inertia (≤ Ø 19)	[kgcm2]	--	3.300	2.000	1.600	1.300	1.100	1.000	0.980	0.950
Moment of Inertia (≤ Ø 28)	[kgcm2]	--	5.300	4.100	3.600	3.300	3.200	3.100	3.000	3.000
Moment of Inertia (≤ Ø 38)	[kgcm2]	--	13.000	12.000	11.000	11.000	11.000	11.000	11.000	11.000
Efficiency	[%]	*11	95							
Torsional Rigidity	[Nm/arc-min]	*12	31							
Maximum Torsional Backlash	[arc-min]	--	≤ 3							
Noise Level	[dB]	*13	71							
Protection Class	--	*14	IP54 (IP65)							
Ambient Temperature	[°C]	--	0-40							
Permitted Housing Temperature	[°C]	--	90							
Weight	[kg]	*15	8							

VRB-115 – 2-Stage Specifications

Frame Size	**115**									
Stage	**2-Stage**									
Ratio	Unit	Note	15	16	20	25	28	30	35	40
Nominal Output Torque	[Nm]	*1	120	180	180	180	180	120	180	180
Maximum Acceleration Torque	[Nm]	*2	225	330	330	330	330	225	330	330
Emergency Stop Torque	[Nm]	*3	500	625	625	625	625	500	625	625
Nominal Input Speed	[rpm]	*4	3000							
Maximum Input Speed	[rpm]	*5	6000							
No Load Running Torque	[Nm]	*6	0.42							
Permitted Radial Load	[N]	*7	2300	2300	2500	2700	2800	2900	3000	3200
Permitted Axial Load	[N]	*8	3000	3100	3400	3700	3900	3900	3900	3900
Maximum Radial Load	[N]	*9	4300							
Maximum Axial Load	[N]	*10	3900							
Moment of Inertia (≤Ø 14)	[kgcm2]	--	0.430	0.480	0.400	0.380	0.440	0.290	0.370	0.280
Moment of Inertia (≤ Ø 19)	[kgcm2]	--	0.860	0.920	0.830	0.820	0.880	0.740	0.810	0.730
Moment of Inertia (≤ Ø 28)	[kgcm2]	--	2.800	2.900	2.800	2.800	2.800	2.700	2.700	2.700
Moment of Inertia (≤ Ø 38)	[kgcm2]	--	--	--	--	--	--	--	--	--
Efficiency	[%]	*11	90							
Torsional Rigidity	[Nm/arc-min]	*12	31							
Maximum Torsional Backlash	[arc-min]	--	≤ 3							
Noise Level	[dB]	*13	71							
Protection Class	--	*14	IP54 (IP65)							
Ambient Temperature	[°C]	--	0-40							
Permitted Housing Temperature	[°C]	--	90							
Weight	[kg]	*15	8.9							

VRB-115 – 2-Stage Specifications

Frame Size	115								
Stage	**2-Stage**								
Ratio	Unit	Note	45	50	60	70	80	90	100
Nominal Output Torque	[Nm]	*1	120	180	180	180	180	120	120
Maximum Acceleration Torque	[Nm]	*2	225	330	330	330	330	225	225
Emergency Stop Torque	[Nm]	*3	500	625	625	625	625	500	500
Nominal Input Speed	[rpm]	*4	3000						
Maximum Input Speed	[rpm]	*5	6000						
No Load Running Torque	[Nm]	*6	0.42						
Permitted Radial Load	[N]	*7	3300	3400	3600	3800	4000	4200	4300
Permitted Axial Load	[N]	*8	3900	3900	3900	3900	3900	3900	3900
Maximum Radial Load	[N]	*9	4300						
Maximum Axial Load	[N]	*10	3900						
Moment of Inertia (≤Ø 14)	[kgcm2]	--	0.370	0.280	0.280	0.280	0.280	0.270	0.270
Moment of Inertia (≤ Ø 19)	[kgcm2]	--	0.800	0.730	0.730	0.730	0.730	0.730	0.730
Moment of Inertia (≤ Ø 28)	[kgcm2]	--	2.700	2.700	2.700	2.700	2.700	2.700	2.700
Moment of Inertia (≤ Ø 38)	[kgcm2]	--	--	--	--	--	--	--	--
Efficiency	[%]	*11	90						
Torsional Rigidity	[Nm/arc-min]	*12	31						
Maximum Torsional Backlash	[arc-min]	--	≤ 3						
Noise Level	[dB]	*13	71						
Protection Class	--	*14	IP54 (IP65)						
Ambient Temperature	[°C]	--	0-40						
Permitted Housing Temperature	[°C]	--	90						
Weight	[kg]	*15	8.9						

*1) At nominal input speed, service life is 20,000 hours
*2) The maximum torque when starting or stopping operation
*3) The maximum torque allowed under a stress situation (Permitted 1,000 times during service life)
*4) The average input speed
*5) The maximum intermittent input speed
*6) This is the torque at no load applied on the input shaft. The input speed is 3,000 rpm for VRB 115
*7) At this load and nominal input speed, service life will be 20,000 hours. (The radial load applied to the output side bearing)
*8) At this load and nominal input speed, service life will be 20,000 hours. (The axial load applied to the output shaft center)
*9) The maximum radial load that the reducer can accept
*10) The maximum axial load that the reducer can accept
*11) The efficiency at the nominal torque rating
*12) This does not include the lost motion
*13) Contact NIDEC-SHIMPO for the testing conditions and environment
*14) IP65 (wash-down) is available as an option. Contact NIDEC-SHIMPO for more details and our food grade options
*15) The weight may vary slightly between models

VRB-115 – 1-Stage Dimensions

Input shaft bore ≦φ19

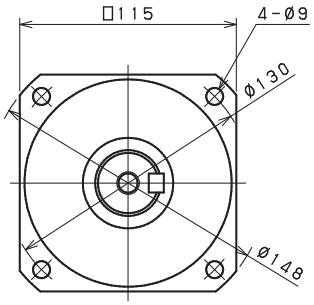

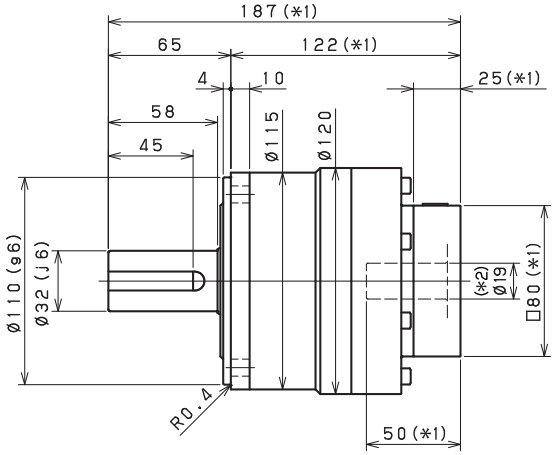

Input shaft bore ≦φ28

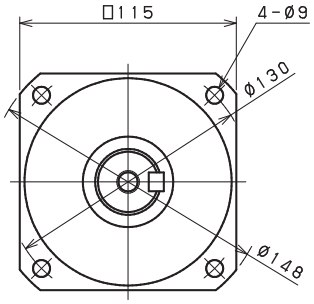

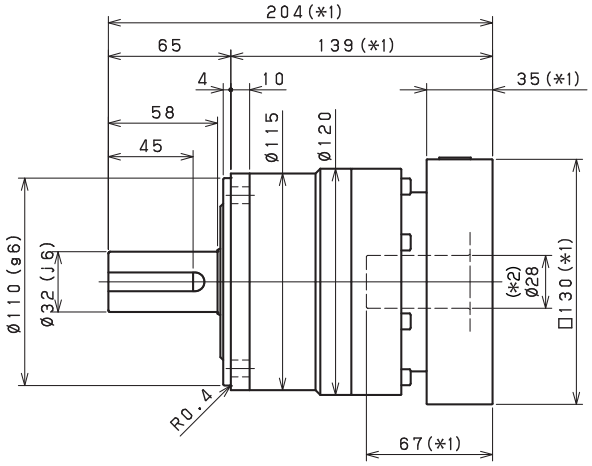

Input shaft bore ≦φ38

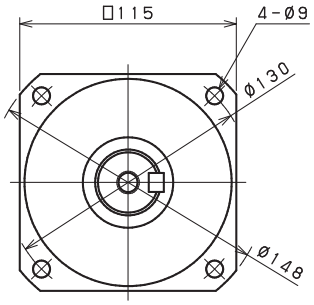

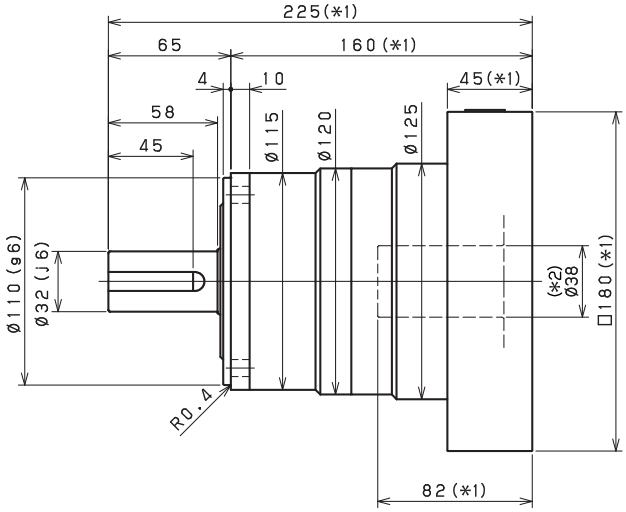

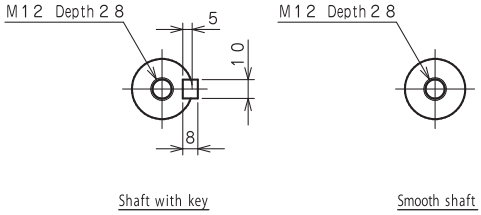

*1) Length will vary depending on motor

*2) Bushing will be inserted to adapt to motor shaft

VRB-115 – 2-Stage Dimensions

Input shaft bore ≦φ14

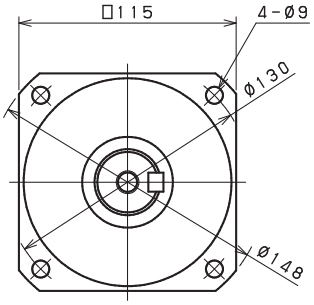

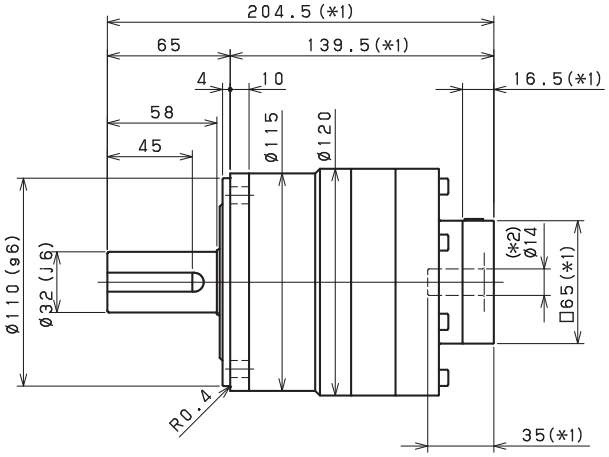

Input shaft bore ≦φ19

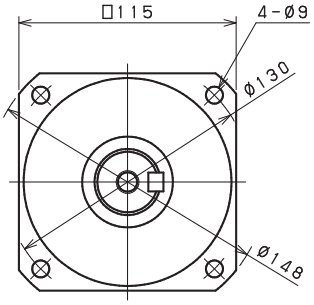

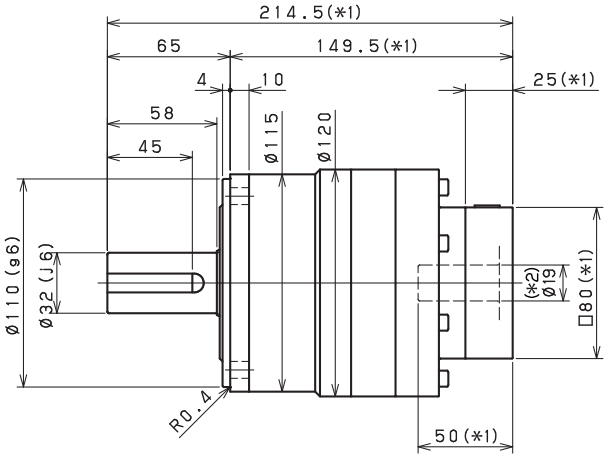

Input shaft bore ≦φ28

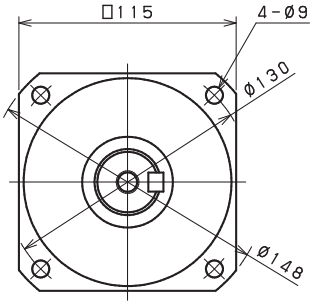

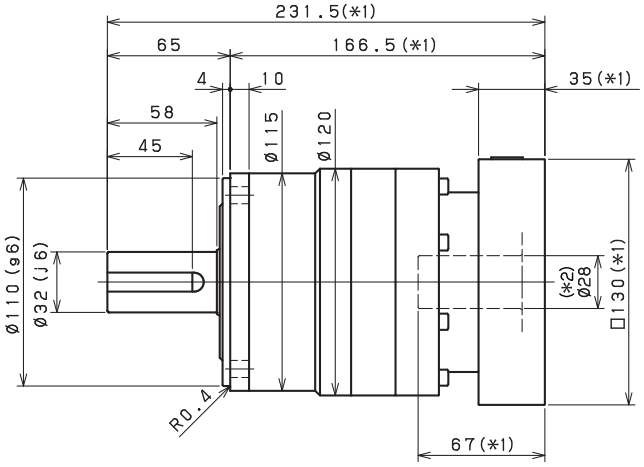

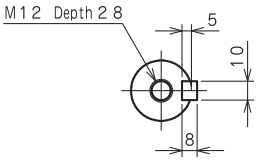

Shaft with key

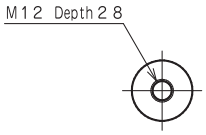

Smooth shaft

*1) Length will vary depending on motor

*2) Bushing will be inserted to adapt to motor shaft

VRB-115 – 1-Stage Adapter Dimensions

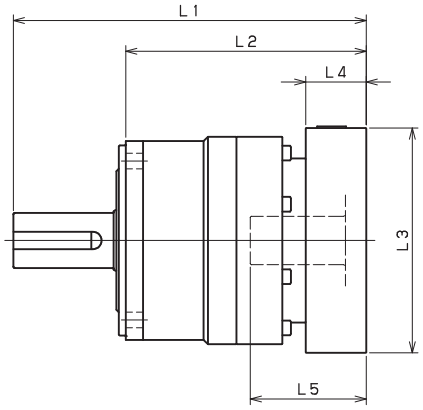

Model number	**: Adapter code	1-Stage					
		L1	L*	L2	L3	L4	L5
VRB-115-□-□-14** (Input shaft bore ≦ φ14)	BA•BB•BD•BE•BF•BG•BH•BJ•BK•BP	--	--	--	--	--	--
	BC•BH•BM•BN	--	--	--	--	--	--
	CA•CC	--	--	--	--	--	--
	DA•DB•DC•DD•DF•DH•DJ	--	--	--	--	--	--
	EA•EB•EC•EF•EG•EK•EL	--	--	--	--	--	--
	FA	--	--	--	--	--	--
	FB	--	--	--	--	--	--
	JA	--	--	--	--	--	--
VRB-115-□-□-19** (Input shaft bore ≦ φ19)	DA•DB•DC	187	162	122	□80	25	50
	EB•ED	187	162	122	□90	25	50
	FA	187	162	122	□100	25	50
	FB	197	162	132	□100	35	60
	GB•GD•GJ	187	162	122	□115	25	50
	HA	187	162	122	□130	25	50
	HB	202	162	137	□130	40	65
	JA	197	162	132	□150	35	60
VRB-115-□-□-28** (Input shaft bore ≦ φ28)	FA•FB•FC	204	169	139	□100	35	67
	FD•FE	199	169	134	□100	30	62
	GA•GB•GC•GD•GE•GF•GG•GH	204	169	139	□115	35	67
	HA•HC•HD	204	169	139	□130	35	67
	HB	214	169	149	□130	45	77
	HE	219	169	154	□130	50	82
	HF	199	169	134	□130	30	62
	JA•JB•JC•JF	204	169	139	□150	35	67
	JD	224	169	159	□150	55	87
	JE	214	169	149	□150	45	77
	KA•KB•KE	204	169	139	□180	35	67
	KD	214	169	149	□180	45	77
VRB-115-□-□-38** (Input shaft bore ≦ φ38)	HA	225	180	160	□130	45	82
	HB•HE	220	180	155	□130	40	77
	JA	225	180	160	□150	45	82
	KA•KB•KC	225	180	160	□180	45	82
	KD	260	180	195	□180	80	117
	KE	240	180	175	□180	60	97

*1) Single reduction : 1/3~ 1/10 *2) Bushing will be inserted to adapt to motor shaft

For an explanation on the Adapter Flange Code, please turn to page 422.

A more comprehensive adapter flange offering can be found using the NIDEC-SHIMPO Online Selector Tool. The variety is constantly expanding and being updated on the Selector Tool. If you have any questions or need any support, contact NIDEC-SHIMPO.

VRB-115 – 2-Stage Adapter Dimensions

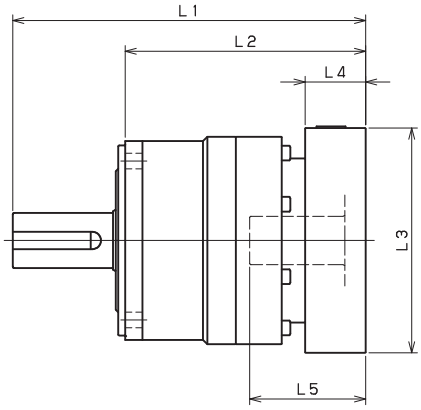

Model number	**: Adapter code	2-Stage					
		L1	L*	L2	L3	L4	L5
VRB-115-□-□-14** (Input shaft bore ≦ φ14)	BA•BB•BD•BE•BF•BG•BH•BJ•BK•BP	204.5	188	139.5	□65	16.5	35
	BC•BH•BM•BN	209.5	188	144.5	□65	21.5	40
	CA•CC	204.5	188	139.5	□70	16.5	35
	DA•DB•DC•DD•DF•DH•DJ	204.5	188	139.5	□80	16.5	35
	EA•EB•EC•EF•EG•EK•EL	204.5	188	139.5	□90	16.5	35
	FA	204.5	188	139.5	□100	16.5	35
	FB	214.5	188	149.5	□100	26.5	45
	JA	219.5	188	154.5	□150	31.5	50
VRB-115-□-□-19** (Input shaft bore ≦ φ19)	DA•DB•DC	214.5	189.5	149.5	□80	25	50
	EB•ED	214.5	189.5	149.5	□90	25	50
	FA	214.5	189.5	149.5	□100	25	50
	FB	224.5	189.5	159.5	□100	35	60
	GB•GD•GJ	214.5	189.5	149.5	□115	25	50
	HA	214.5	189.5	149.5	□130	25	50
	HB	229.5	189.5	164.5	□130	40	65
	JA	224.5	189.5	159.5	□150	35	60
VRB-115-□-□-28** (Input shaft bore ≦ φ28)	FA•FB•FC	231.5	196.5	166.5	□100	35	67
	FD•FE	226.5	196.5	161.5	□100	30	62
	GA•GB•GC•GD•GE•GF•GG•GH	231.5	196.5	166.5	□115	35	67
	HA•HC•HD	231.5	196.5	166.5	□130	35	67
	HB	241.5	196.5	176.5	□130	45	77
	HE	246.5	196.5	181.5	□130	50	82
	HF	226.5	196.5	161.5	□130	30	62
	JA•JB•JC•JF	231.5	196.5	166.5	□150	35	67
	JD	251.5	196.5	186.5	□150	55	87
	JE	241.5	196.5	176.5	□150	45	77
	KA•KB•KE	231.5	196.5	166.5	□180	35	67
	KD	241.5	196.5	176.5	□180	45	77
VRB-115-□-□-38** (Input shaft bore ≦ φ38)	HA	249	204	184	□130	45	82
	HB•HE	244	204	179	□130	40	77
	JA	249	204	184	□150	45	82
	KA•KB•KC	249	204	184	□180	45	82
	KD	284	204	219	□180	80	117
	KE	264	204	199	□180	60	97

*1) Double reduction : 1/15~ 1/100 *2) Bushing will be inserted to adapt to motor shaft

For an explanation on the Adapter Flange Code, please turn to page 422.

A more comprehensive adapter flange offering can be found using the NIDEC-SHIMPO Online Selector Tool. The variety is constantly expanding and being updated on the Selector Tool. If you have any questions or need any support, contact NIDEC-SHIMPO.

VRB-140 – 1-Stage Specifications

Frame Size	**140**									
Stage	**1-Stage**									
Ratio	Unit	Note	3	4	5	6	7	8	9	10
Nominal Output Torque	[Nm]	*1	240	240	360	360	360	360	240	240
Maximum Acceleration Torque	[Nm]	*2	470	700	700	700	700	700	470	470
Emergency Stop Torque	[Nm]	*3	1000	1250	1250	1250	1250	1250	1000	1000
Nominal Input Speed	[rpm]	*4	2000							
Maximum Input Speed	[rpm]	*5	4000							
No Load Running Torque	[Nm]	*6	1.63							
Permitted Radial Load	[N]	*7	3200	3500	3800	4000	4200	4400	4600	4700
Permitted Axial Load	[N]	*8	2400	2700	3000	3300	3500	3700	3900	4100
Maximum Radial Load	[N]	*9	9100							
Maximum Axial Load	[N]	*10	8200							
Moment of Inertia (≤Ø 19)	[kgcm2]	--	--	--	--	--	--	--	--	--
Moment of Inertia (≤ Ø 28)	[kgcm2]	--	12.000	7.500	5.800	4.900	4.100	3.800	3.600	3.500
Moment of Inertia (≤ Ø 38)	[kgcm2]	--	20.000	15.000	14.000	13.000	12.000	12.000	11.000	11.000
Moment of Inertia (≤ Ø 48)	[kgcm2]	--	42.000	37.000	36.000	35.000	34.000	34.000	34.000	34.000
Efficiency	[%]	*11	95							
Torsional Rigidity	[Nm/arc-min]	*12	60							
Maximum Torsional Backlash	[arc-min]	--	≤ 3							
Noise Level	[dB]	*13	67							
Protection Class	--	*14	IP54 (IP65)							
Ambient Temperature	[°C]	--	0-40							
Permitted Housing Temperature	[°C]	--	90							
Weight	[kg]	*15	16							

VRB-140 – 2-Stage Specifications

Frame Size	**140**									
Stage	**2-Stage**									
Ratio	Unit	Note	15	16	20	25	28	30	35	40
Nominal Output Torque	[Nm]	*1	240	360	360	360	360	240	360	360
Maximum Acceleration Torque	[Nm]	*2	470	700	700	700	700	470	700	700
Emergency Stop Torque	[Nm]	*3	1000	1250	1250	1250	1250	1000	1250	1250
Nominal Input Speed	[rpm]	*4	2000							
Maximum Input Speed	[rpm]	*5	4000							
No Load Running Torque	[Nm]	*6	0.56							
Permitted Radial Load	[N]	*7	5400	5500	6000	6400	6700	6800	7200	7500
Permitted Axial Load	[N]	*8	4900	5000	5500	6100	6400	6600	7000	7500
Maximum Radial Load	[N]	*9	9100							
Maximum Axial Load	[N]	*10	8200							
Moment of Inertia (≤Ø 19)	[kgcm2]	--	1.300	1.500	1.200	1.100	1.400	0.850	1.100	0.830
Moment of Inertia (≤ Ø 28)	[kgcm2]	--	3.200	3.500	3.100	3.100	3.300	2.800	3.100	2.800
Moment of Inertia (≤ Ø 38)	[kgcm2]	--	11.000	11.000	11.000	11.000	11.000	10.000	11.000	10.000
Moment of Inertia (≤ Ø 48)	[kgcm2]	--	--	--	--	--	--	--	--	--
Efficiency	[%]	*11	90							
Torsional Rigidity	[Nm/arc-min]	*12	60							
Maximum Torsional Backlash	[arc-min]	--	≤ 3							
Noise Level	[dB]	*13	67							
Protection Class	--	*14	IP54 (IP65)							
Ambient Temperature	[°C]	--	0-40							
Permitted Housing Temperature	[°C]	--	90							
Weight	[kg]	*15	17							

VRB-140 – 2-Stage Specifications

Frame Size	**140**								
Stage	**2-Stage**								
Ratio	Unit	Note	45	50	60	70	80	90	100
Nominal Output Torque	[Nm]	*1	240	360	360	360	360	240	240
Maximum Acceleration Torque	[Nm]	*2	470	700	700	700	700	470	470
Emergency Stop Torque	[Nm]	*3	1000	1250	1250	1250	1250	1000	1000
Nominal Input Speed	[rpm]	*4	2000						
Maximum Input Speed	[rpm]	*5	4000						
No Load Running Torque	[Nm]	*6	0.56						
Permitted Radial Load	[N]	*7	7800	8100	8600	9100	9100	9100	9100
Permitted Axial Load	[N]	*8	7900	8200	8200	8200	8200	8200	8200
Maximum Radial Load	[N]	*9	9100						
Maximum Axial Load	[N]	*10	8200						
Moment of Inertia (≤Ø 19)	[kgcm2]	--	1.100	0.810	0.810	0.800	0.800	0.800	0.800
Moment of Inertia (≤ Ø 28)	[kgcm2]	--	3.000	2.800	2.800	2.800	2.800	2.800	2.800
Moment of Inertia (≤ Ø 38)	[kgcm2]	--	11.000	10.000	10.000	10.000	10.000	10.000	10.000
Moment of Inertia (≤ Ø 48)	[kgcm2]	--	--	--	--	--	--	--	--
Efficiency	[%]	*11	90						
Torsional Rigidity	[Nm/arc-min]	*12	60						
Maximum Torsional Backlash	[arc-min]	--	≤ 3						
Noise Level	[dB]	*13	67						
Protection Class	--	*14	IP54 (IP65)						
Ambient Temperature	[°C]	--	0-40						
Permitted Housing Temperature	[°C]	--	90						
Weight	[kg]	*15	17						

*1) At nominal input speed, service life is 20,000 hours
*2) The maximum torque when starting or stopping operation
*3) The maximum torque allowed under a stress situation (Permitted 1,000 times during service life)
*4) The average input speed
*5) The maximum intermittent input speed
*6) This is the torque at no load applied on the input shaft. The input speed is 2,000 rpm for VRB140
*7) At this load and nominal input speed, service life will be 20,000 hours. (The radial load applied to the output side bearing)
*8) At this load and nominal input speed, service life will be 20,000 hours. (The axial load applied to the output shaft center)
*9) The maximum radial load that the reducer can accept
*10) The maximum axial load that the reducer can accept
*11) The efficiency at the nominal torque rating
*12) This does not include the lost motion
*13) Contact NIDEC-SHIMPO for the testing conditions and environment
*14) IP65 (wash-down) is available as an option. Contact NIDEC-SHIMPO for more details and our food grade options
*15) The weight may vary slightly between models

VRB-140 – 1-Stage Dimensions

Input shaft bore ≦φ28

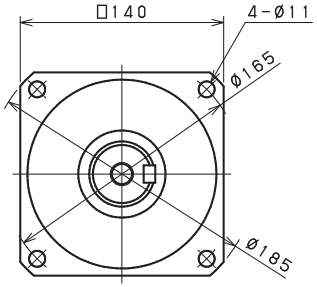

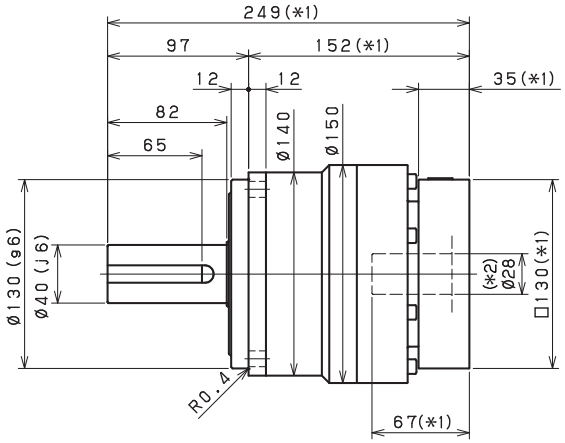

Input shaft bore ≦φ38

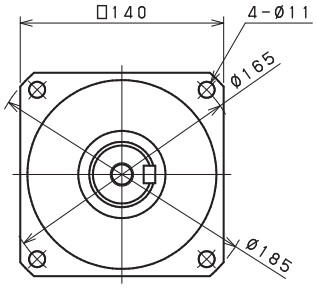

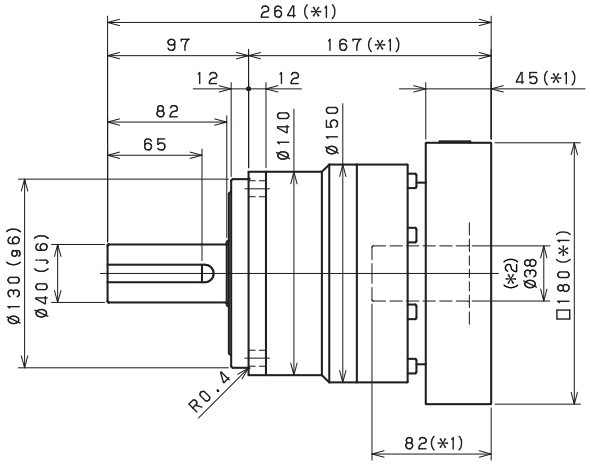

Input shaft bore ≦φ48

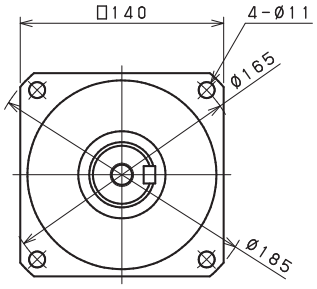

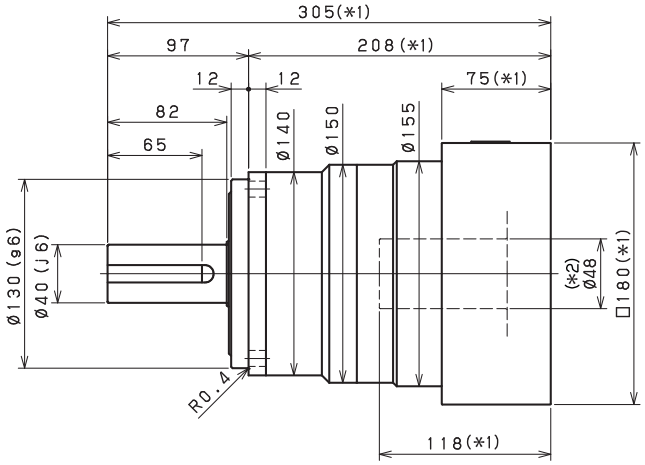

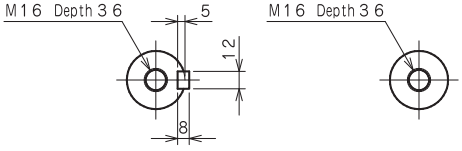

Shaft with key

Smooth shaft

*1) Length will vary depending on motor

*2) Bushing will be inserted to adapt to motor shaft

VRB-140 – 2-Stage Dimensions

Input shaft bore ≦φ19

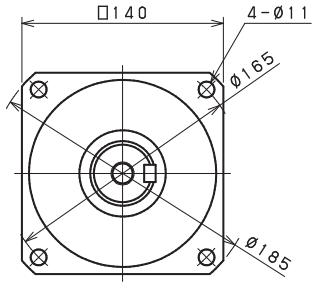

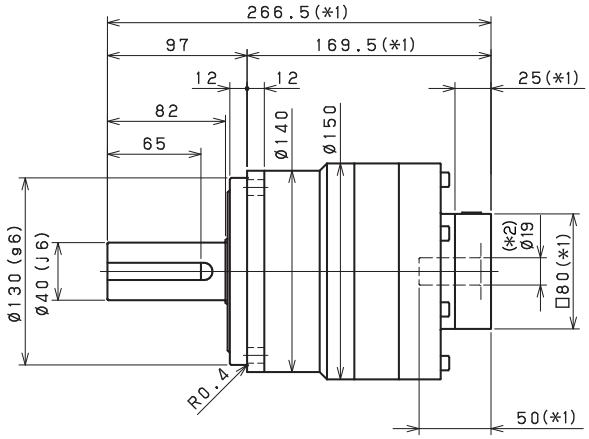

Input shaft bore ≦φ28

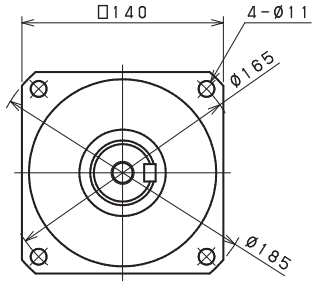

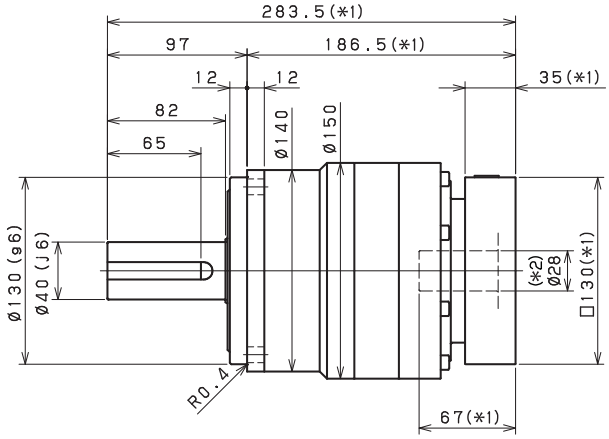

Input shaft bore ≦φ38

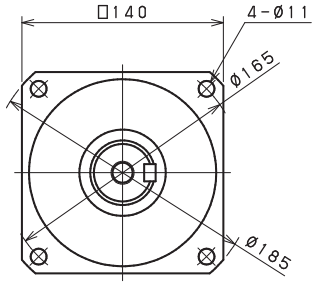

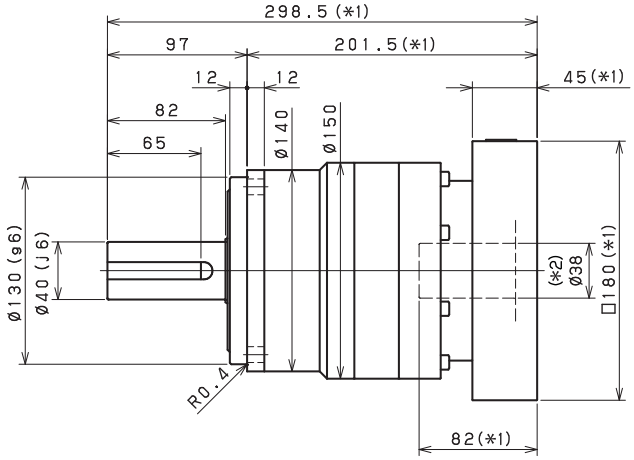

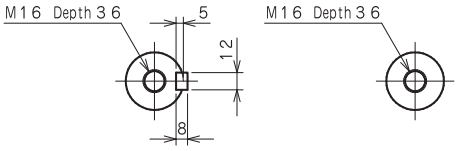

Shaft with key　　Smooth shaft

*1) Length will vary depending on motor

*2) Bushing will be inserted to adapt to motor shaft

VRB-140 – 1-Stage Adapter Dimensions

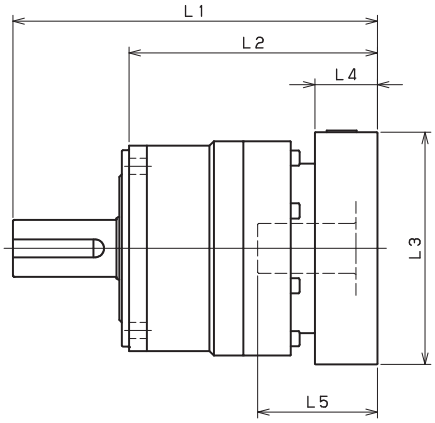

Model number	**: Adapter code	1-Stage					
		L1	L*	L2	L3	L4	L5
VRB-140-□-□-19** (Input shaft bore ≦ φ19)	DA•DB•DC	--	--	--	--	--	--
	EB•ED	--	--	--	--	--	--
	FA	--	--	--	--	--	--
	FB	--	--	--	--	--	--
	GB•GD•GJ	--	--	--	--	--	--
	HA	--	--	--	--	--	--
	HB	--	--	--	--	--	--
	JA	--	--	--	--	--	--
VRB-140-□-□-28** (Input shaft bore ≦ φ28)	FA•FB•FC	249	214	152	□100	35	67
	GA•GB•GC•GD•GE•GF•GG•GH	249	214	152	□115	35	67
	HA•HC•HD	249	214	152	□130	35	67
	HB	259	214	162	□130	45	77
	HF	244	214	147	□130	30	62
	JA•JB•JC•JF	249	214	152	□150	35	67
	KA•KB•KE	249	214	152	□180	35	67
	LA	249	214	152	□200	35	67
	LB	259	214	162	□200	45	77
	MA	249	214	152	□220	35	67
	MB	259	214	162	□220	45	77
VRB-140-□-□-38** (Input shaft bore ≦ φ38)	HA	264	219	167	□130	45	82
	HB•HE	259	219	162	□130	40	77
	JA	264	219	167	□150	45	82
	KA•KB•KC	264	219	167	□180	45	82
	KD	299	219	202	□180	80	117
	KE	279	219	182	□180	60	97
	LB	274	219	177	□200	55	92
	MA•MB	264	219	167	□220	45	82
	MC	279	219	182	□220	60	97
	MD	274	219	177	□220	55	92
VRB-140-□-□-48** (Input shaft bore ≦ φ48)	KA	305	230	208	□180	75	118
	KB•KC	285	230	188	□180	55	98
	LA	285	230	188	□200	55	98
	MA	285	230	188	□220	55	98
	MB	305	230	208	□220	75	118

*1) Single reduction : 1/3~ 1/10 *2) Bushing will be inserted to adapt to motor shaft

For an explanation on the Adapter Flange Code, please turn to page 422.

A more comprehensive adapter flange offering can be found using the NIDEC-SHIMPO Online Selector Tool. The variety is constantly expanding and being updated on the Selector Tool. If you have any questions or need any support, contact NIDEC-SHIMPO.

VRB-140 – 2-Stage Adapter Dimensions

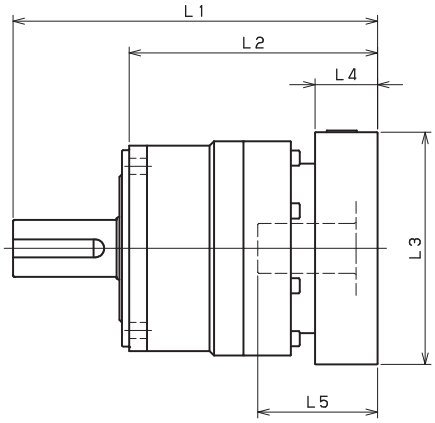

Model number	**: Adapter code	2-Stage					
		L1	L*	L2	L3	L4	L5
VRB-140-□-□-19** (Input shaft bore ≦ φ19)	DA•DB•DC	266.5	241.5	169.5	□80	25	50
	EB•ED	266.5	241.5	169.5	□90	25	50
	FA	266.5	241.5	169.5	□100	25	50
	FB	276.5	241.5	179.5	□100	35	60
	GB•GD•GJ	266.5	241.5	169.5	□115	25	50
	HA	266.5	241.5	169.5	□130	25	50
	HB	281.5	241.5	184.5	□130	40	65
	JA	276.5	241.5	179.5	□150	35	60
VRB-140-□-□-28** (Input shaft bore ≦ φ28)	FA•FB•FC	283.5	248.5	186.5	□100	35	67
	GA•GB•GC•GD•GE•GF•GG•GH	283.5	248.5	186.5	□115	35	67
	HA•HC•HD	283.5	248.5	186.5	□130	35	67
	HB	293.5	248.5	196.5	□130	45	77
	HF	278.5	248.5	181.5	□130	30	62
	JA•JB•JC•JF	283.5	248.5	186.5	□150	35	67
	KA•KB•KE	283.5	248.5	186.5	□180	35	67
	LA	283.5	248.5	186.5	□200	35	67
	LB	293.5	248.5	196.5	□200	45	77
	MA	283.5	248.5	186.5	□220	35	67
	MB	293.5	248.5	196.5	□220	45	77
VRB-140-□-□-38** (Input shaft bore ≦ φ38)	HA	298.5	253.5	201.5	□130	45	82
	HB•HE	293.5	253.5	196.5	□130	40	77
	JA	298.5	253.5	201.5	□150	45	82
	KA•KB•KC	298.5	253.5	201.5	□180	45	82
	KD	333.5	253.5	236.5	□180	80	117
	KE	313.5	253.5	216.5	□180	60	97
	LB	308.5	253.5	211.5	□200	55	92
	MA•MB	298.5	253.5	201.5	□220	45	82
	MC	313.5	253.5	216.5	□220	60	97
	MD	308.5	253.5	211.5	□220	55	92
VRB-140-□-□-48** (Input shaft bore ≦ φ48)	KA	339.5	264.5	242.5	□180	75	118
	KB•KC	319.5	264.5	222.5	□180	55	98
	LA	319.5	264.5	222.5	□200	55	98
	MA	319.5	264.5	222.5	□220	55	98
	MB	339.5	264.5	242.5	□220	75	118

*1) Double reduction : 1/15~ 1/100 *2) Bushing will be inserted to adapt to motor shaft

For an explanation on the Adapter Flange Code, please turn to page 422.

A more comprehensive adapter flange offering can be found using the NIDEC-SHIMPO Online Selector Tool. The variety is constantly expanding and being updated on the Selector Tool. If you have any questions or need any support, contact NIDEC-SHIMPO.

VRB-180 – 1-Stage Specifications

Frame Size	**180**									
Stage	**1-Stage**									
Ratio	Unit	Note	3	4	5	6	7	8	9	10
Nominal Output Torque	[Nm]	*1	500	750	750	750	750	750	500	500
Maximum Acceleration Torque	[Nm]	*2	970	1400	1400	1400	1400	1400	970	970
Emergency Stop Torque	[Nm]	*3	2200	2750	2750	2750	2750	2750	2200	2200
Nominal Input Speed	[rpm]	*4	1500							
Maximum Input Speed	[rpm]	*5	3000							
No Load Running Torque	[Nm]	*6	2.68							
Permitted Radial Load	[N]	*7	5600	6200	6700	7100	7400	7800	8100	8400
Permitted Axial Load	[N]	*8	4300	4900	5400	5800	6300	6600	7000	7300
Maximum Radial Load	[N]	*9	15000							
Maximum Axial Load	[N]	*10	14000							
Moment of Inertia (≤Ø 28)	[kgcm2]	--	--	--	--	--	--	--	--	--
Moment of Inertia (≤ Ø 38)	[kgcm2]	--	44.000	28.000	22.000	18.000	16.000	15.000	14.000	14.000
Moment of Inertia (≤ Ø 48)	[kgcm2]	--	66.000	50.000	44.000	41.000	38.000	37.000	36.000	36.000
Moment of Inertia (≤ Ø 65)	[kgcm2]	--	130.000	110.000	100.000	100.000	99.000	97.000	97.000	96.000
Efficiency	[%]	*11	95							
Torsional Rigidity	[Nm/arc-min]	*12	175							
Maximum Torsional Backlash	[arc-min]	--	≤ 3							
Noise Level	[dB]	*13	67							
Protection Class	--	*14	IP54 (IP65)							
Ambient Temperature	[°C]	--	0-40							
Permitted Housing Temperature	[°C]	--	90							
Weight	[kg]	*15	36							

VRB-180 – 2-Stage Specifications

Frame Size	**180**									
Stage	**2-Stage**									
Ratio	Unit	Note	15	16	20	25	28	30	35	40
Nominal Output Torque	[Nm]	*1	500	750	750	750	750	500	750	750
Maximum Acceleration Torque	[Nm]	*2	970	1400	1400	1400	1400	970	1400	1400
Emergency Stop Torque	[Nm]	*3	2200	2750	2750	2750	2750	2200	2750	2750
Nominal Input Speed	[rpm]	*4	1500							
Maximum Input Speed	[rpm]	*5	3000							
No Load Running Torque	[Nm]	*6	1.39							
Permitted Radial Load	[N]	*7	9600	9800	11000	11000	12000	12000	13000	13000
Permitted Axial Load	[N]	*8	8700	8900	9900	11000	11000	12000	13000	13000
Maximum Radial Load	[N]	*9	15000							
Maximum Axial Load	[N]	*10	14000							
Moment of Inertia (≤Ø 28)	[kgcm2]	--	4.700	5.400	4.400	4.200	4.900	3.200	4.100	3.200
Moment of Inertia (≤ Ø 38)	[kgcm2]	--	12.000	13.000	12.000	12.000	13.000	11.000	12.000	11.000
Moment of Inertia (≤ Ø 48)	[kgcm2]	--	34.000	35.000	34.000	34.000	35.000	33.000	34.000	33.000
Moment of Inertia (≤ Ø 65)	[kgcm2]	--	--	--	--	--	--	--	--	--
Efficiency	[%]	*11	90							
Torsional Rigidity	[Nm/arc-min]	*12	175							
Maximum Torsional Backlash	[arc-min]	--	≤ 3							
Noise Level	[dB]	*13	67							
Protection Class	--	*14	IP54 (IP65)							
Ambient Temperature	[°C]	--	0-40							
Permitted Housing Temperature	[°C]	--	90							
Weight	[kg]	*15	37							

VRB-180 – 2-Stage Specifications

Frame Size	180								
Stage	**2-Stage**								
Ratio	Unit	Note	45	50	60	70	80	90	100
Nominal Output Torque	[Nm]	*1	500	750	750	750	750	500	500
Maximum Acceleration Torque	[Nm]	*2	970	1400	1400	1400	1400	970	970
Emergency Stop Torque	[Nm]	*3	2200	2750	2750	2750	2750	2200	2200
Nominal Input Speed	[rpm]	*4	1500						
Maximum Input Speed	[rpm]	*5	3000						
No Load Running Torque	[Nm]	*6	1.39						
Permitted Radial Load	[N]	*7	14000	14000	15000	15000	15000	15000	15000
Permitted Axial Load	[N]	*8	14000	14000	14000	14000	14000	14000	14000
Maximum Radial Load	[N]	*9	15000						
Maximum Axial Load	[N]	*10	14000						
Moment of Inertia (≤Ø 28)	[kgcm2]	--	4.000	3.100	3.100	3.100	3.100	3.100	3.100
Moment of Inertia (≤ Ø 38)	[kgcm2]	--	12.000	11.000	11.000	11.000	11.000	11.000	11.000
Moment of Inertia (≤ Ø 48)	[kgcm2]	--	34.000	33.000	33.000	33.000	33.000	33.000	33.000
Moment of Inertia (≤ Ø 65)	[kgcm2]	--	--	--	--	--	--	--	--
Efficiency	[%]	*11	90						
Torsional Rigidity	[Nm/arc-min]	*12	175						
Maximum Torsional Backlash	[arc-min]	--	≤ 3						
Noise Level	[dB]	*13	67						
Protection Class	--	*14	IP54 (IP65)						
Ambient Temperature	[°C]	--	0-40						
Permitted Housing Temperature	[°C]	--	90						
Weight	[kg]	*15	37						

*1) At nominal input speed, service life is 20,000 hours
*2) The maximum torque when starting or stopping operation
*3) The maximum torque allowed under a stress situation (Permitted 1,000 times during service life)
*4) The average input speed
*5) The maximum intermittent input speed
*6) This is the torque at no load applied on the input shaft. The input speed is 1,500 rpm for VRB180
*7) At this load and nominal input speed, service life will be 20,000 hours. (The radial load applied to the output side bearing)
*8) At this load and nominal input speed, service life will be 20,000 hours. (The axial load applied to the output shaft center)
*9) The maximum radial load that the reducer can accept
*10) The maximum axial load that the reducer can accept
*11) The efficiency at the nominal torque rating
*12) This does not include the lost motion
*13) Contact NIDEC-SHIMPO for the testing conditions and environment
*14) IP65 (wash-down) is available as an option. Contact NIDEC-SHIMPO for more details and our food grade options
*15) The weight may vary slightly between models

VRB-180 – 1-Stage Dimensions

Input shaft bore ≦φ38

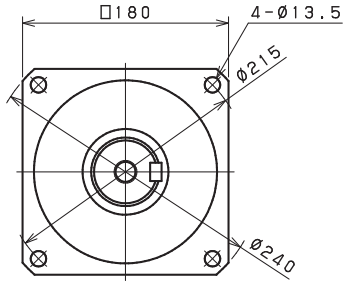

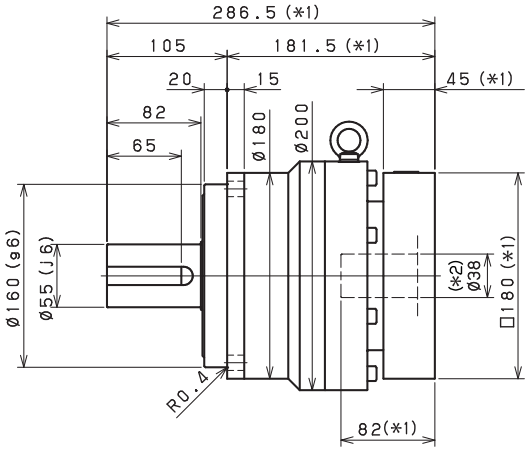

Input shaft bore ≦φ48

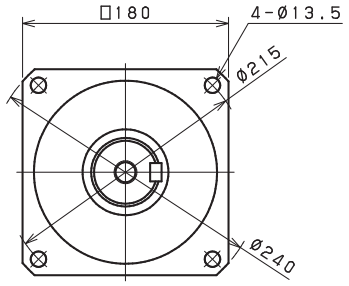

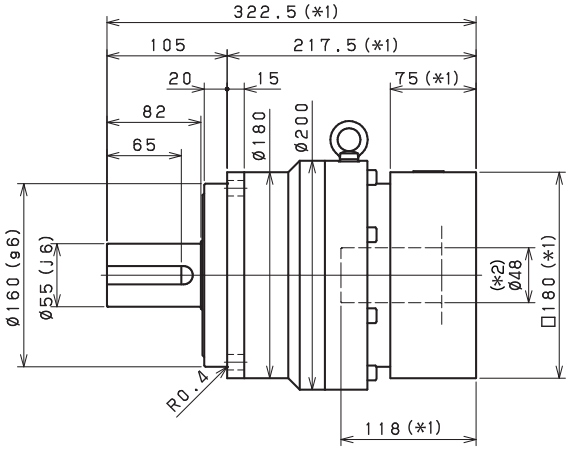

Input shaft bore ≦φ65

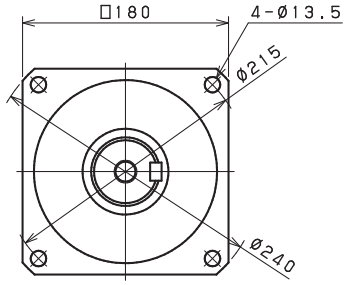

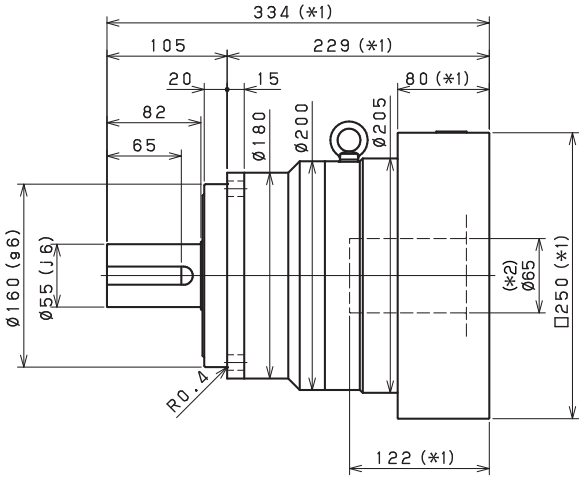

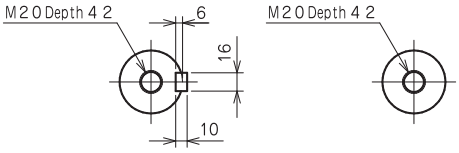

Shaft with key　　Smooth shaft

*1) Length will vary depending on motor

*2) Bushing will be inserted to adapt to motor shaft

VRB-180 – 2-Stage Dimensions

Input shaft bore ≦φ28

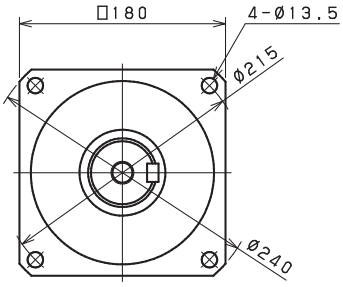

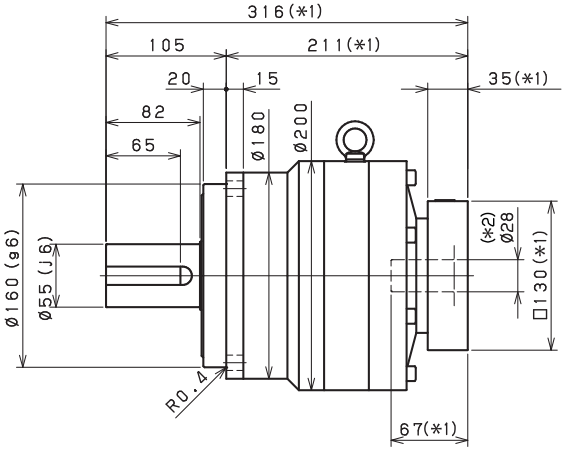

Input shaft bore ≦φ38

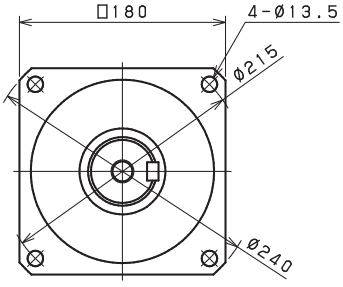

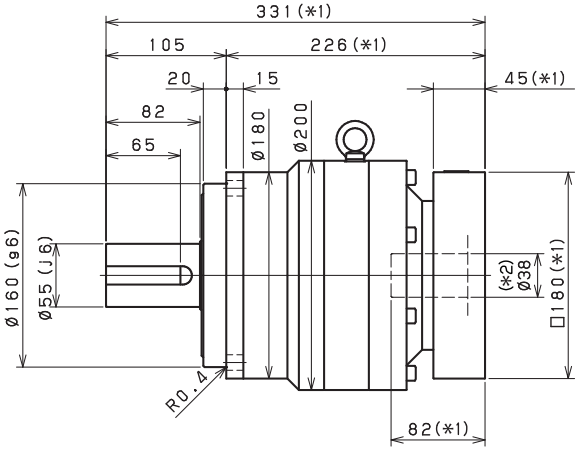

Input shaft bore ≦φ48

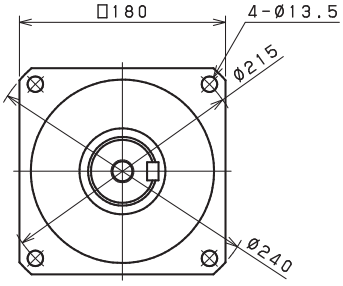

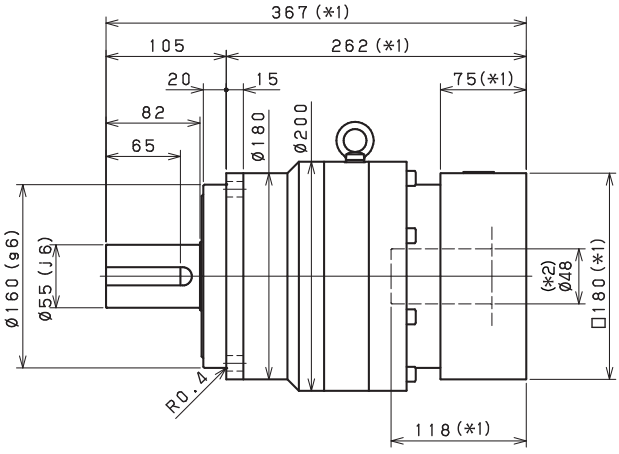

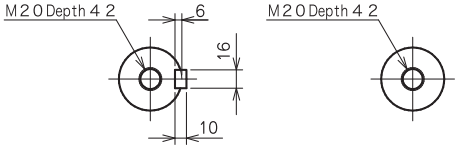

Shaft with key

Smooth shaft

*1) Length will vary depending on motor

*2) Bushing will be inserted to adapt to motor shaft

VRB-180 – 1-Stage Adapter Dimensions

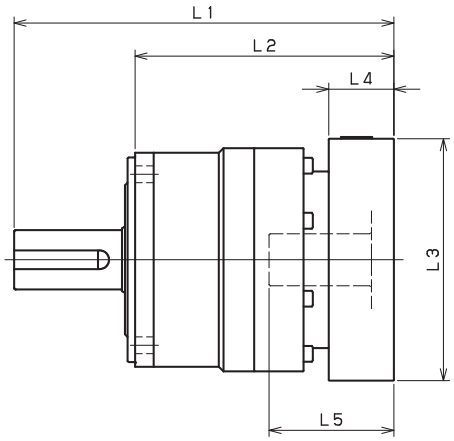

Model number	**: Adapter code	1-Stage					
		L1	L*	L2	L3	L4	L5
VRB-180-□-□-28** (Input shaft bore ≦ φ28)	FA•FB•FC	--	--	--	--	--	--
	GA•GB•GC•GD•GE•GF•GG•GH	--	--	--	--	--	--
	HA•HC•HD	--	--	--	--	--	--
	HB	--	--	--	--	--	--
	HF	--	--	--	--	--	--
	JA•JB•JC•JF	--	--	--	--	--	--
	KA•KB•KE	--	--	--	--	--	--
	LA	--	--	--	--	--	--
	LB	--	--	--	--	--	--
	MA	--	--	--	--	--	--
	MB	--	--	--	--	--	--
VRB-180-□-□-38** (Input shaft bore ≦ φ38)	HA	286.5	241.5	181.5	□130	45	82
	HB•HE	281.5	241.5	176.5	□130	40	77
	JA	286.5	241.5	181.5	□150	45	82
	KA•KB•KC	286.5	241.5	181.5	□180	45	82
	KD	321.5	241.5	216.5	□180	80	117
	KE	301.5	241.5	196.5	□180	60	97
	MA•MB	286.5	241.5	181.5	□220	45	82
	MC	301.5	241.5	196.5	□220	60	97
	MD	296.5	241.5	191.5	□220	55	92
	NA	286.5	241.5	181.5	□250	45	82
VRB-180-□-□-48** (Input shaft bore ≦ φ48)	KA	322.5	247.5	217.5	□180	75	118
	KB•KC	302.5	247.5	197.5	□180	55	98
	LA	302.5	247.5	197.5	□200	55	98
	MA	302.5	247.5	197.5	□220	55	98
	MB	322.5	247.5	217.5	□220	75	118
	NA	322.5	247.5	217.5	□250	75	118
	PA	322.5	247.5	217.5	□280	75	118
VRB-180-□-□-65** (Input shaft bore ≦ φ65)	MA•MB•MC•MD	334	254	229	□220	80	122
	NA•NC	334	254	229	□250	80	122
	NB•ND	364	254	259	□250	110	152
	PA	354	254	249	□280	100	142
	PB	364	254	259	□280	110	152

*1) Single reduction : 1/3~ 1/10 *2) Bushing will be inserted to adapt to motor shaft

For an explanation on the Adapter Flange Code, please turn to page 422.

A more comprehensive adapter flange offering can be found using the NIDEC-SHIMPO Online Selector Tool. The variety is constantly expanding and being updated on the Selector Tool. If you have any questions or need any support, contact NIDEC-SHIMPO.

VRB-180 – 2-Stage Adapter Dimensions

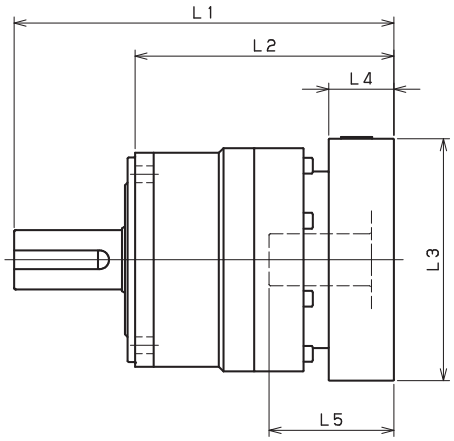

Model number	**: Adapter code	2-Stage					
		L1	L*	L2	L3	L4	L5
VRB-180-□-□-28** (Input shaft bore ≦ φ28)	FA•FB•FC	316	281	211	□100	35	67
	GA•GB•GC•GD•GE•GF•GG•GH	316	281	211	□115	35	67
	HA•HC•HD	316	281	211	□130	35	67
	HB	326	281	221	□130	45	77
	HF	311	281	206	□130	30	62
	JA•JB•JC•JF	316	281	211	□150	35	67
	KA•KB•KE	316	281	211	□180	35	67
	LA	316	281	211	□200	35	67
	LB	326	281	221	□200	45	77
	MA	316	281	211	□220	35	67
	MB	326	281	221	□220	45	77
VRB-180-□-□-38** (Input shaft bore ≦ φ38)	HA	331	286	226	□130	45	82
	HB•HE	326	286	221	□130	40	77
	JA	331	286	226	□150	45	82
	KA•KB•KC	331	286	226	□180	45	82
	KD	366	286	261	□180	80	117
	KE	346	286	241	□180	60	97
	MA•MB	331	286	226	□220	45	82
	MC	346	286	241	□220	60	97
	MD	341	286	236	□220	55	92
	NA	331	286	226	□250	45	82
VRB-180-□-□-48** (Input shaft bore ≦ φ48)	KA	367	292	262	□180	75	118
	KB•KC	347	292	242	□180	55	98
	LA	347	292	242	□200	55	98
	MA	347	292	242	□220	55	98
	MB	367	292	262	□220	75	118
	NA	367	292	262	□250	75	118
	PA	367	292	262	□280	75	118
VRB-180-□-□-65** (Input shaft bore ≦ φ65)	MA•MB•MC•MD	--	--	--	--	--	--
	NA•NC	--	--	--	--	--	--
	NB•ND	--	--	--	--	--	--
	PA	--	--	--	--	--	--
	PB	--	--	--	--	--	--

*1) Double reduction : 1/15~ 1/100 *2) Bushing will be inserted to adapt to motor shaft

For an explanation on the Adapter Flange Code, please turn to page 422.

A more comprehensive adapter flange offering can be found using the NIDEC-SHIMPO Online Selector Tool. The variety is constantly expanding and being updated on the Selector Tool. If you have any questions or need any support, contact NIDEC-SHIMPO.

VRB-220 – 1-Stage Specifications

Frame Size	220									
Stage	1-Stage									
Ratio	Unit	Note	3	4	5	6	7	8	9	10
Nominal Output Torque	[Nm]	*1	1000	1500	1500	1500	1500	1500	1000	1000
Maximum Acceleration Torque	[Nm]	*2	1600	2300	2300	2300	2300	2200	1900	1600
Emergency Stop Torque	[Nm]	*3	4000	5000	5000	5000	5000	5000	4000	4000
Nominal Input Speed	[rpm]	*4	1000							
Maximum Input Speed	[rpm]	*5	2000							
No Load Running Torque	[Nm]	*6	2.92							
Permitted Radial Load	[N]	*7	5800	6400	6900	7300	7700	8000	8400	8700
Permitted Axial Load	[N]	*8	6400	7200	7900	8600	9200	9700	10000	11000
Maximum Radial Load	[N]	*9	15000							
Maximum Axial Load	[N]	*10	14000							
Moment of Inertia (≤ Ø 38)	[kgcm2]	--	--	--	--	--	--	--	--	--
Moment of Inertia (≤ Ø 48)	[kgcm2]	--	90.000	62.000	52.000	47.000	42.000	40.000	39.000	38.000
Moment of Inertia (≤ Ø 65)	[kgcm2]	--	150.000	120.000	110.000	110.000	100.000	100.000	99.000	98.000
Efficiency	[%]	*11	97							
Torsional Rigidity	[Nm/arc-min]	*12	400							
Maximum Torsional Backlash	[arc-min]	--	≤ 3							
Noise Level	[dB]	*13	61							
Protection Class	--	*14	IP54 (IP65)							
Ambient Temperature	[°C]	--	0-40							
Permitted Housing Temperature	[°C]	--	90							
Weight	[kg]	*15	53							

VRB-220 – 2-Stage Specifications

Frame Size	220									
Stage	2-Stage									
Ratio	Unit	Note	15	16	20	25	28	30	35	40
Nominal Output Torque	[Nm]	*1	1000	1500	1500	1500	1500	1000	1500	1500
Maximum Acceleration Torque	[Nm]	*2	1600	2300	2300	2300	2300	1600	2300	2300
Emergency Stop Torque	[Nm]	*3	4000	5000	5000	5000	5000	4000	5000	5000
Nominal Input Speed	[rpm]	*4	1000							
Maximum Input Speed	[rpm]	*5	2000							
No Load Running Torque	[Nm]	*6	1.14							
Permitted Radial Load	[N]	*7	9900	10000	11000	12000	12000	13000	13000	14000
Permitted Axial Load	[N]	*8	13000	13000	14000	14000	14000	14000	14000	14000
Maximum Radial Load	[N]	*9	15000							
Maximum Axial Load	[N]	*10	14000							
Moment of Inertia (≤ Ø 38)	[kgcm2]	--	14.000	16.000	14.000	14.000	15.000	12.000	13.000	12.000
Moment of Inertia (≤ Ø 48)	[kgcm2]	--	36.000	37.000	35.000	35.000	36.000	34.000	35.000	33.000
Moment of Inertia (≤ Ø 65)	[kgcm2]	--	--	--	--	--	--	--	--	--
Efficiency	[%]	*11	92							
Torsional Rigidity	[Nm/arc-min]	*12	400							
Maximum Torsional Backlash	[arc-min]	--	≤ 3							
Noise Level	[dB]	*13	61							
Protection Class	--	*14	IP54 (IP65)							
Ambient Temperature	[°C]	--	0-40							
Permitted Housing Temperature	[°C]	--	90							
Weight	[kg]	*15	54							

VRB-220 – 2-Stage Specifications

Frame Size	**220**								
Stage	**2-Stage**								
Ratio	Unit	Note	45	50	60	70	80	90	100
Nominal Output Torque	[Nm]	*1	1000	1500	1500	1500	1500	1000	1000
Maximum Acceleration Torque	[Nm]	*2	1300	2300	2300	2300	1800	1300	1200
Emergency Stop Torque	[Nm]	*3	4000	5000	5000	5000	5000	4000	4000
Nominal Input Speed	[rpm]	*4	1000						
Maximum Input Speed	[rpm]	*5	2000						
No Load Running Torque	[Nm]	*6	1.14						
Permitted Radial Load	[N]	*7	14000	15000	15000	15000	15000	15000	15000
Permitted Axial Load	[N]	*8	14000	14000	14000	14000	14000	14000	14000
Maximum Radial Load	[N]	*9	15000						
Maximum Axial Load	[N]	*10	14000						
Moment of Inertia (≤ Ø 38)	[kgcm2]	--	13.000	12.000	12.000	12.000	12.000	12.000	12.000
Moment of Inertia (≤ Ø 48)	[kgcm2]	--	35.000	33.000	33.000	33.000	33.000	33.000	33.000
Moment of Inertia (≤ Ø 65)	[kgcm2]	--	--	--	--	--	--	--	--
Efficiency	[%]	*11	92						
Torsional Rigidity	[Nm/arc-min]	*12	400						
Maximum Torsional Backlash	[arc-min]	--	≤ 3						
Noise Level	[dB]	*13	61						
Protection Class	--	*14	IP54 (IP65)						
Ambient Temperature	[°C]	--	0-40						
Permitted Housing Temperature	[°C]	--	90						
Weight	[kg]	*15	54						

*1) At nominal input speed, service life is 20,000 hours
*2) The maximum torque when starting or stopping operation
*3) The maximum torque allowed under a stress situation (Permitted 1,000 times during service life)
*4) The average input speed
*5) The maximum intermittent input speed
*6) This is the torque at no load applied on the input shaft. The input speed is 1,000 rpm for VRB220
*7) At this load and nominal input speed, service life will be 20,000 hours. (The radial load applied to the output side bearing)
*8) At this load and nominal input speed, service life will be 20,000 hours. (The axial load applied to the output shaft center)
*9) The maximum radial load that the reducer can accept
*10) The maximum axial load that the reducer can accept
*11) The efficiency at the nominal torque rating
*12) This does not include the lost motion
*13) Contact NIDEC-SHIMPO for the testing conditions and environment
*14) IP65 (wash-down) is available as an option. Contact NIDEC-SHIMPO for more details and our food grade options
*15) The weight may vary slightly between models

VRB-220 – 1-Stage Dimensions

Input shaft bore ≦φ48

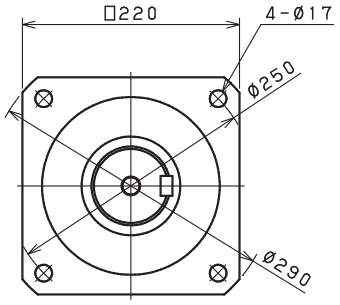

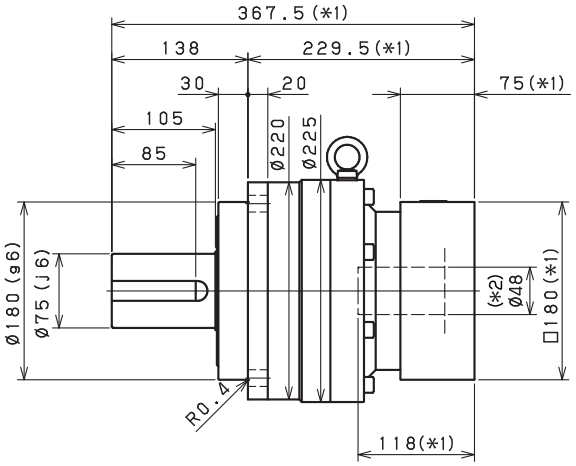

Input shaft bore ≦φ65

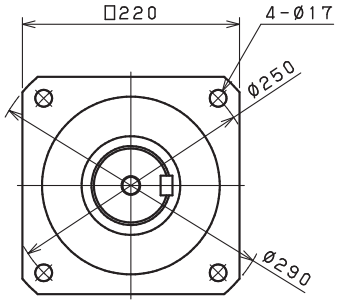

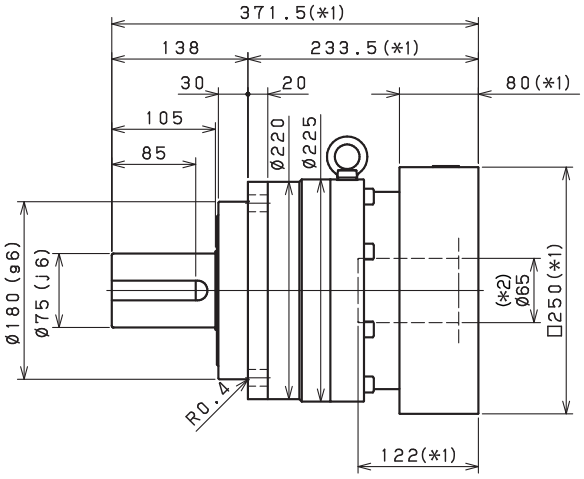

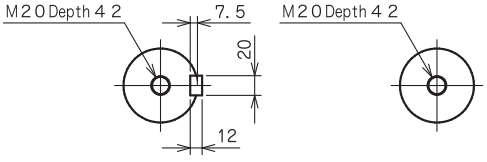

Shaft with key　　Smooth shaft

*1) Length will vary depending on motor

*2) Bushing will be inserted to adapt to motor shaft

VRB-220 – 2-Stage Dimensions

Input shaft bore ≦φ38

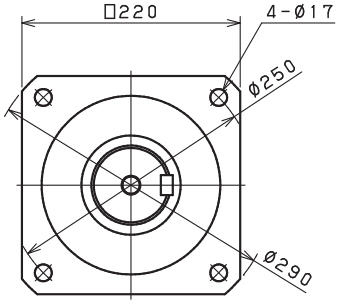

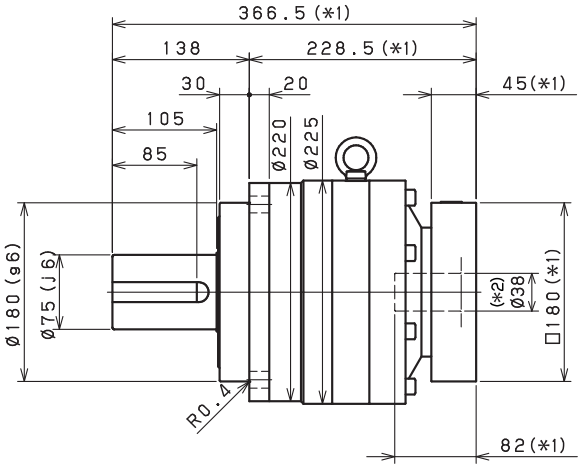

Input shaft bore ≦φ48

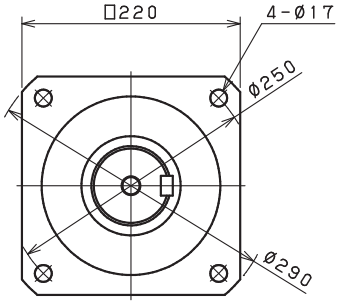

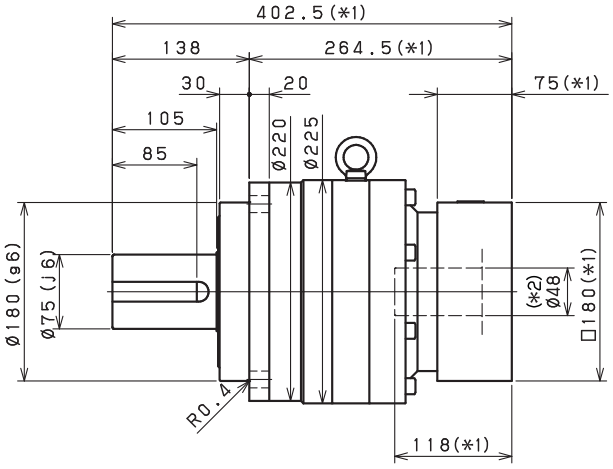

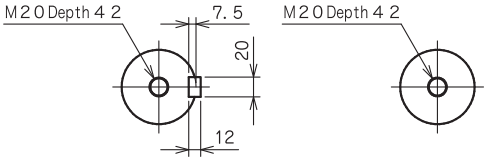

Shaft with key　　Smooth shaft

*1) Length will vary depending on motor

*2) Bushing will be inserted to adapt to motor shaft

VRB-220 – 1-Stage Adapter Dimensions

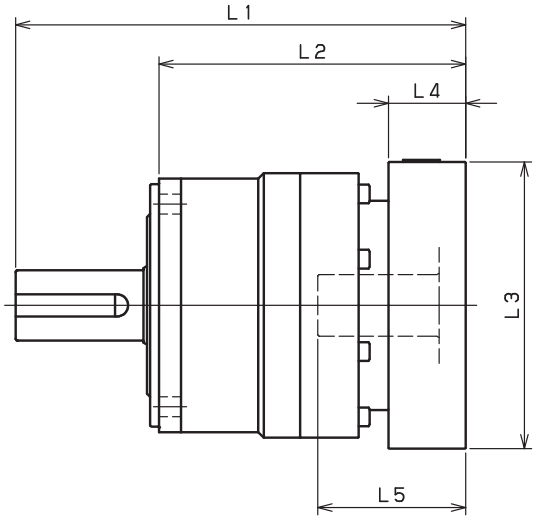

Model number	**: Adapter code	1-Stage					
		L1	L*	L2	L3	L4	L5
VRB-220-□-□-38** (Input shaft bore ≦ φ38)	HA	--	--	--	--	--	--
	HB•HE	--	--	--	--	--	--
	JA	--	--	--	--	--	--
	KA•KB•KC	--	--	--	--	--	--
	KD	--	--	--	--	--	--
	KE	--	--	--	--	--	--
	LA	--	--	--	--	--	--
	LB	--	--	--	--	--	--
	MA•MB	--	--	--	--	--	--
	MC	--	--	--	--	--	--
	MD	--	--	--	--	--	--
	NA	--	--	--	--	--	--
VRB-220-□-□-48** (Input shaft bore ≦ φ48)	KA	367.5	292.5	229.5	□180	75	118
	KB•KC	347.5	292.5	209.5	□180	55	98
	LA	347.5	292.5	209.5	□200	55	98
	MA	347.5	292.5	209.5	□220	55	98
	MB	367.5	292.5	229.5	□220	75	118
	NA	367.5	292.5	229.5	□250	75	118
	PA	367.5	292.5	229.5	□280	75	118
VRB-220-□-□-65** (Input shaft bore ≦ φ65)	MA•MB•MC•MD	371.5	291.5	233.5	□220	80	122
	NA•NC	371.5	291.5	233.5	□250	80	122
	NB•ND	401.5	291.5	263.5	□250	110	152
	PA	391.5	291.5	253.5	□280	100	142
	PB	401.5	291.5	263.5	□280	110	152
	QA•QB	391.5	291.5	253.5	□320	100	142

*1) Single reduction : 1/3~ 1/10

*2) Bushing will be inserted to adapt to motor shaft

For an explanation on the Adapter Flange Code, please turn to page 422.

A more comprehensive adapter flange offering can be found using the NIDEC-SHIMPO Online Selector Tool. The variety is constantly expanding and being updated on the Selector Tool. If you have any questions or need any support, contact NIDEC-SHIMPO.

VRB-220 – 2-Stage Adapter Dimensions

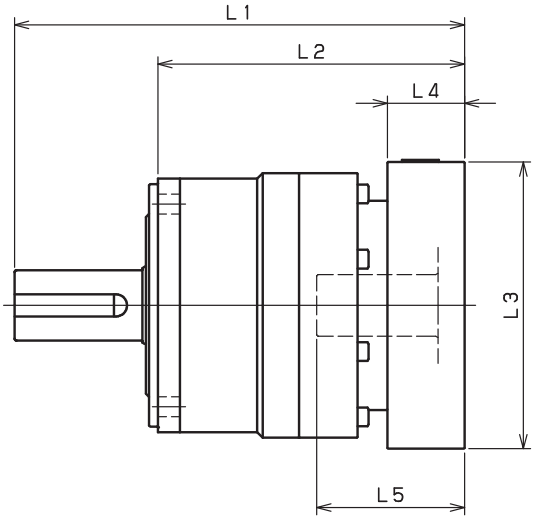

Model number	**: Adapter code	2-Stage					
		L1	L*	L2	L3	L4	L5
VRB-220-□-□-38** (Input shaft bore ≦ φ38)	HA	366.5	321.5	228.5	□130	45	82
	HB•HE	361.5	321.5	223.5	□130	40	77
	JA	366.5	321.5	228.5	□150	45	82
	KA•KB•KC	366.5	321.5	228.5	□180	45	82
	KD	401.5	321.5	263.5	□180	80	117
	KE	381.5	321.5	243.5	□180	60	97
	LA	366.5	321.5	228.5	□200	45	82
	LB	376.5	321.5	238.5	□200	55	92
	MA•MB	366.5	321.5	228.5	□220	45	82
	MC	381.5	321.5	243.5	□220	60	97
	MD	376.5	321.5	238.5	□220	55	92
	NA	366.5	321.5	228.5	□250	45	82
VRB-220-□-□-48** (Input shaft bore ≦ φ48)	KA	402.5	327.5	264.5	□180	75	118
	KB•KC	382.5	327.5	244.5	□180	55	98
	LA	382.5	327.5	244.5	□200	55	98
	MA	382.5	327.5	244.5	□220	55	98
	MB	402.5	327.5	264.5	□220	75	118
	NA	402.5	327.5	264.5	□250	75	118
	PA	402.5	327.5	264.5	□280	75	118
VRB-220-□-□-65** (Input shaft bore ≦ φ65)	MA•MB•MC•MD	--	--	--	--	--	--
	NA•NC	--	--	--	--	--	--
	NB•ND	--	--	--	--	--	--
	PA	--	--	--	--	--	--
	PB	--	--	--	--	--	--
	QA•QB	--	--	--	--	--	--

*1) Double reduction : 1/15~ 1/100

*2) Bushing will be inserted to adapt to motor shaft

For an explanation on the Adapter Flange Code, please turn to page 422.

A more comprehensive adapter flange offering can be found using the NIDEC-SHIMPO Online Selector Tool. The variety is constantly expanding and being updated on the Selector Tool. If you have any questions or need any support, contact NIDEC-SHIMPO.

VRS-SERIES

This planetary series has exceptional load handling capabilities, and it is an ideal selection for higher speed and continuous duty applications. The tapered roller bearings at the output of the reducer allow the VRS gearbox to handle larger radial and thrust loads. This internal design provides an extremely smooth running and quiet reducer even with challenging static forces.

The VRS series is the premier inline series with a maximum 3 arc-min backlash rating and an output torque peaking at 3,700 Nm. The VRS series is commonly utilized in applications such as higher speed packaging and converting equipment, printing machinery and any servo application requiring very low backlash in a more demanding environment.

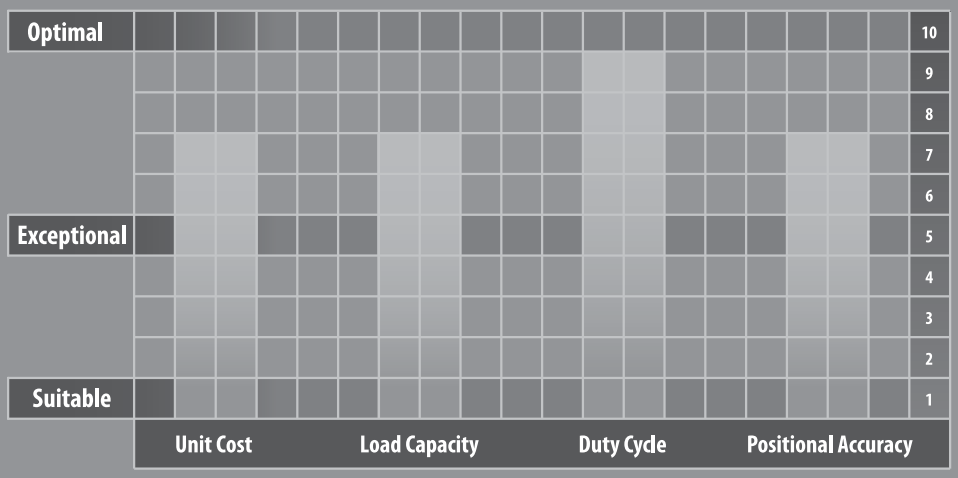

VRS-SERIES

- Industry standard mounting dimensions
- Large variety of frame sizes and ratios
- Thru-bolt mounting style
- Best-in-class backlash (≤3 arc-min)
- Impressive radial and axial load ratings
- Ships in 48 hours in standard frame sizes
- Assembled in the USA

VRS-Series – Features

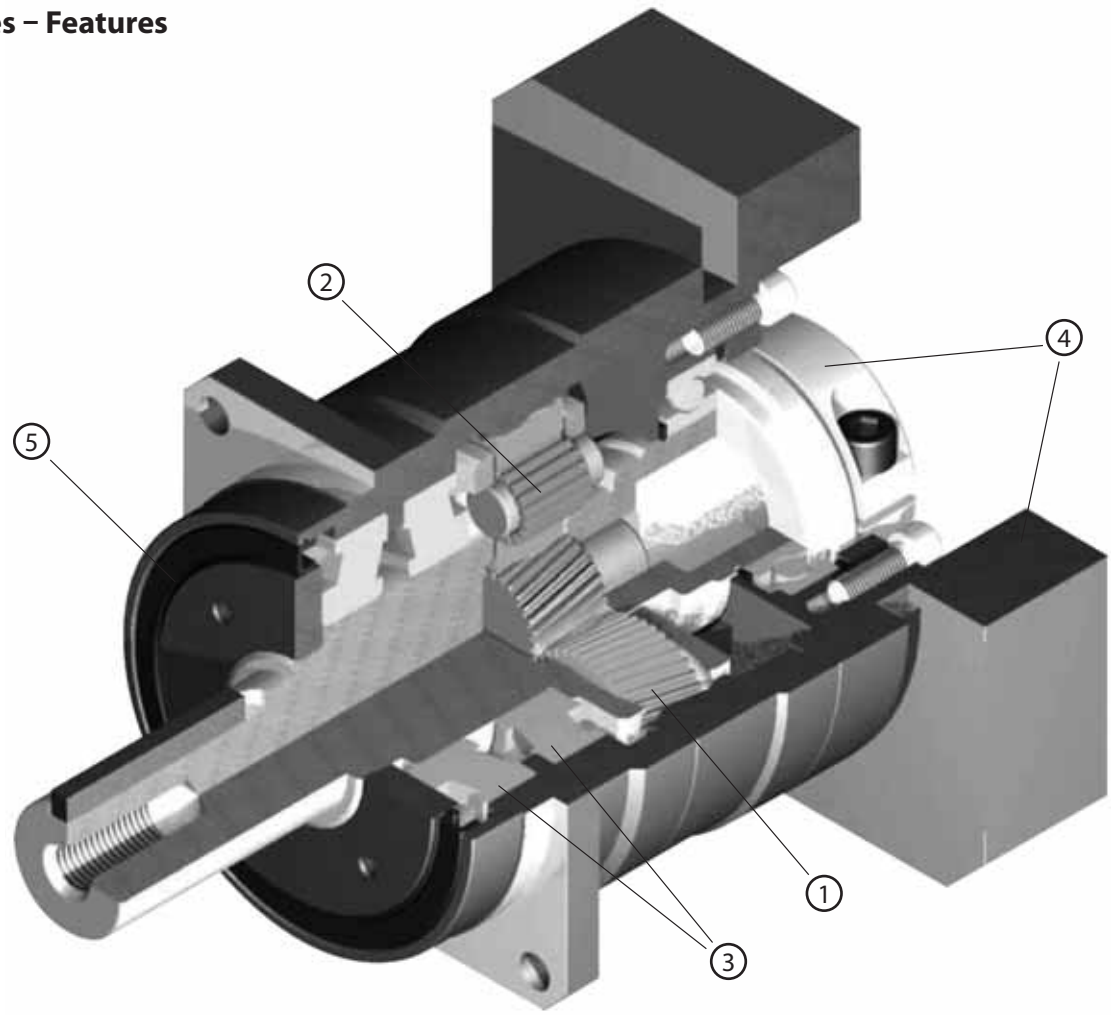

1. High precision: Standard backlash is 3 arc-min, ideal for higher levels of positional accuracy
2. High rigidity & torque: Rigidity and torque capacity are achieved by using uncaged needle roller bearings
3. High load capacity: Taper roller bearings were added to the output section to increase radial and axial load ratings
4. Adapter-bushing connection: Enables a simple, effective attachment to most servo motors
5. No leakage through the seal: High viscosity, anti-separation grease does not liquefy and does not migrate away from the gears
6. Maintenance-free: No need to replace the grease for the life of the unit. The reducer can be positioned in any orientation

VRS-Series – Model Code

VR	S	–	100	B	–	7	–	K	3	–	19HB16

- 19HB16 — * Adapter flange code
- 3 — Backlash: 3・・・ 3arc-min
- K — Output style: K・・・ Shaft with key; S・・・ Smooth shaft
- 7 — Ratio: Single: 3, 4, 5, 6, 7, 8, 9, 10; Double: 15, 16, 20, 25, 28, 30, 35, 40, 45, 50, 60, 70, 80, 90, 100
- B — Generation of design
- 100 — Frame size: 060, 075, 100, 140, 180, 210, 240
- S — Series name: VRS Series
- VR — Model name for ABLE reducer

*1) Adapter flange code
Adapter flange code varies depending on the motor

Contact us for additional information or refer to our online reducer selection tool.
Selection tool www.nidec-shimpo.co.jp/selection/eng

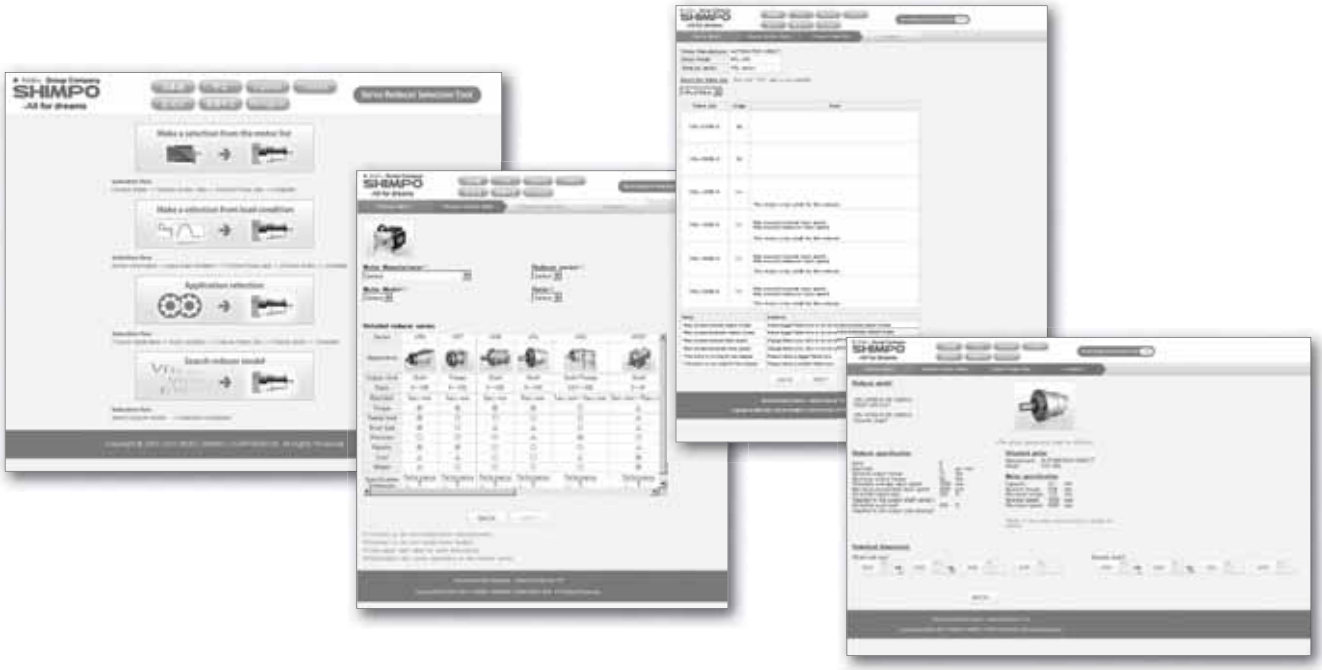

VRS-060 – 1-Stage Specifications

Frame Size	**060**									
Stage	**1-Stage**									
Ratio	Unit	Note	3	4	5	6	7	8	9	10
Nominal Output Torque	[Nm]	*1	18	27	27	27	27	27	18	18
Maximum Acceleration Torque	[Nm]	*2	35	50	50	50	50	50	35	35
Emergency Stop Torque	[Nm]	*3	80	100	100	100	100	100	80	80
Nominal Input Speed	[rpm]	*4	3000							
Maximum Input Speed	[rpm]	*5	6000							
No Load Running Torque	[Nm]	*6	0.15							
Permitted Radial Load	[N]	*7	1700	1900	2000	2100	2200	2300	2400	2400
Permitted Axial Load	[N]	*8	2300	2500	2700	2700	2700	2700	2700	2700
Maximum Radial Load	[N]	*9	3000							
Maximum Axial Load	[N]	*10	2700							
Moment of Inertia (≤Ø 8)	[kgcm2]	--	0.150	0.100	0.080	0.070	0.064	0.060	0.058	0.056
Moment of Inertia (≤ Ø 14)	[kgcm2]	--	0.230	0.180	0.160	0.150	0.140	0.140	0.140	0.140
Moment of Inertia (≤ Ø 19)	[kgcm2]	--	0.440	0.390	0.370	0.360	0.350	0.350	0.350	0.340
Efficiency	[%]	*11	95							
Torsional Rigidity	[Nm/arc-min]	*12	3							
Maximum Torsional Backlash	[arc-min]	--	≤ 3							
Noise Level	[dB]	*13	66							
Protection Class	--	*14	IP54 (IP65)							
Ambient Temperature	[°C]	--	0-40							
Permitted Housing Temperature	[°C]	--	90							
Weight	[kg]	*15	1.6							

VRS-060 – 2-Stage Specifications

Frame Size	**060**									
Stage	**2-Stage**									
Ratio	Unit	Note	15	16	20	25	28	30	35	40
Nominal Output Torque	[Nm]	*1	18	27	27	27	27	18	27	27
Maximum Acceleration Torque	[Nm]	*2	35	50	50	50	50	35	50	50
Emergency Stop Torque	[Nm]	*3	80	100	100	100	100	80	100	100
Nominal Input Speed	[rpm]	*4	3000							
Maximum Input Speed	[rpm]	*5	6000							
No Load Running Torque	[Nm]	*6	0.04							
Permitted Radial Load	[N]	*7	2800	2800	3000	3000	3000	3000	3000	3000
Permitted Axial Load	[N]	*8	2700	2700	2700	2700	2700	2700	2700	2700
Maximum Radial Load	[N]	*9	3000							
Maximum Axial Load	[N]	*10	2700							
Moment of Inertia (≤Ø 8)	[kgcm2]	--	0.055	0.057	0.054	0.053	0.055	0.049	0.053	0.049
Moment of Inertia (≤ Ø 14)	[kgcm2]	--	0.140	0.140	0.130	0.130	0.140	0.130	0.130	0.130
Moment of Inertia (≤ Ø 19)	[kgcm2]	--	--	--	--	--	--	--	--	--
Efficiency	[%]	*11	90							
Torsional Rigidity	[Nm/arc-min]	*12	3							
Maximum Torsional Backlash	[arc-min]	--	≤ 3							
Noise Level	[dB]	*13	66							
Protection Class	--	*14	IP54 (IP65)							
Ambient Temperature	[°C]	--	0-40							
Permitted Housing Temperature	[°C]	--	90							
Weight	[kg]	*15	1.8							

VRS-060 – 2-Stage Specifications

Frame Size	060								
Stage	**2-Stage**								
Ratio	Unit	Note	45	50	60	70	80	90	100
Nominal Output Torque	[Nm]	*1	18	27	27	27	27	18	18
Maximum Acceleration Torque	[Nm]	*2	35	50	50	50	50	35	35
Emergency Stop Torque	[Nm]	*3	80	100	100	100	100	80	80
Nominal Input Speed	[rpm]	*4	3000						
Maximum Input Speed	[rpm]	*5	6000						
No Load Running Torque	[Nm]	*6	0.04						
Permitted Radial Load	[N]	*7	3000	3000	3000	3000	3000	3000	3000
Permitted Axial Load	[N]	*8	2700	2700	2700	2700	2700	2700	2700
Maximum Radial Load	[N]	*9	3000						
Maximum Axial Load	[N]	*10	2700						
Moment of Inertia (≤Ø 8)	[kgcm2]	--	0.053	0.049	0.049	0.049	0.049	0.049	0.049
Moment of Inertia (≤ Ø 14)	[kgcm2]	--	0.130	0.130	0.130	0.130	0.130	0.130	0.130
Moment of Inertia (≤ Ø 19)	[kgcm2]	--	--	--	--	--	--	--	--
Efficiency	[%]	*11	90						
Torsional Rigidity	[Nm/arc-min]	*12	3						
Maximum Torsional Backlash	[arc-min]	--	≤ 3						
Noise Level	[dB]	*13	66						
Protection Class	--	*14	IP54 (IP65)						
Ambient Temperature	[°C]	--	0-40						
Permitted Housing Temperature	[°C]	--	90						
Weight	[kg]	*15	1.8						

*1) At nominal input speed, service life is 20,000 hours
*2) The maximum torque when starting or stopping operation
*3) The maximum torque allowed under a stress situation (Permitted 1,000 times during service life)
*4) The average input speed
*5) The maximum intermittent input speed
*6) This is the torque at no load applied on the input shaft. The input speed is 3,000 rpm for VRS060
*7) At this load and nominal input speed, service life will be 20,000 hours. (The radial load applied to the output side bearing)
*8) At this load and nominal input speed, service life will be 20,000 hours. (The axial load applied to the output shaft center)
*9) The maximum radial load that the reducer can accept
*10) The maximum axial load that the reducer can accept
*11) The efficiency at the nominal torque rating
*12) This does not include the lost motion
*13) Contact NIDEC-SHIMPO for the testing conditions and environment
*14) IP65 (wash-down) is available as an option. Contact NIDEC-SHIMPO for more details and our food grade options
*15) The weight may vary slightly between models

VRS-o6o – 1-Stage Dimensions

Input shaft bore ≦φ8

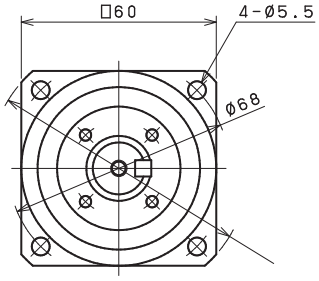

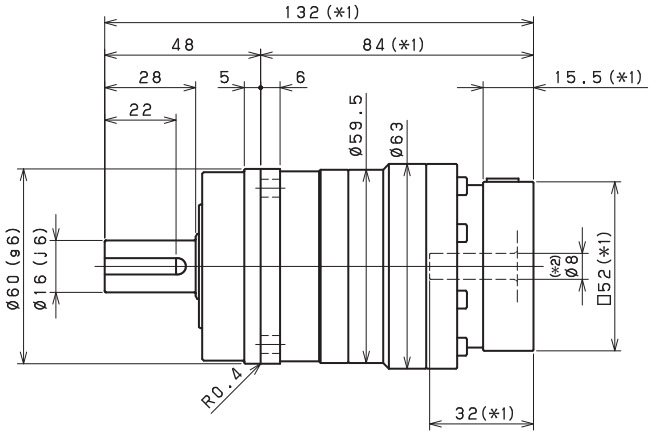

Input shaft bore ≦φ14

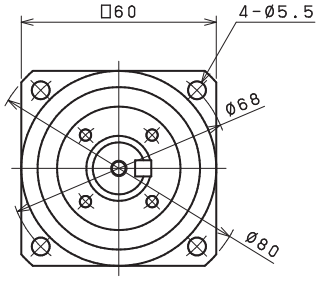

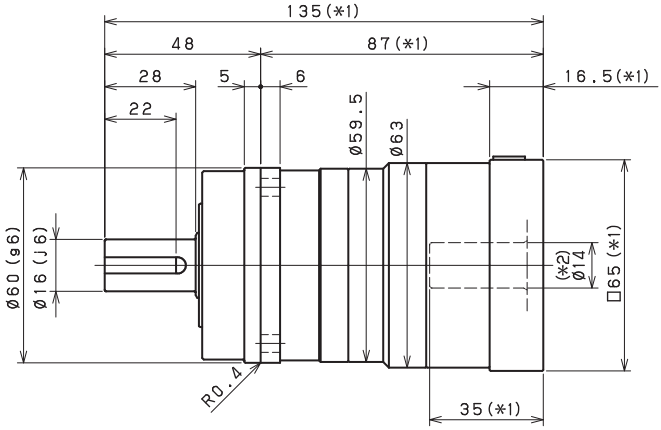

Input shaft bore ≦φ19

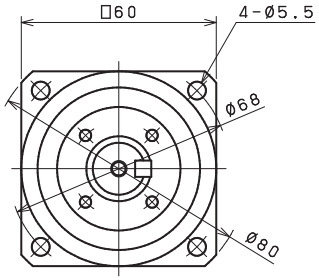

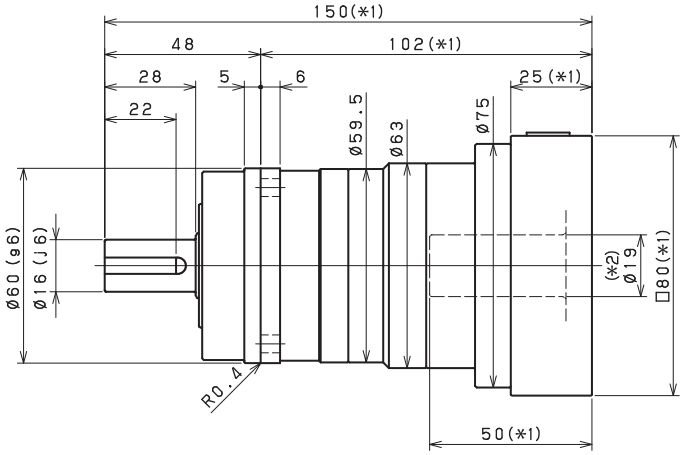

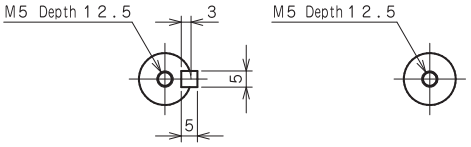

Shaft with key　　Smooth shaft

*1) Length will vary depending on motor

*2) Bushing will be inserted to adapt to motor shaft

VRS-060 – 2-Stage Dimensions

Input shaft bore ≦φ8

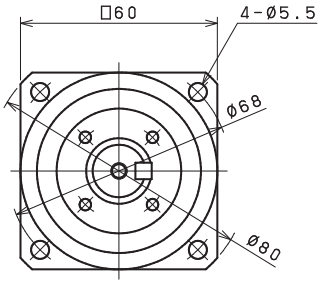

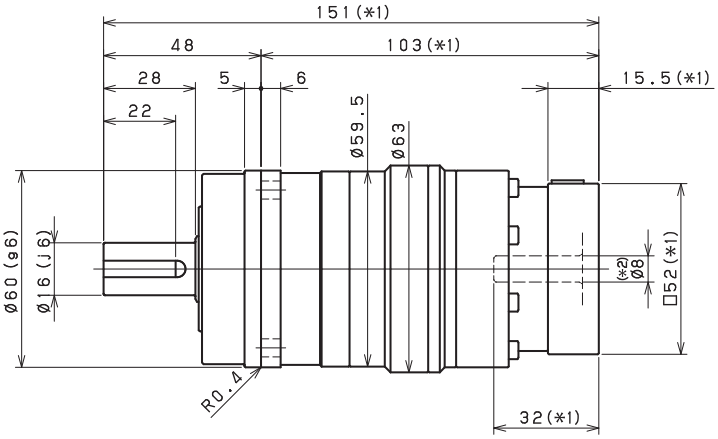

Input shaft bore ≦φ14

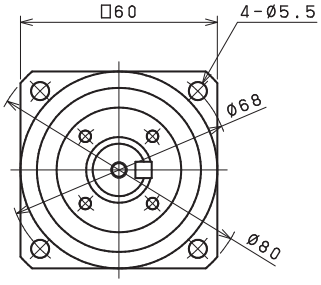

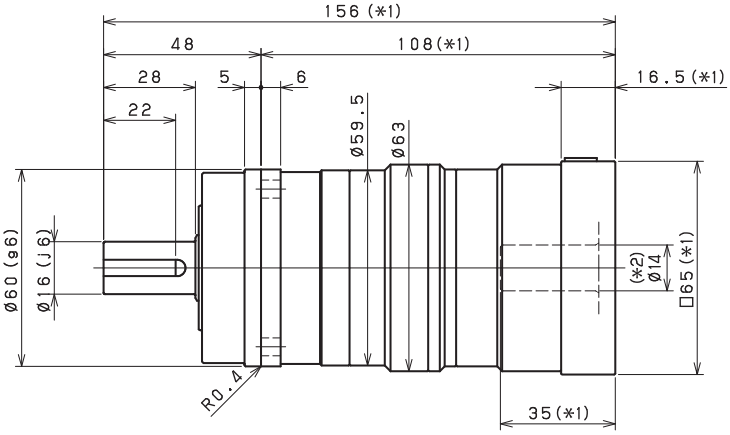

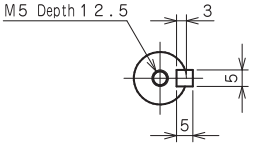

Shaft with key

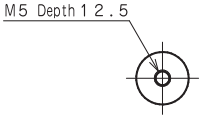

Smooth shaft

*1) Length will vary depending on motor

*2) Bushing will be inserted to adapt to motor shaft

VRS

VRS-060 – 1-Stage Adapter Dimensions

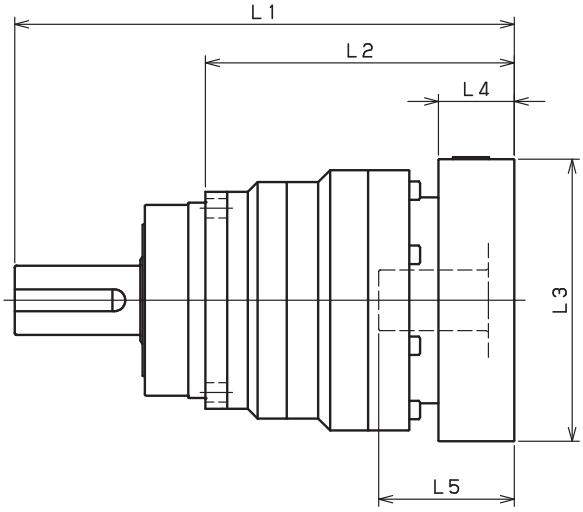

Model number	**: Adapter code	1-Stage					
		L1	L*	L2	L3	L4	L5
VRS-060-□-□-8** (Input shaft bore ≦ φ8)	AA•AC•AD•AF•AG•AL•AM•AN•AQ	132	116.5	84	□52	15.5	32
	AB•AE•AH•AJ•AK	137	116.5	89	□52	20.5	37
	BA•BB•BD•BE•BG•BH•BJ	132	116.5	84	□60	15.5	32
	BC•BF	137	116.5	89	□60	20.5	37
	CA	137	116.5	89	□70	20.5	37
VRS-060-□-□-14** (Input shaft bore ≦ φ14)	BA•BB•BD•BE•BF•BG•BH•BJ•BK•BP	135	118.5	87	□65	16.5	35
	BC•BH•BM•BN	140	118.5	92	□65	21.5	40
	BL	145	118.5	97	□65	26.5	45
	CA•CC	135	118.5	87	□70	16.5	35
	CB	140	118.5	92	□70	21.5	40
	DA•DB•DC•DD•DF•DH•DJ	135	118.5	87	□80	16.5	35
	DE•DL	140	118.5	92	□80	21.5	40
	DG•DK	145	118.5	97	□80	26.5	45
	EA•EB•EC•EF•EG•EK•EL	135	118.5	87	□90	16.5	35
	EJ•EM	140	118.5	92	□90	21.5	40
	ED•EE•EH	145	118.5	97	□90	26.5	45
	FA	135	118.5	87	□100	16.5	35
	FB	135	118.5	87	□115	16.5	35
VRS-060-□-□-19** (Input shaft bore ≦ φ19)	DA•DB•DC	150	125	102	□80	25	50
	DD	160	125	112	□80	35	60
	DE	155	125	107	□80	30	55
	EA	155	125	107	□90	30	55
	EB•ED	150	125	102	□90	25	50
	EC	160	125	112	□90	35	60
	FA	150	125	102	□100	25	50
	FB	160	125	112	□100	35	60

*1) Single reduction : 1/3~ 1/10

*2) Bushing will be inserted to adapt to motor shaft

For an explanation on the Adapter Flange Code, please turn to page 422.

A more comprehensive adapter flange offering can be found using the NIDEC-SHIMPO Online Selector Tool. The variety is constantly expanding and being updated on the Selector Tool. If you have any questions or need any support, contact NIDEC-SHIMPO.

VRS-060 – 2-Stage Adapter Dimensions

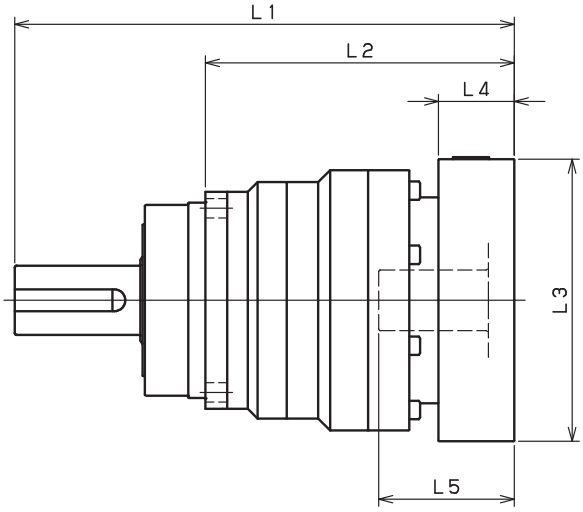

Model number	**: Adapter code	2-Stage					
		L1	L*	L2	L3	L4	L5
VRS-060-□-□-8** (Input shaft bore ≦ φ8)	AA•AC•AD•AF•AG•AL•AM•AN•AQ	151	135.5	103	□52	15.5	32
	AB•AE•AH•AJ•AK	156	135.5	108	□52	20.5	37
	BA•BB•BD•BE•BG•BH•BJ	151	135.5	103	□60	15.5	32
	BC•BF	156	135.5	108	□60	20.5	37
	CA	156	135.5	108	□70	20.5	37
VRS-060-□-□-14** (Input shaft bore ≦ φ14)	BA•BB•BD•BE•BF•BG•BH•BJ•BK•BP	156	139.5	108	□65	16.5	35
	BC•BH•BM•BN	161	139.5	113	□65	21.5	40
	BL	166	139.5	118	□65	26.5	45
	CA•CC	156	139.5	108	□70	16.5	35
	CB	161	139.5	113	□70	21.5	40
	DA•DB•DC•DD•DF•DH•DJ	156	139.5	108	□80	16.5	35
	DE•DL	161	139.5	113	□80	21.5	40
	DG•DK	166	139.5	118	□80	26.5	45
	EA•EB•EC•EF•EG•EK•EL	156	139.5	108	□90	16.5	35
	EJ•EM	161	139.5	113	□90	21.5	40
	ED•EE•EH	166	139.5	118	□90	26.5	45
	FA	156	139.5	108	□100	16.5	35
	FB	156	139.5	108	□115	16.5	35
VRS-060-□-□-19** (Input shaft bore ≦ φ19)	DA•DB•DC	171	146	123	□80	25	50
	DD	181	146	133	□80	35	60
	DE	176	146	128	□80	30	55
	EA	176	146	128	□90	30	55
	EB•ED	171	146	123	□90	25	50
	EC	181	146	133	□90	35	60
	FA	171	146	123	□100	25	50
	FB	181	146	133	□100	35	60

*1) Double reduction : 1/15~ 1/100

*2) Bushing will be inserted to adapt to motor shaft

For an explanation on the Adapter Flange Code, please turn to page 422.

A more comprehensive adapter flange offering can be found using the NIDEC-SHIMPO Online Selector Tool. The variety is constantly expanding and being updated on the Selector Tool. If you have any questions or need any support, contact NIDEC-SHIMPO.

VRS-075 – 1-Stage Specifications

Frame Size	**075**									
Stage	**1-Stage**									
Ratio	Unit	Note	3	4	5	6	7	8	9	10
Nominal Output Torque	[Nm]	*1	50	75	75	75	75	75	50	50
Maximum Acceleration Torque	[Nm]	*2	80	125	125	125	125	125	80	80
Emergency Stop Torque	[Nm]	*3	200	250	250	250	250	250	200	200
Nominal Input Speed	[rpm]	*4	3000							
Maximum Input Speed	[rpm]	*5	6000							
No Load Running Torque	[Nm]	*6	0.35							
Permitted Radial Load	[N]	*7	2300	2500	2700	2800	3000	3100	3200	3300
Permitted Axial Load	[N]	*8	3400	3700	3900	3900	3900	3900	3900	3900
Maximum Radial Load	[N]	*9	4300							
Maximum Axial Load	[N]	*10	3900							
Moment of Inertia (≤Ø 8)	[kgcm2]	--	--	--	--	--	--	--	--	--
Moment of Inertia (≤ Ø 14)	[kgcm2]	--	0.670	0.470	0.380	0.340	0.310	0.300	0.290	0.290
Moment of Inertia (≤ Ø 19)	[kgcm2]	--	1.100	0.930	0.850	0.810	0.780	0.760	0.750	0.750
Moment of Inertia (≤ Ø 28)	[kgcm2]	--	3.100	2.900	2.900	2.800	2.800	2.800	2.800	2.800
Efficiency	[%]	*11	95							
Torsional Rigidity	[Nm/arc-min]	*12	10							
Maximum Torsional Backlash	[arc-min]	--	≤ 3							
Noise Level	[dB]	*13	67							
Protection Class	--	*14	IP54 (IP65)							
Ambient Temperature	[°C]	--	0-40							
Permitted Housing Temperature	[°C]	--	90							
Weight	[kg]	*15	3.4							

VRS-075 – 2-Stage Specifications

Frame Size	**075**									
Stage	**2-Stage**									
Ratio	Unit	Note	15	16	20	25	28	30	35	40
Nominal Output Torque	[Nm]	*1	50	75	75	75	75	50	75	75
Maximum Acceleration Torque	[Nm]	*2	80	125	125	125	125	80	125	125
Emergency Stop Torque	[Nm]	*3	200	250	250	250	250	200	250	250
Nominal Input Speed	[rpm]	*4	3000							
Maximum Input Speed	[rpm]	*5	6000							
No Load Running Torque	[Nm]	*6	0.06							
Permitted Radial Load	[N]	*7	3700	3800	4000	4300	4300	4300	4300	4300
Permitted Axial Load	[N]	*8	3900	3900	3900	3900	3900	3900	3900	3900
Maximum Radial Load	[N]	*9	4300							
Maximum Axial Load	[N]	*10	3900							
Moment of Inertia (≤Ø 8)	[kgcm2]	--	0.130	0.140	0.130	0.120	0.140	0.099	0.120	0.098
Moment of Inertia (≤ Ø 14)	[kgcm2]	--	0.280	0.300	0.280	0.280	0.290	0.250	0.270	0.250
Moment of Inertia (≤ Ø 19)	[kgcm2]	--	0.720	0.730	0.720	0.710	0.730	0.700	0.710	0.690
Moment of Inertia (≤ Ø 28)	[kgcm2]	--	--	--	--	--	--	--	--	--
Efficiency	[%]	*11	90							
Torsional Rigidity	[Nm/arc-min]	*12	10							
Maximum Torsional Backlash	[arc-min]	--	≤ 3							
Noise Level	[dB]	*13	67							
Protection Class	--	*14	IP54 (IP65)							
Ambient Temperature	[°C]	--	0-40							
Permitted Housing Temperature	[°C]	--	90							
Weight	[kg]	*15	3.8							

VRS-075 – 2-Stage Specifications

Frame Size	075								
Stage	**2-Stage**								
Ratio	Unit	Note	45	50	60	70	80	90	100
Nominal Output Torque	[Nm]	*1	50	75	75	75	75	50	50
Maximum Acceleration Torque	[Nm]	*2	80	125	125	125	125	80	80
Emergency Stop Torque	[Nm]	*3	200	250	250	250	250	200	200
Nominal Input Speed	[rpm]	*4	3000						
Maximum Input Speed	[rpm]	*5	6000						
No Load Running Torque	[Nm]	*6	0.06						
Permitted Radial Load	[N]	*7	4300	4300	4300	4300	4300	4300	4300
Permitted Axial Load	[N]	*8	3900	3900	3900	3900	3900	3900	3900
Maximum Radial Load	[N]	*9	4300						
Maximum Axial Load	[N]	*10	3900						
Moment of Inertia (≤Ø 8)	[kgcm2]	--	0.120	0.098	0.098	0.097	0.097	0.097	0.097
Moment of Inertia (≤ Ø 14)	[kgcm2]	--	0.270	0.250	0.250	0.250	0.250	0.250	0.250
Moment of Inertia (≤ Ø 19)	[kgcm2]	--	0.710	0.690	0.690	0.690	0.690	0.690	0.690
Moment of Inertia (≤ Ø 28)	[kgcm2]	--	--	--	--	--	--	--	--
Efficiency	[%]	*11	90						
Torsional Rigidity	[Nm/arc-min]	*12	10						
Maximum Torsional Backlash	[arc-min]	--	≤ 3						
Noise Level	[dB]	*13	67						
Protection Class	--	*14	IP54 (IP65)						
Ambient Temperature	[°C]	--	0-40						
Permitted Housing Temperature	[°C]	--	90						
Weight	[kg]	*15	3.8						

*1) At nominal input speed, service life is 20,000 hours
*2) The maximum torque when starting or stopping operation
*3) The maximum torque allowed under a stress situation (Permitted 1,000 times during service life)
*4) The average input speed
*5) The maximum intermittent input speed
*6) This is the torque at no load applied on the input shaft. The input speed is 3,000 rpm for VRS075
*7) At this load and nominal input speed, service life will be 20,000 hours. (The radial load applied to the output side bearing)
*8) At this load and nominal input speed, service life will be 20,000 hours. (The axial load applied to the output shaft center)
*9) The maximum radial load that the reducer can accept
*10) The maximum axial load that the reducer can accept
*11) The efficiency at the nominal torque rating
*12) This does not include the lost motion
*13) Contact NIDEC-SHIMPO for the testing conditions and environment
*14) IP65 (wash-down) is available as an option. Contact NIDEC-SHIMPO for more details and our food grade options
*15) The weight may vary slightly between models

VRS-075 – 1-Stage Dimensions

Input shaft bore ≦φ14

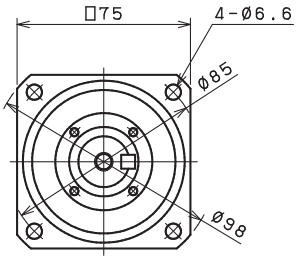

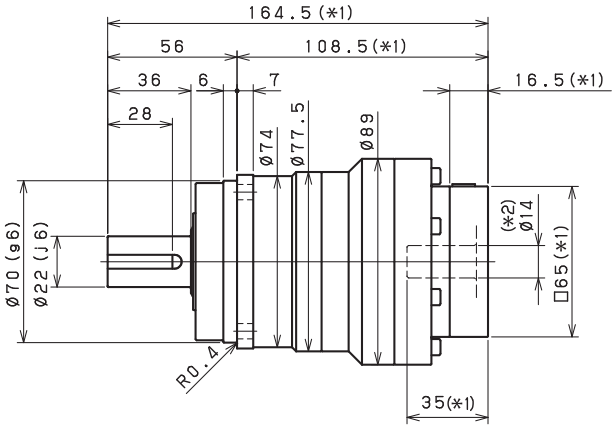

Input shaft bore ≦φ19

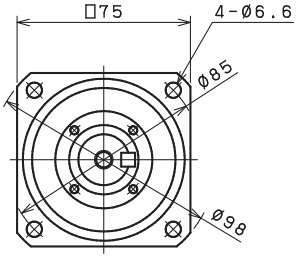

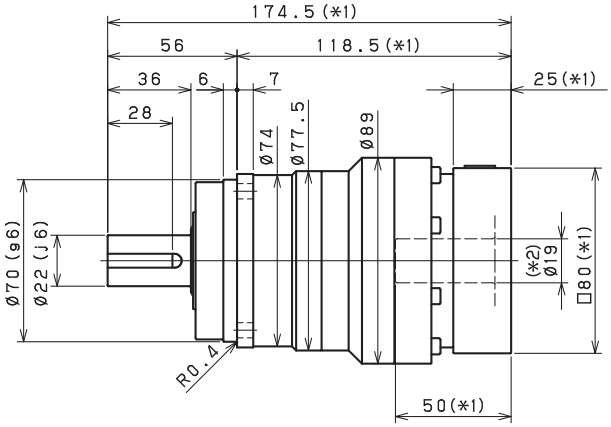

Input shaft bore ≦φ28

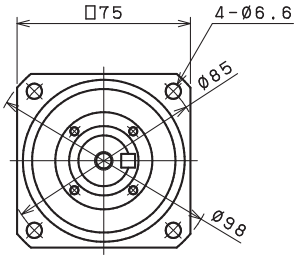

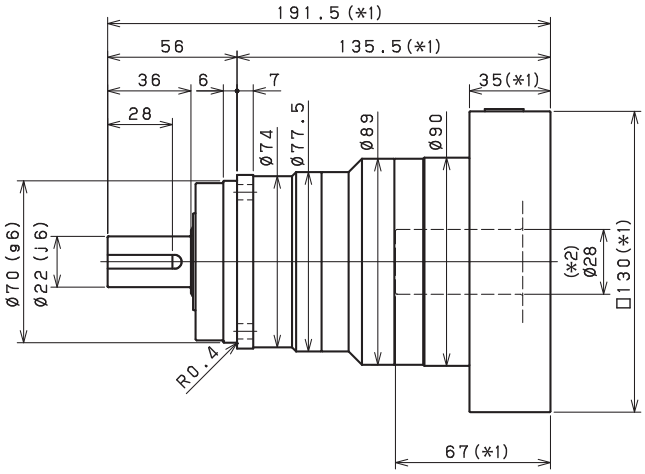

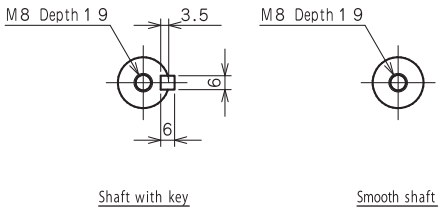

*1) Length will vary depending on motor

*2) Bushing will be inserted to adapt to motor shaft

VRS-075 – 2-Stage Dimensions

Input shaft bore ≦φ8

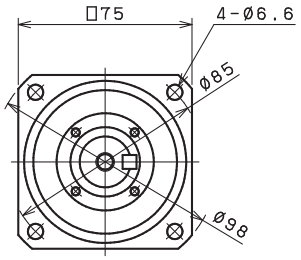

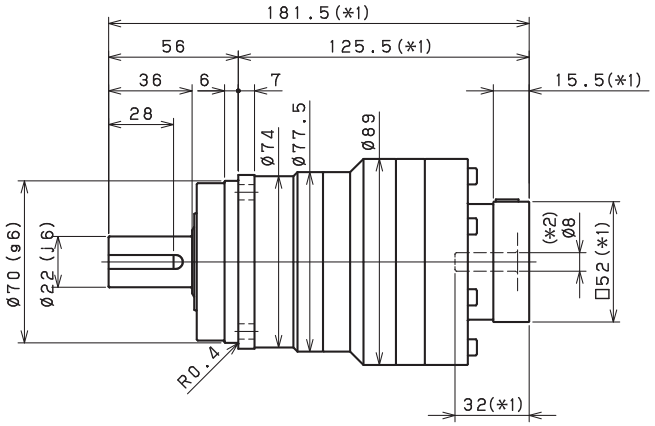

Input shaft bore ≦φ14

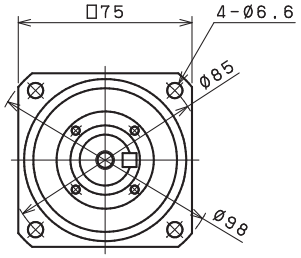

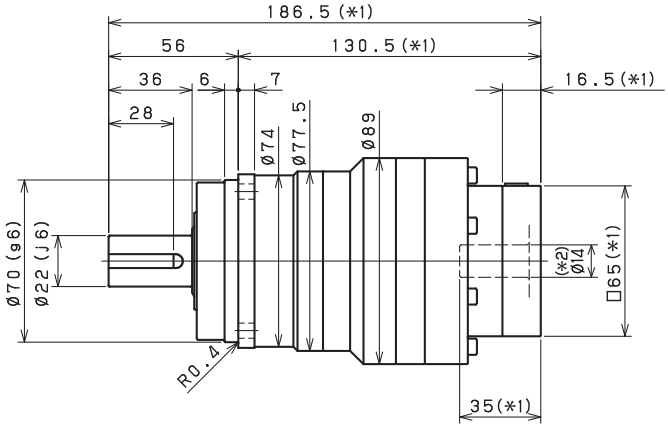

Input shaft bore ≦φ19

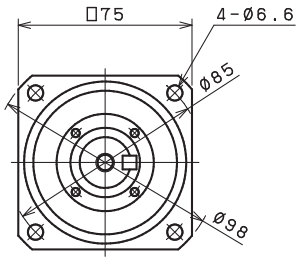

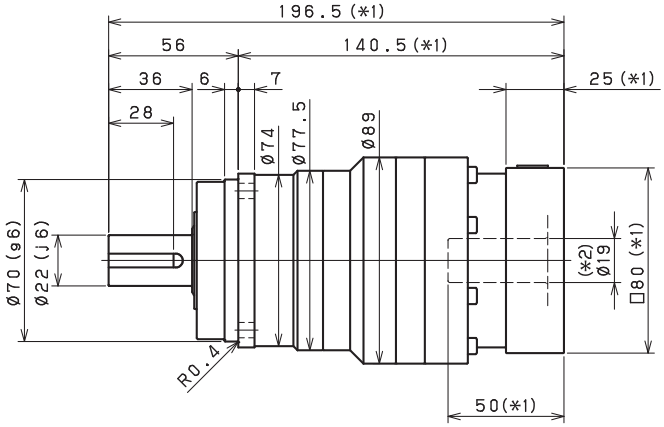

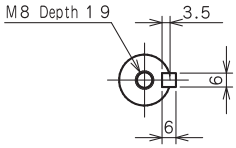

Shaft with key

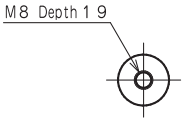

Smooth shaft

*1) Length will vary depending on motor

*2) Bushing will be inserted to adapt to motor shaft

VRS-075 – 1-Stage Adapter Dimensions

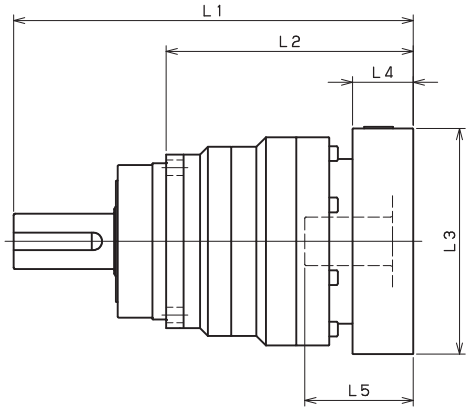

Model number	**: Adapter code	1-Stage					
		L1	L*	L2	L3	L4	L5
VRS-075-□-□-8** (Input shaft bore ≦ φ8)	AA•AC•AD•AF•AG•AL•AM•AN•AQ	--	--	--	--	--	--
	AB•AE•AH•AJ•AK	--	--	--	--	--	--
	BA•BB•BD•BE•BG•BH•BJ	--	--	--	--	--	--
	CA	--	--	--	--	--	--
VRS-075-□-□-14** (Input shaft bore ≦ φ14)	BA•BB•BD•BE•BF•BG•BH•BJ•BK•BP	164.5	148	108.5	□65	16.5	35
	BC•BH•BM•BN	169.5	148	113.5	□65	21.5	40
	CA•CC	164.5	148	108.5	□70	16.5	35
	DA•DB•DC•DD•DF•DH•DJ	164.5	148	108.5	□80	16.5	35
	EA•EB•EC•EF•EG•EK•EL	164.5	148	108.5	□90	16.5	35
	FA	164.5	148	108.5	□100	16.5	35
	FB	174.5	148	118.5	□100	26.5	45
	JA	179.5	148	123.5	□150	31.5	50
VRS-075-□-□-19** (Input shaft bore ≦ φ19)	DA•DB•DC	174.5	149.5	118.5	□80	25	50
	EB•ED	174.5	149.5	118.5	□90	25	50
	FA	174.5	149.5	118.5	□100	25	50
	FB	184.5	149.5	128.5	□100	35	60
	GA•GC•GH	179.5	149.5	123.5	□115	30	55
	GB•GD•GJ	174.5	149.5	118.5	□115	25	50
	GE•GF	184.5	149.5	128.5	□115	35	60
	HA	174.5	149.5	118.5	□130	25	50
	HB	189.5	149.5	133.5	□130	40	65
	HC•HD•HE	179.5	149.5	123.5	□130	30	55
	JA	184.5	149.5	128.5	□150	35	60
	JB	189.5	149.5	133.5	□150	40	65
VRS-075-□-□-28** (Input shaft bore ≦ φ28)	FA•FB•FC	191.5	156.5	135.5	□100	35	67
	FD•FE	186.5	156.5	130.5	□100	30	62
	GA•GB•GC•GD•GE•GF•GG•GH	191.5	156.5	135.5	□115	35	67
	HA•HC•HD	191.5	156.5	135.5	□130	35	67
	HB	201.5	156.5	145.5	□130	45	77
	HE	206.5	156.5	150.5	□130	50	82
	HF	186.5	156.5	130.5	□130	30	62
	JA•JB•JC•JF	191.5	156.5	135.5	□150	35	67
	JD	211.5	156.5	155.5	□150	55	87
	JE	201.5	156.5	145.5	□150	45	77

*1) Single reduction : 1/3~ 1/10 *2) Bushing will be inserted to adapt to motor shaft

For an explanation on the Adapter Flange Code, please turn to page 422.

A more comprehensive adapter flange offering can be found using the NIDEC-SHIMPO Online Selector Tool. The variety is constantly expanding and being updated on the Selector Tool. If you have any questions or need any support, contact NIDEC-SHIMPO.

VRS-075 – 2-Stage Adapter Dimensions

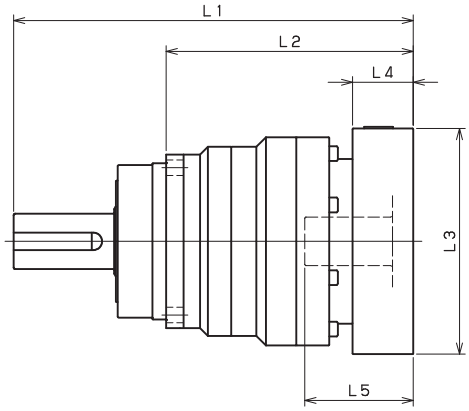

Model number	**: Adapter code	2-Stage					
		L1	L*	L2	L3	L4	L5
VRS-075-□-□-8** (Input shaft bore ≦ φ8)	AA•AC•AD•AF•AG•AL•AM•AN•AQ	181.5	166	125.5	□52	15.5	32
	AB•AE•AH•AJ•AK	186.5	166	130.5	□52	20.5	37
	BA•BB•BD•BE•BG•BH•BJ	181.5	166	125.5	□60	15.5	32
	CA	186.5	166	130.5	□70	20.5	37
VRS-075-□-□-14** (Input shaft bore ≦ φ14)	BA•BB•BD•BE•BF•BG•BH•BJ•BK•BP	186.5	170	130.5	□65	16.5	35
	BC•BH•BM•BN	191.5	170	135.5	□65	21.5	40
	CA•CC	186.5	170	130.5	□70	16.5	35
	DA•DB•DC•DD•DF•DH•DJ	186.5	170	130.5	□80	16.5	35
	EA•EB•EC•EF•EG•EK•EL	186.5	170	130.5	□90	16.5	35
	FA	186.5	170	130.5	□100	16.5	35
	FB	196.5	170	140.5	□100	26.5	45
	JA	201.5	170	145.5	□150	31.5	50
VRS-075-□-□-19** (Input shaft bore ≦ φ19)	DA•DB•DC	196.5	171.5	140.5	□80	25	50
	EB•ED	196.5	171.5	140.5	□90	25	50
	FA	196.5	171.5	140.5	□100	25	50
	FB	206.5	171.5	150.5	□100	35	60
	GA•GC•GH	201.5	171.5	145.5	□115	30	55
	GB•GD•GJ	196.5	171.5	140.5	□115	25	50
	GE•GF	206.5	171.5	150.5	□115	35	60
	HA	196.5	171.5	140.5	□130	25	50
	HB	211.5	171.5	155.5	□130	40	65
	HC•HD•HE	201.5	171.5	145.5	□130	30	55
	JA	206.5	171.5	150.5	□150	35	60
	JB	211.5	171.5	155.5	□150	40	65
VRS-075-□-□-28** (Input shaft bore ≦ φ28)	FA•FB•FC	215.5	180.5	159.5	□100	35	67
	FD•FE	210.5	180.5	154.5	□100	30	62
	GA•GB•GC•GD•GE•GF•GG•GH	215.5	180.5	159.5	□115	35	67
	HA•HC•HD	215.5	180.5	159.5	□130	35	67
	HB	225.5	180.5	169.5	□130	45	77
	HE	230.5	180.5	174.5	□130	50	82
	HF	210.5	180.5	154.5	□130	30	62
	JA•JB•JC•JF	215.5	180.5	159.5	□150	35	67
	JD	235.5	180.5	179.5	□150	55	87
	JE	225.5	180.5	169.5	□150	45	77

*1) Double reduction : 1/15~ 1/100 *2) Bushing will be inserted to adapt to motor shaft

For an explanation on the Adapter Flange Code, please turn to page 422.

A more comprehensive adapter flange offering can be found using the NIDEC-SHIMPO Online Selector Tool. The variety is constantly expanding and being updated on the Selector Tool. If you have any questions or need any support, contact NIDEC-SHIMPO.

VRS-100 – 1-Stage Specifications

Frame Size	**100**									
Stage	**1-Stage**									
Ratio	Unit	Note	3	4	5	6	7	8	9	10
Nominal Output Torque	[Nm]	*1	120	120	180	180	180	180	120	120
Maximum Acceleration Torque	[Nm]	*2	225	330	330	330	330	330	225	225
Emergency Stop Torque	[Nm]	*3	500	625	625	625	625	625	500	500
Nominal Input Speed	[rpm]	*4	3000							
Maximum Input Speed	[rpm]	*5	6000							
No Load Running Torque	[Nm]	*6	1.30							
Permitted Radial Load	[N]	*7	3400	3700	4000	4200	4400	4600	4800	4900
Permitted Axial Load	[N]	*8	4800	5200	5600	5900	6100	6300	6300	6300
Maximum Radial Load	[N]	*9	7000							
Maximum Axial Load	[N]	*10	6300							
Moment of Inertia (≤Ø 14)	[kgcm2]	--	--	--	--	--	--	--	--	--
Moment of Inertia (≤ Ø 19)	[kgcm2]	--	3.200	2.000	1.500	1.300	1.100	1.000	0.960	0.930
Moment of Inertia (≤ Ø 28)	[kgcm2]	--	5.200	4.000	3.600	3.300	3.100	3.000	3.000	3.000
Moment of Inertia (≤ Ø 38)	[kgcm2]	--	13.000	12.000	11.000	11.000	11.000	11.000	11.000	11.000
Efficiency	[%]	*11	95							
Torsional Rigidity	[Nm/arc-min]	*12	31							
Maximum Torsional Backlash	[arc-min]	--	≤ 3							
Noise Level	[dB]	*13	71							
Protection Class	--	*14	IP54 (IP65)							
Ambient Temperature	[°C]	--	0-40							
Permitted Housing Temperature	[°C]	--	90							
Weight	[kg]	*15	8.1							

VRS-100 – 2-Stage Specifications

Frame Size	**100**									
Stage	**2-Stage**									
Ratio	Unit	Note	15	16	20	25	28	30	35	40
Nominal Output Torque	[Nm]	*1	120	180	180	180	180	120	180	180
Maximum Acceleration Torque	[Nm]	*2	225	330	330	330	330	225	330	330
Emergency Stop Torque	[Nm]	*3	500	625	625	625	625	500	625	625
Nominal Input Speed	[rpm]	*4	3000							
Maximum Input Speed	[rpm]	*5	6000							
No Load Running Torque	[Nm]	*6	0.42							
Permitted Radial Load	[N]	*7	5600	5700	6100	6500	6700	6900	7000	7000
Permitted Axial Load	[N]	*8	6300	6300	6300	6300	6300	6300	6300	6300
Maximum Radial Load	[N]	*9	7000							
Maximum Axial Load	[N]	*10	6300							
Moment of Inertia (≤Ø 14)	[kgcm2]	--	0.420	0.480	0.400	0.380	0.440	0.290	0.370	0.280
Moment of Inertia (≤ Ø 19)	[kgcm2]	--	0.860	0.910	0.830	0.820	0.870	0.740	0.810	0.730
Moment of Inertia (≤ Ø 28)	[kgcm2]	--	2.800	2.900	2.800	2.800	2.800	2.700	2.700	2.700
Moment of Inertia (≤ Ø 38)	[kgcm2]	--	--	--	--	--	--	--	--	--
Efficiency	[%]	*11	90							
Torsional Rigidity	[Nm/arc-min]	*12	31							
Maximum Torsional Backlash	[arc-min]	--	≤ 3							
Noise Level	[dB]	*13	71							
Protection Class	--	*14	IP54 (IP65)							
Ambient Temperature	[°C]	--	0-40							
Permitted Housing Temperature	[°C]	--	90							
Weight	[kg]	*15	8.8							

VRS-100 – 2-Stage Specifications

Frame Size	100								
Stage	**2-Stage**								
Ratio	Unit	Note	45	50	60	70	80	90	100
Nominal Output Torque	[Nm]	*1	120	180	180	180	180	120	120
Maximum Acceleration Torque	[Nm]	*2	225	330	330	330	330	225	225
Emergency Stop Torque	[Nm]	*3	500	625	625	625	625	500	500
Nominal Input Speed	[rpm]	*4	3000						
Maximum Input Speed	[rpm]	*5	6000						
No Load Running Torque	[Nm]	*6	0.42						
Permitted Radial Load	[N]	*7	7000	7000	7000	7000	7000	7000	7000
Permitted Axial Load	[N]	*8	6300	6300	6300	6300	6300	6300	6300
Maximum Radial Load	[N]	*9	7000						
Maximum Axial Load	[N]	*10	6300						
Moment of Inertia (≤Ø 14)	[kgcm2]	--	0.370	0.280	0.280	0.280	0.280	0.270	0.270
Moment of Inertia (≤ Ø 19)	[kgcm2]	--	0.800	0.730	0.730	0.730	0.730	0.730	0.730
Moment of Inertia (≤ Ø 28)	[kgcm2]	--	2.700	2.700	2.700	2.700	2.700	2.700	2.700
Moment of Inertia (≤ Ø 38)	[kgcm2]	--	--	--	--	--	--	--	--
Efficiency	[%]	*11	90						
Torsional Rigidity	[Nm/arc-min]	*12	31						
Maximum Torsional Backlash	[arc-min]	--	≤ 3						
Noise Level	[dB]	*13	71						
Protection Class	--	*14	IP54 (IP65)						
Ambient Temperature	[°C]	--	0-40						
Permitted Housing Temperature	[°C]	--	90						
Weight	[kg]	*15	8.8						

*1) At nominal input speed, service life is 20,000 hours
*2) The maximum torque when starting or stopping operation
*3) The maximum torque allowed under a stress situation (Permitted 1,000 times during service life)
*4) The average input speed
*5) The maximum intermittent input speed
*6) This is the torque at no load applied on the input shaft. The input speed is 3,000 rpm for VRS100
*7) At this load and nominal input speed, service life will be 20,000 hours. (The radial load applied to the output side bearing)
*8) At this load and nominal input speed, service life will be 20,000 hours. (The axial load applied to the output shaft center)
*9) The maximum radial load that the reducer can accept
*10) The maximum axial load that the reducer can accept
*11) The efficiency at the nominal torque rating
*12) This does not include the lost motion
*13) Contact NIDEC-SHIMPO for the testing conditions and environment
*14) IP65 (wash-down) is available as an option. Contact NIDEC-SHIMPO for more details and our food grade options
*15) The weight may vary slightly between models

VRS-100 – 1-Stage Dimensions

Input shaft bore ≦φ19

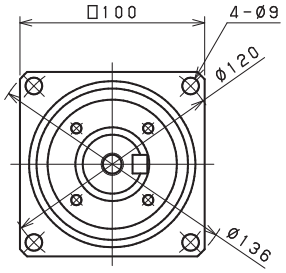

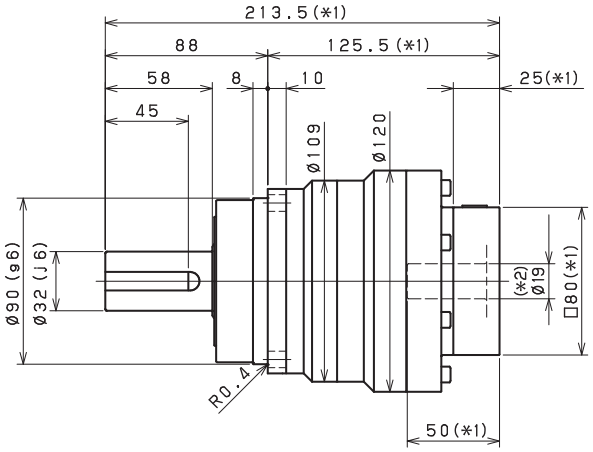

Input shaft bore ≦φ28

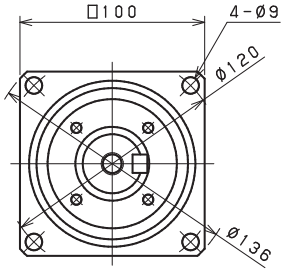

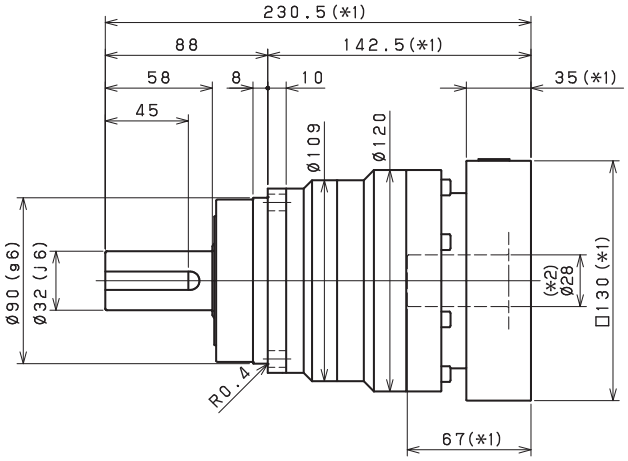

Input shaft bore ≦φ38

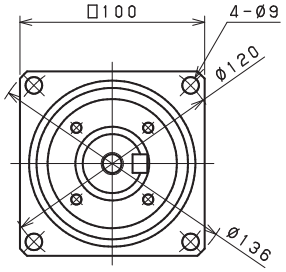

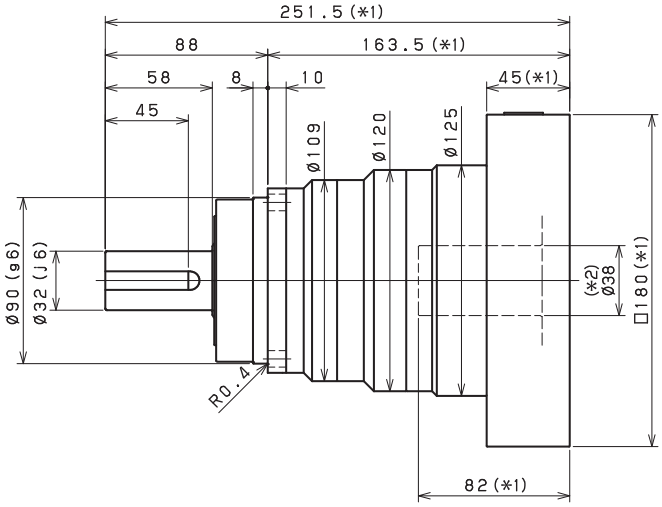

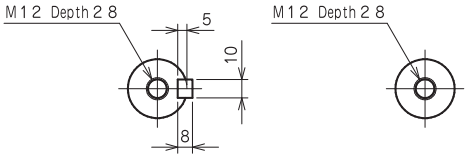

Shaft with key　　Smooth shaft

*1) Length will vary depending on motor

*2) Bushing will be inserted to adapt to motor shaft

VRS-100 – 2-Stage Dimensions

Input shaft bore ≦φ14

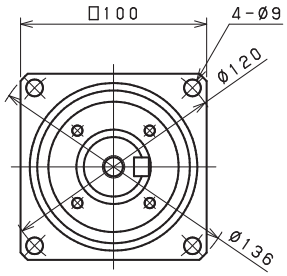

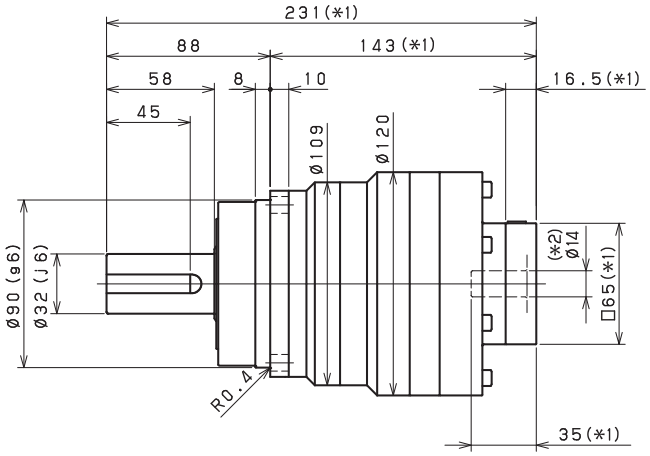

Input shaft bore ≦φ19

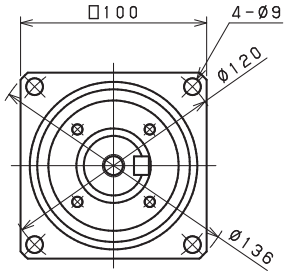

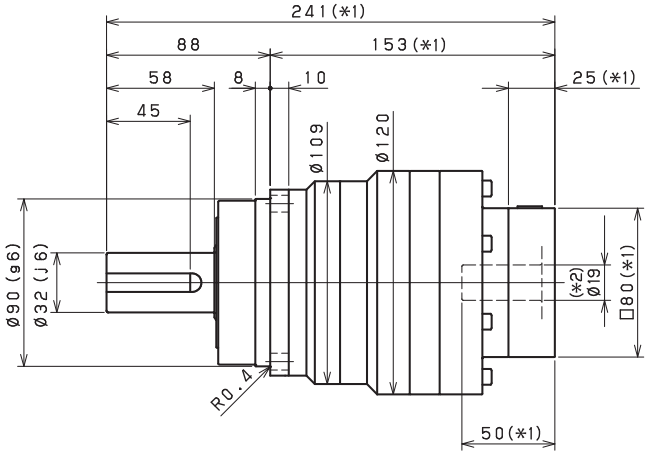

Input shaft bore ≦φ28

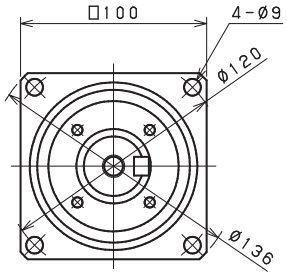

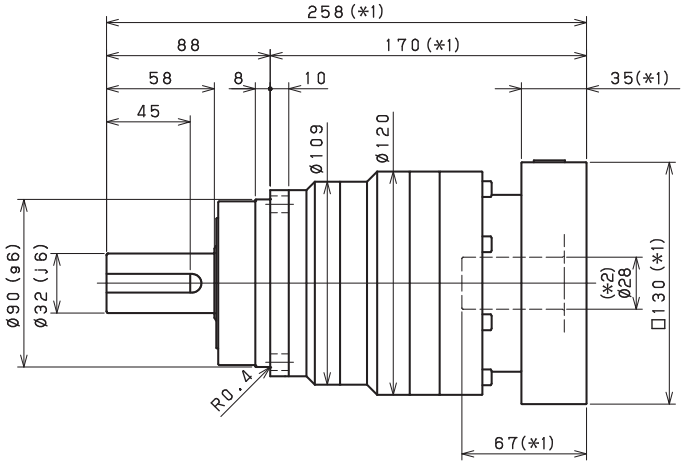

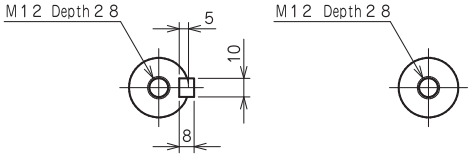

Shaft with key　　Smooth shaft

*1) Length will vary depending on motor

*2) Bushing will be inserted to adapt to motor shaft

VRS

VRS-100 – 1-Stage Adapter Dimensions

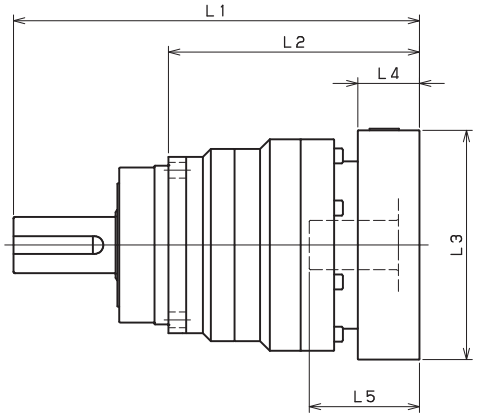

Model number	**: Adapter code	1-Stage					
		L1	L*	L2	L3	L4	L5
VRS-100-□-□-14** (Input shaft bore ≦ φ14)	BA•BB•BD•BE•BF•BG•BH•BJ•BK•BP	--	--	--	--	--	--
	BC•BH•BM•BN	--	--	--	--	--	--
	CA•CC	--	--	--	--	--	--
	DA•DB•DC•DD•DF•DH•DJ	--	--	--	--	--	--
	EA•EB•EC•EF•EG•EK•EL	--	--	--	--	--	--
	FA	--	--	--	--	--	--
	FB	--	--	--	--	--	--
	JA	--	--	--	--	--	--
VRS-100-□-□-19** (Input shaft bore ≦ φ19)	DA•DB•DC	213.5	188.5	125.5	□80	25	50
	EB	213.5	188.5	125.5	□90	25	50
	FA	213.5	188.5	125.5	□100	25	50
	FB	223.5	188.5	135.5	□100	35	60
	GB•GD	213.5	188.5	125.5	□115	25	50
	HA	223.5	188.5	135.5	□115	35	60
	--	213.5	188.5	125.5	□130	25	50
	--	228.5	188.5	140.5	□130	40	65
	--	218.5	188.5	130.5	□130	30	55
	HB	223.5	188.5	135.5	□150	35	60
VRS-100-□-□-28** (Input shaft bore ≦ φ28)	FA•FB•FC	230.5	195.5	142.5	□100	35	67
	GA•GB•GC•GD•GE•GF•GG•GH	230.5	195.5	142.5	□115	35	67
	HA•HC•HD	230.5	195.5	142.5	□130	35	67
	HB	240.5	195.5	152.5	□130	45	77
	HF	225.5	195.5	137.5	□130	30	62
	JA•JB•JC•JF	230.5	195.5	142.5	□150	35	67
	JD	250.5	195.5	162.5	□150	55	87
	JE	240.5	195.5	152.5	□150	45	77
	KA•KB•KE	230.5	195.5	142.5	□180	35	67
	KD	240.5	195.5	152.5	□180	45	77
VRS-100-□-□-38** (Input shaft bore ≦ φ38)	HA	251.5	206.5	163.5	□130	45	82
	HB•HE	246.5	206.5	158.5	□130	40	77
	JA	251.5	206.5	163.5	□150	45	82
	KA•KB•KC	251.5	206.5	163.5	□180	45	82
	KD	286.5	206.5	198.5	□180	80	117
	KE	266.5	206.5	178.5	□180	60	97

*1) Single reduction : 1/3~ 1/10 *2) Bushing will be inserted to adapt to motor shaft

For an explanation on the Adapter Flange Code, please turn to page 422.

A more comprehensive adapter flange offering can be found using the NIDEC-SHIMPO Online Selector Tool. The variety is constantly expanding and being updated on the Selector Tool. If you have any questions or need any support, contact NIDEC-SHIMPO.

VRS-100 – 2-Stage Adapter Dimensions

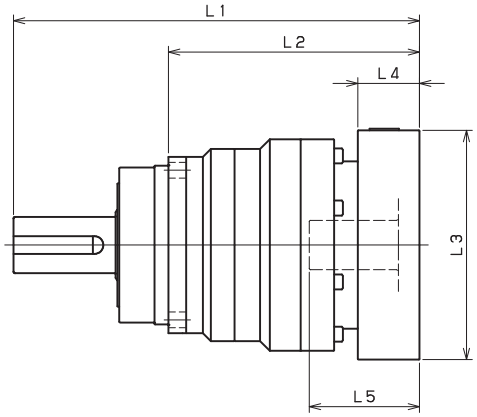

Model number	**: Adapter code	2-Stage					
		L1	L*	L2	L3	L4	L5
VRS-100-□-□-14** (Input shaft bore ≦ φ14)	BA•BB•BD•BE•BF•BG•BH•BJ•BK•BP	231	214.5	143	□65	16.5	35
	BC•BH•BM•BN	236	214.5	148	□65	21.5	40
	CA•CC	231	214.5	143	□70	16.5	35
	DA•DB•DC•DD•DF•DH•DJ	231	214.5	143	□80	16.5	35
	EA•EB•EC•EF•EG•EK•EL	231	214.5	143	□90	16.5	35
	FA	231	214.5	143	□100	16.5	35
	FB	241	214.5	153	□100	26.5	45
	JA	246	214.5	158	□150	31.5	50
VRS-100-□-□-19** (Input shaft bore ≦ φ19)	DA•DB•DC	241	216	153	□80	25	50
	EB	241	216	153	□90	25	50
	FA	241	216	153	□100	25	50
	FB	251	216	163	□100	35	60
	GB•GD	241	216	153	□115	25	50
	HA	251	216	163	□115	35	60
	--	241	216	153	□130	25	50
	--	256	216	168	□130	40	65
	--	246	216	158	□130	30	55
	HB	251	216	163	□150	35	60
VRS-100-□-□-28** (Input shaft bore ≦ φ28)	FA•FB•FC	258	223	170	□100	35	67
	GA•GB•GC•GD•GE•GF•GG•GH	258	223	170	□115	35	67
	HA•HC•HD	258	223	170	□130	35	67
	HB	268	223	180	□130	45	77
	HF	253	223	165	□130	30	62
	JA•JB•JC•JF	258	223	170	□150	35	67
	JD	278	223	190	□150	55	87
	JE	268	223	180	□150	45	77
	KA•KB•KE	258	223	170	□180	35	67
	KD	268	223	180	□180	45	77
VRS-100-□-□-38** (Input shaft bore ≦ φ38)	HA	275.5	230.5	187.5	□130	45	82
	HB•HE	270.5	230.5	182.5	□130	40	77
	JA	275.5	230.5	187.5	□150	45	82
	KA•KB•KC	275.5	230.5	187.5	□180	45	82
	KD	310.5	230.5	222.5	□180	80	117
	KE	290.5	230.5	202.5	□180	60	97

*1) Double reduction : 1/15~ 1/100 *2) Bushing will be inserted to adapt to motor shaft

For an explanation on the Adapter Flange Code, please turn to page 422.

A more comprehensive adapter flange offering can be found using the NIDEC-SHIMPO Online Selector Tool. The variety is constantly expanding and being updated on the Selector Tool. If you have any questions or need any support, contact NIDEC-SHIMPO.

VRS-140 – 1-Stage Specifications

Frame Size	**140**									
Stage	**1-Stage**									
Ratio	Unit	Note	3	4	5	6	7	8	9	10
Nominal Output Torque	[Nm]	*1	240	240	360	360	360	360	240	240
Maximum Acceleration Torque	[Nm]	*2	470	700	700	700	700	700	470	470
Emergency Stop Torque	[Nm]	*3	1000	1250	1250	1250	1250	1250	1000	1000
Nominal Input Speed	[rpm]	*4	2000							
Maximum Input Speed	[rpm]	*5	4000							
No Load Running Torque	[Nm]	*6	1.63							
Permitted Radial Load	[N]	*7	6700	7400	7900	8300	8700	9100	9400	9700
Permitted Axial Load	[N]	*8	9000	9000	9000	9000	9000	9000	9000	9000
Maximum Radial Load	[N]	*9	10000							
Maximum Axial Load	[N]	*10	9000							
Moment of Inertia (≤Ø 19)	[kgcm2]	--	--	--	--	--	--	--	--	--
Moment of Inertia (≤ Ø 28)	[kgcm2]	--	12.000	7.400	5.800	4.900	4.100	3.800	3.600	3.400
Moment of Inertia (≤ Ø 38)	[kgcm2]	--	20.000	15.000	13.000	13.000	12.000	12.000	11.000	11.000
Moment of Inertia (≤ Ø 48)	[kgcm2]	--	42.000	37.000	36.000	35.000	34.000	34.000	34.000	33.000
Efficiency	[%]	*11	95							
Torsional Rigidity	[Nm/arc-min]	*12	60							
Maximum Torsional Backlash	[arc-min]	--	≤ 3							
Noise Level	[dB]	*13	67							
Protection Class	--	*14	IP54 (IP65)							
Ambient Temperature	[°C]	--	0-40							
Permitted Housing Temperature	[°C]	--	90							
Weight	[kg]	*15	17							

VRS-140 – 2-Stage Specifications

Frame Size	**140**									
Stage	**2-Stage**									
Ratio	Unit	Note	15	16	20	25	28	30	35	40
Nominal Output Torque	[Nm]	*1	240	360	360	360	360	240	360	360
Maximum Acceleration Torque	[Nm]	*2	470	700	700	700	700	470	700	700
Emergency Stop Torque	[Nm]	*3	1000	1250	1250	1250	1250	1000	1250	1250
Nominal Input Speed	[rpm]	*4	2000							
Maximum Input Speed	[rpm]	*5	4000							
No Load Running Torque	[Nm]	*6	0.56							
Permitted Radial Load	[N]	*7	10000	10000	10000	10000	10000	10000	10000	10000
Permitted Axial Load	[N]	*8	9000	9000	9000	9000	9000	9000	9000	9000
Maximum Radial Load	[N]	*9	10000							
Maximum Axial Load	[N]	*10	9000							
Moment of Inertia (≤Ø 19)	[kgcm2]	--	1.300	1.500	1.200	1.100	1.400	0.850	1.100	0.830
Moment of Inertia (≤ Ø 28)	[kgcm2]	--	3.200	3.500	3.100	3.100	3.300	2.800	3.100	2.800
Moment of Inertia (≤ Ø 38)	[kgcm2]	--	11.000	11.000	11.000	11.000	11.000	10.000	11.000	10.000
Moment of Inertia (≤ Ø 48)	[kgcm2]	--	--	--	--	--	--	--	--	--
Efficiency	[%]	*11	90							
Torsional Rigidity	[Nm/arc-min]	*12	60							
Maximum Torsional Backlash	[arc-min]	--	≤ 3							
Noise Level	[dB]	*13	67							
Protection Class	--	*14	IP54 (IP65)							
Ambient Temperature	[°C]	--	0-40							
Permitted Housing Temperature	[°C]	--	90							
Weight	[kg]	*15	19							

VRS-140 – 2-Stage Specifications

Frame Size	**140**								
Stage	**2-Stage**								
Ratio	Unit	Note	45	50	60	70	80	90	100
Nominal Output Torque	[Nm]	*1	240	360	360	360	360	240	240
Maximum Acceleration Torque	[Nm]	*2	470	700	700	700	700	470	470
Emergency Stop Torque	[Nm]	*3	1000	1250	1250	1250	1250	1000	1000
Nominal Input Speed	[rpm]	*4	2000						
Maximum Input Speed	[rpm]	*5	4000						
No Load Running Torque	[Nm]	*6	0.56						
Permitted Radial Load	[N]	*7	10000	10000	10000	10000	10000	10000	10000
Permitted Axial Load	[N]	*8	9000	9000	9000	9000	9000	9000	9000
Maximum Radial Load	[N]	*9	10000						
Maximum Axial Load	[N]	*10	9000						
Moment of Inertia (≤Ø 19)	[kgcm2]	--	1.100	0.810	0.810	0.800	0.800	0.800	0.800
Moment of Inertia (≤ Ø 28)	[kgcm2]	--	3.000	2.800	2.800	2.800	2.800	2.800	2.800
Moment of Inertia (≤ Ø 38)	[kgcm2]	--	11.000	10.000	10.000	10.000	10.000	10.000	10.000
Moment of Inertia (≤ Ø 48)	[kgcm2]	--	--	--	--	--	--	--	--
Efficiency	[%]	*11	90						
Torsional Rigidity	[Nm/arc-min]	*12	60						
Maximum Torsional Backlash	[arc-min]	--	≤ 3						
Noise Level	[dB]	*13	67						
Protection Class	--	*14	IP54 (IP65)						
Ambient Temperature	[°C]	--	0-40						
Permitted Housing Temperature	[°C]	--	90						
Weight	[kg]	*15	19						

*1) At nominal input speed, service life is 20,000 hours
*2) The maximum torque when starting or stopping operation
*3) The maximum torque allowed under a stress situation (Permitted 1,000 times during service life)
*4) The average input speed
*5) The maximum intermittent input speed
*6) This is the torque at no load applied on the input shaft. The input speed is 2,000 rpm for VRS140
*7) At this load and nominal input speed, service life will be 20,000 hours. (The radial load applied to the output side bearing)
*8) At this load and nominal input speed, service life will be 20,000 hours. (The axial load applied to the output shaft center)
*9) The maximum radial load that the reducer can accept
*10) The maximum axial load that the reducer can accept
*11) The efficiency at the nominal torque rating
*12) This does not include the lost motion
*13) Contact NIDEC-SHIMPO for the testing conditions and environment
*14) IP65 (wash-down) is available as an option. Contact NIDEC-SHIMPO for more details and our food grade options
*15) The weight may vary slightly between models

VRS-140 – 1-Stage Dimensions

Input shaft bore ≦φ28

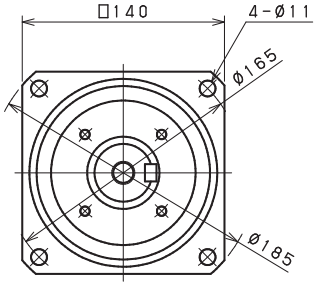

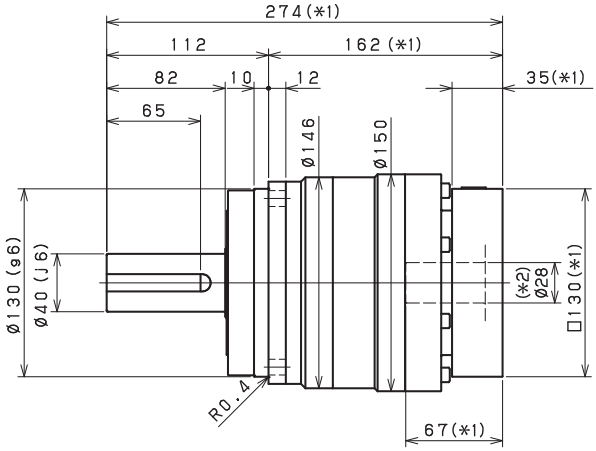

Input shaft bore ≦φ38

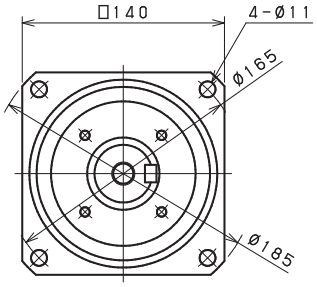

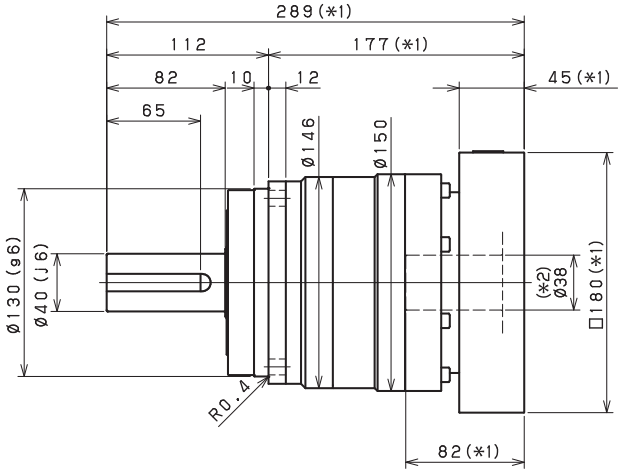

Input shaft bore ≦φ48

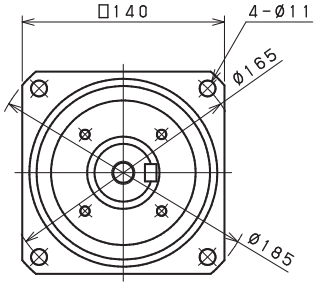

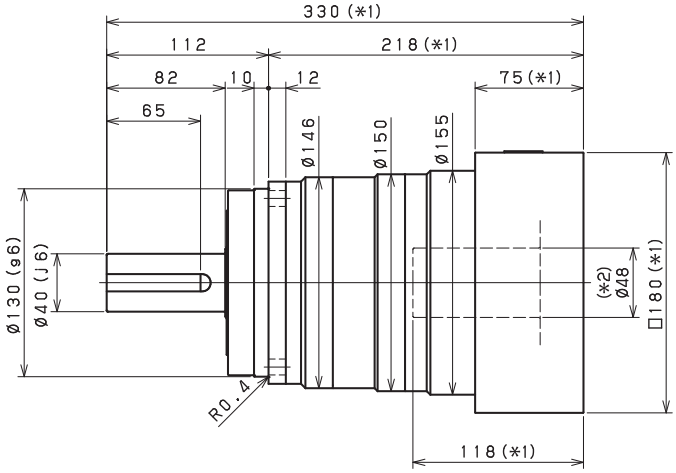

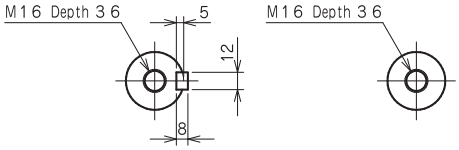

Shaft with key　　Smooth shaft

*1) Length will vary depending on motor

*2) Bushing will be inserted to adapt to motor shaft

VRS-140 – 2-Stage Dimensions

Input shaft bore ≦φ19

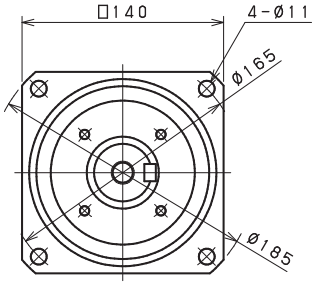

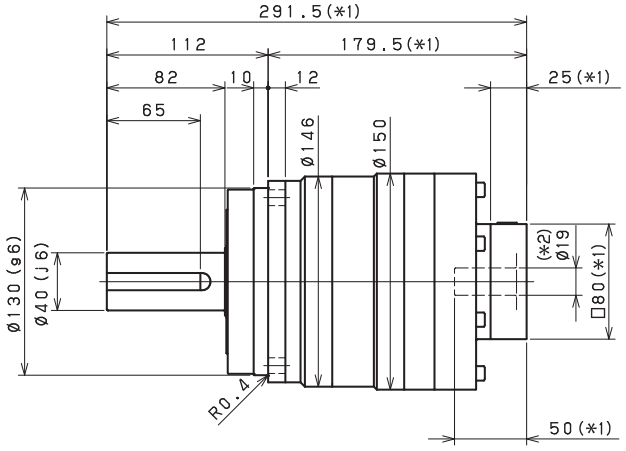

Input shaft bore ≦φ28

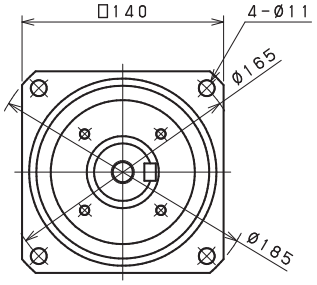

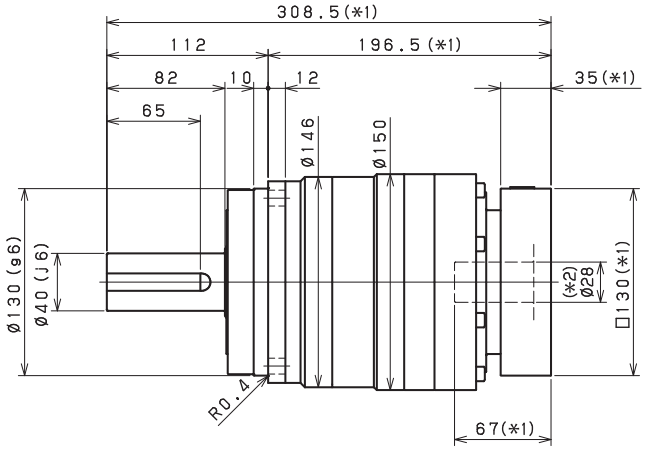

Input shaft bore ≦φ38

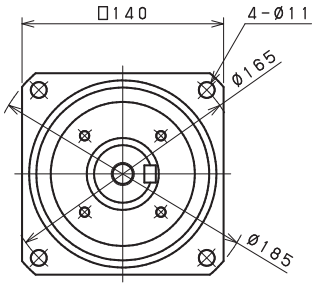

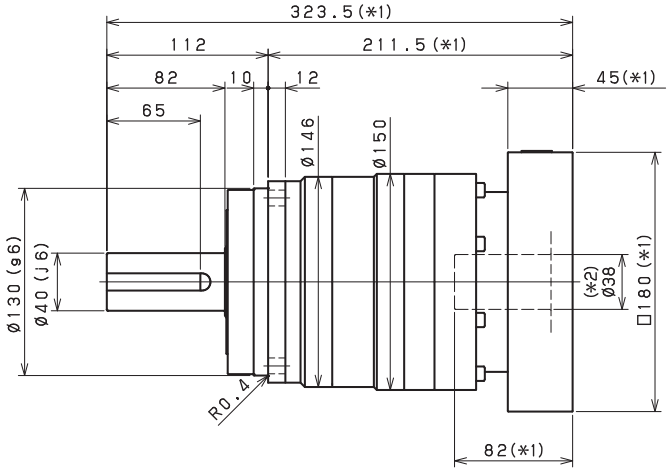

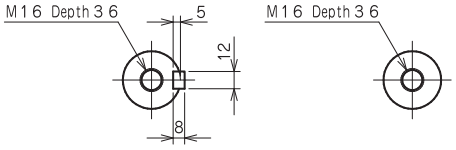

Shaft with key　　Smooth shaft

*1) Length will vary depending on motor

*2) Bushing will be inserted to adapt to motor shaft

VRS-140 – 1-Stage Adapter Dimensions

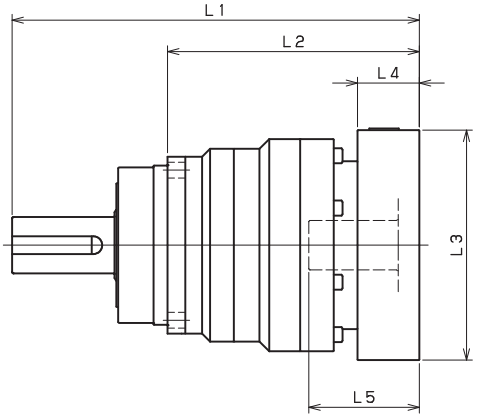

Model number	**: Adapter code	1-Stage					
		L1	L*	L2	L3	L4	L5
VRS-140-□-□-19** (Input shaft bore ≦ φ19)	DA•DB•DC	--	--	--	--	--	--
	EB•ED	--	--	--	--	--	--
	FA	--	--	--	--	--	--
	FB	--	--	--	--	--	--
	GB•GD•GJ	--	--	--	--	--	--
	HA	--	--	--	--	--	--
	HB	--	--	--	--	--	--
	JA	--	--	--	--	--	--
VRS-140-□-□-28** (Input shaft bore ≦ φ28)	FA•FB•FC	274	239	162	□100	35	67
	GA•GB•GC•GD•GE•GF•GG•GH	274	239	162	□115	35	67
	HA•HC•HD	274	239	162	□130	35	67
	HB	284	239	172	□130	45	77
	HF	269	239	157	□130	30	62
	JA•JB•JC•JF	274	239	162	□150	35	67
	KA•KB•KE	274	239	162	□180	35	67
	LA	274	239	162	□200	35	67
	LB	284	239	172	□200	45	77
	MA	274	239	162	□220	35	67
	MB	284	239	172	□220	45	77
VRS-140-□-□-38** (Input shaft bore ≦ φ38)	HA	289	244	177	□130	45	82
	HB•HE	284	244	172	□130	40	77
	JA	289	244	177	□150	45	82
	KA•KB•KC	289	244	177	□180	45	82
	KD	324	244	212	□180	80	117
	KE	304	244	192	□180	60	97
	LB	299	244	187	□200	55	92
	MA•MB	289	244	177	□220	45	82
	MC	304	244	192	□220	60	97
	MD	299	244	187	□220	55	92
VRS-140-□-□-48** (Input shaft bore ≦ φ48)	KA	330	255	218	□180	75	118
	KB•KC	310	255	198	□180	55	98
	LA	310	255	198	□200	55	98
	MA	310	255	198	□220	55	98
	MB	330	255	218	□220	75	118

*1) Single reduction : 1/3~ 1/10 *2) Bushing will be inserted to adapt to motor shaft

For an explanation on the Adapter Flange Code, please turn to page 422.

A more comprehensive adapter flange offering can be found using the NIDEC-SHIMPO Online Selector Tool. The variety is constantly expanding and being updated on the Selector Tool. If you have any questions or need any support, contact NIDEC-SHIMPO.

VRS-140 – 2-Stage Adapter Dimensions

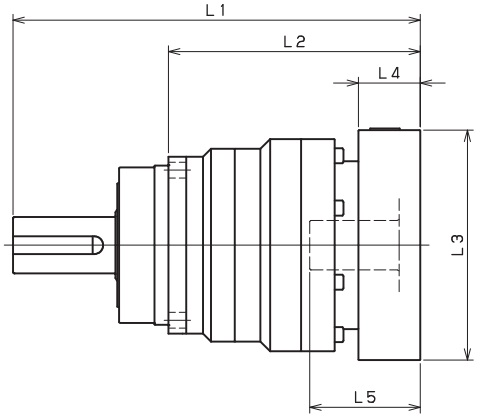

Model number	**: Adapter code	2-Stage					
		L1	L*	L2	L3	L4	L5
VRS-140-□-□-19** (Input shaft bore ≦ φ19)	DA•DB•DC	291.5	266.5	179.5	□80	25	50
	EB•ED	291.5	266.5	179.5	□90	25	50
	FA	291.5	266.5	179.5	□100	25	50
	FB	301.5	266.5	189.5	□100	35	60
	GB•GD•GJ	291.5	266.5	179.5	□115	25	50
	HA	291.5	266.5	179.5	□130	25	50
	HB	306.5	266.5	194.5	□130	40	65
	JA	301.5	266.5	189.5	□150	35	60
VRS-140-□-□-28** (Input shaft bore ≦ φ28)	FA•FB•FC	308.5	273.5	196.5	□100	35	67
	GA•GB•GC•GD•GE•GF•GG•GH	308.5	273.5	196.5	□115	35	67
	HA•HC•HD	308.5	273.5	196.5	□130	35	67
	HB	318.5	273.5	206.5	□130	45	77
	HF	303.5	273.5	191.5	□130	30	62
	JA•JB•JC•JF	308.5	273.5	196.5	□150	35	67
	KA•KB•KE	308.5	273.5	196.5	□180	35	67
	LA	308.5	273.5	196.5	□200	35	67
	LB	318.5	273.5	206.5	□200	45	77
	MA	308.5	273.5	196.5	□220	35	67
	MB	318.5	273.5	206.5	□220	45	77
VRS-140-□-□-38** (Input shaft bore ≦ φ38)	HA	323.5	278.5	211.5	□130	45	82
	HB•HE	318.5	278.5	206.5	□130	40	77
	JA	323.5	278.5	211.5	□150	45	82
	KA•KB•KC	323.5	278.5	211.5	□180	45	82
	KD	358.5	278.5	246.5	□180	80	117
	KE	338.5	278.5	226.5	□180	60	97
	LB	333.5	278.5	221.5	□200	55	92
	MA•MB	323.5	278.5	211.5	□220	45	82
	MC	338.5	278.5	226.5	□220	60	97
	MD	333.5	278.5	221.5	□220	55	92
VRS-140-□-□-48** (Input shaft bore ≦ φ48)	KA	364.5	289.5	252.5	□180	75	118
	KB•KC	344.5	289.5	232.5	□180	55	98
	LA	344.5	289.5	232.5	□200	55	98
	MA	344.5	289.5	232.5	□220	55	98
	MB	364.5	289.5	252.5	□220	75	118

*1) Double reduction : 1/15~ 1/100 *2) Bushing will be inserted to adapt to motor shaft

For an explanation on the Adapter Flange Code, please turn to page 422.

A more comprehensive adapter flange offering can be found using the NIDEC-SHIMPO Online Selector Tool. The variety is constantly expanding and being updated on the Selector Tool. If you have any questions or need any support, contact NIDEC-SHIMPO.

VRS-180 – 1-Stage Specifications

Frame Size	**180**									
Stage	**1-Stage**									
Ratio	Unit	Note	3	4	5	6	7	8	9	10
Nominal Output Torque	[Nm]	*1	500	750	750	750	750	750	500	500
Maximum Acceleration Torque	[Nm]	*2	970	1400	1400	1400	1400	1400	970	970
Emergency Stop Torque	[Nm]	*3	2200	2750	2750	2750	2750	2750	2200	2200
Nominal Input Speed	[rpm]	*4	1500							
Maximum Input Speed	[rpm]	*5	3000							
No Load Running Torque	[Nm]	*6	2.68							
Permitted Radial Load	[N]	*7	12000	13000	14000	15000	16000	17000	17000	18000
Permitted Axial Load	[N]	*8	16000	17000	17000	17000	17000	17000	17000	17000
Maximum Radial Load	[N]	*9	19000							
Maximum Axial Load	[N]	*10	17000							
Moment of Inertia (≤Ø 28)	[kgcm2]	--	--	--	--	--	--	--	--	--
Moment of Inertia (≤ Ø 38)	[kgcm2]	--	42.000	27.000	21.000	18.000	16.000	15.000	14.000	14.000
Moment of Inertia (≤ Ø 48)	[kgcm2]	--	64.000	49.000	43.000	40.000	38.000	37.000	36.000	36.000
Moment of Inertia (≤ Ø 65)	[kgcm2]	--	120.000	110.000	100.000	100.000	98.000	97.000	96.000	96.000
Efficiency	[%]	*11	95							
Torsional Rigidity	[Nm/arc-min]	*12	175							
Maximum Torsional Backlash	[arc-min]	--	≤ 3							
Noise Level	[dB]	*13	67							
Protection Class	--	*14	IP54 (IP65)							
Ambient Temperature	[°C]	--	0-40							
Permitted Housing Temperature	[°C]	--	90							
Weight	[kg]	*15	39							

VRS-180 – 2-Stage Specifications

Frame Size	**180**									
Stage	**2-Stage**									
Ratio	Unit	Note	15	16	20	25	28	30	35	40
Nominal Output Torque	[Nm]	*1	500	750	750	750	750	500	750	750
Maximum Acceleration Torque	[Nm]	*2	970	1400	1400	1400	1400	970	1400	1400
Emergency Stop Torque	[Nm]	*3	2200	2750	2750	2750	2750	2200	2750	2750
Nominal Input Speed	[rpm]	*4	1500							
Maximum Input Speed	[rpm]	*5	3000							
No Load Running Torque	[Nm]	*6	1.39							
Permitted Radial Load	[N]	*7	19000	19000	19000	19000	19000	19000	19000	19000
Permitted Axial Load	[N]	*8	17000	17000	17000	17000	17000	17000	17000	17000
Maximum Radial Load	[N]	*9	19000							
Maximum Axial Load	[N]	*10	17000							
Moment of Inertia (≤Ø 28)	[kgcm2]	--	4.700	5.400	4.300	4.200	4.900	3.200	4.100	3.200
Moment of Inertia (≤ Ø 38)	[kgcm2]	--	12.000	13.000	12.000	12.000	13.000	11.000	12.000	11.000
Moment of Inertia (≤ Ø 48)	[kgcm2]	--	34.000	35.000	34.000	34.000	35.000	33.000	34.000	33.000
Moment of Inertia (≤ Ø 65)	[kgcm2]	--	--	--	--	--	--	--	--	--
Efficiency	[%]	*11	90							
Torsional Rigidity	[Nm/arc-min]	*12	175							
Maximum Torsional Backlash	[arc-min]	--	≤ 3							
Noise Level	[dB]	*13	67							
Protection Class	--	*14	IP54 (IP65)							
Ambient Temperature	[°C]	--	0-40							
Permitted Housing Temperature	[°C]	--	90							
Weight	[kg]	*15	39							

VRS-180 – 2-Stage Specifications

Frame Size	180								
Stage	**2-Stage**								
Ratio	Unit	Note	45	50	60	70	80	90	100
Nominal Output Torque	[Nm]	*1	500	750	750	750	750	500	500
Maximum Acceleration Torque	[Nm]	*2	970	1400	1400	1400	1400	970	970
Emergency Stop Torque	[Nm]	*3	2200	2750	2750	2750	2750	2200	2200
Nominal Input Speed	[rpm]	*4	1500						
Maximum Input Speed	[rpm]	*5	3000						
No Load Running Torque	[Nm]	*6	1.39						
Permitted Radial Load	[N]	*7	19000	19000	19000	19000	19000	19000	19000
Permitted Axial Load	[N]	*8	17000	17000	17000	17000	17000	17000	17000
Maximum Radial Load	[N]	*9	19000						
Maximum Axial Load	[N]	*10	17000						
Moment of Inertia (≤Ø 28)	[kgcm2]	--	4.000	3.100	3.100	3.100	3.100	3.100	3.100
Moment of Inertia (≤ Ø 38)	[kgcm2]	--	12.000	11.000	11.000	11.000	11.000	11.000	11.000
Moment of Inertia (≤ Ø 48)	[kgcm2]	--	34.000	33.000	33.000	33.000	33.000	33.000	33.000
Moment of Inertia (≤ Ø 65)	[kgcm2]	--	--	--	--	--	--	--	--
Efficiency	[%]	*11	90						
Torsional Rigidity	[Nm/arc-min]	*12	175						
Maximum Torsional Backlash	[arc-min]	--	≤ 3						
Noise Level	[dB]	*13	67						
Protection Class	--	*14	IP54 (IP65)						
Ambient Temperature	[°C]	--	0-40						
Permitted Housing Temperature	[°C]	--	90						
Weight	[kg]	*15	39						

*1) At nominal input speed, service life is 20,000 hours
*2) The maximum torque when starting or stopping operation
*3) The maximum torque allowed under a stress situation (Permitted 1,000 times during service life)
*4) The average input speed
*5) The maximum intermittent input speed
*6) This is the torque at no load applied on the input shaft. The input speed is 1,5000 rpm for VRS180
*7) At this load and nominal input speed, service life will be 20,000 hours. (The radial load applied to the output side bearing)
*8) At this load and nominal input speed, service life will be 20,000 hours. (The axial load applied to the output shaft center)
*9) The maximum radial load that the reducer can accept
*10) The maximum axial load that the reducer can accept
*11) The efficiency at the nominal torque rating
*12) This does not include the lost motion
*13) Contact NIDEC-SHIMPO for the testing conditions and environment
*14) IP65 (wash-down) is available as an option. Contact NIDEC-SHIMPO for more details and our food grade options
*15) The weight may vary slightly between models

VRS-180 – 1-Stage Dimensions

Input shaft bore ≦φ38

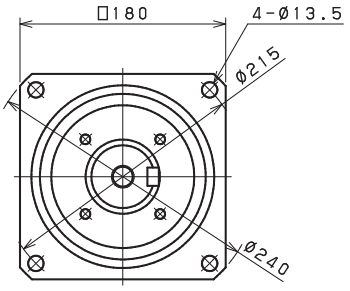

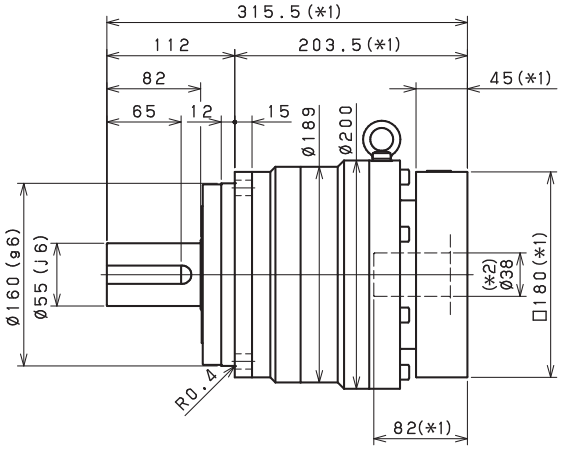

Input shaft bore ≦φ48

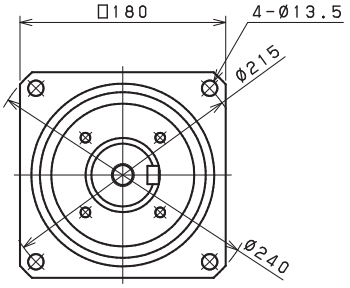

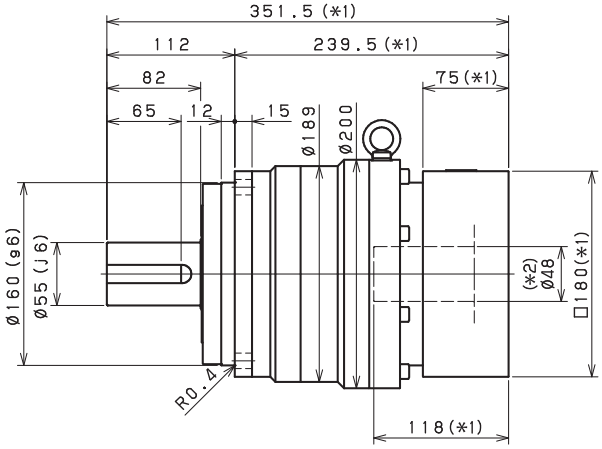

Input shaft bore ≦φ65

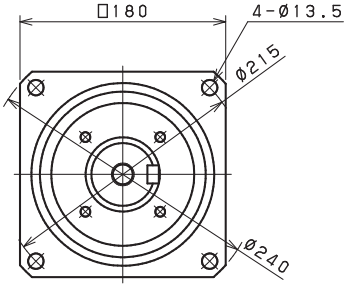

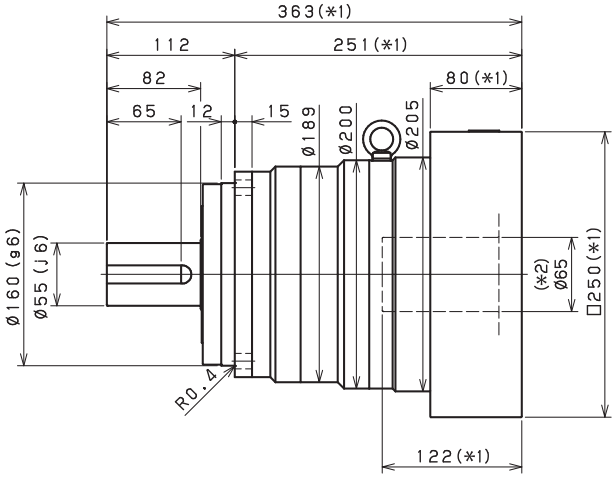

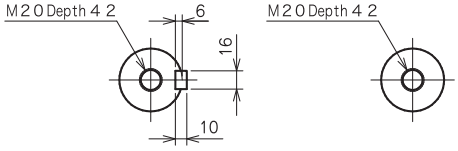

Shaft with key　　Smooth shaft

*1) Length will vary depending on motor

*2) Bushing will be inserted to adapt to motor shaft

VRS-180 – 2-Stage Dimensions

Input shaft bore ≦φ28

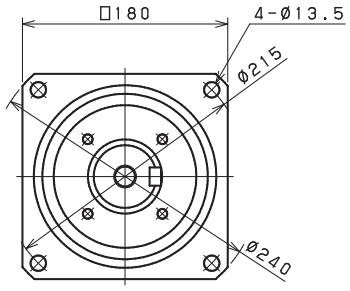

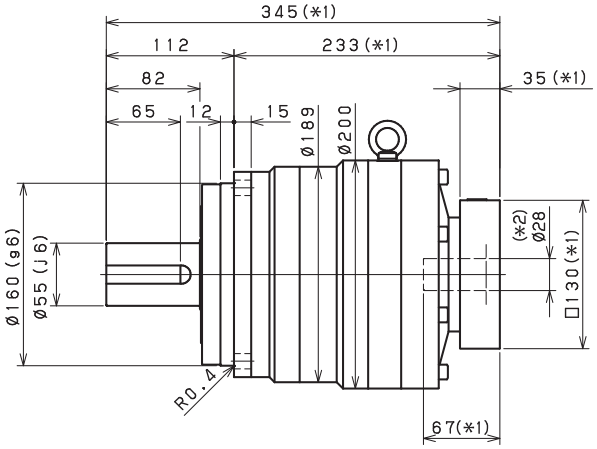

Input shaft bore ≦φ38

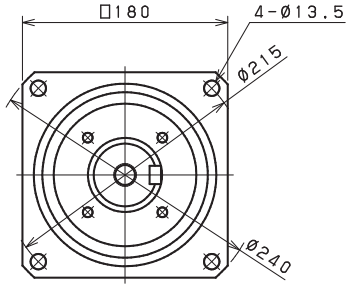

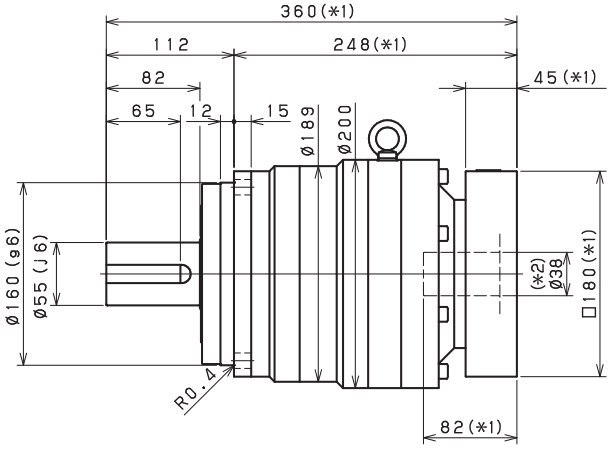

Input shaft bore ≦φ48

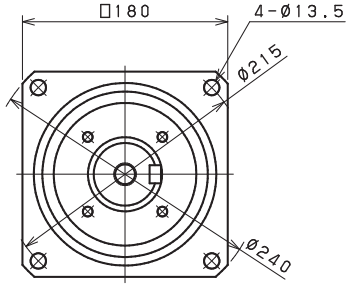

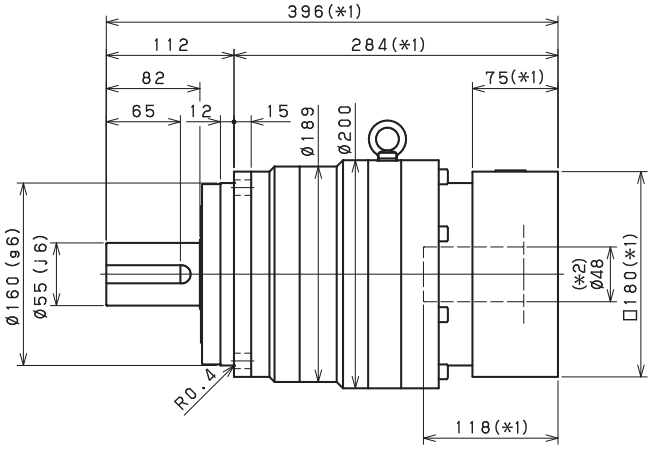

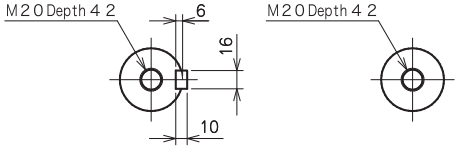

Shaft with key

Smooth shaft

*1) Length will vary depending on motor

*2) Bushing will be inserted to adapt to motor shaft

VRS-180 – 1-Stage Adapter Dimensions

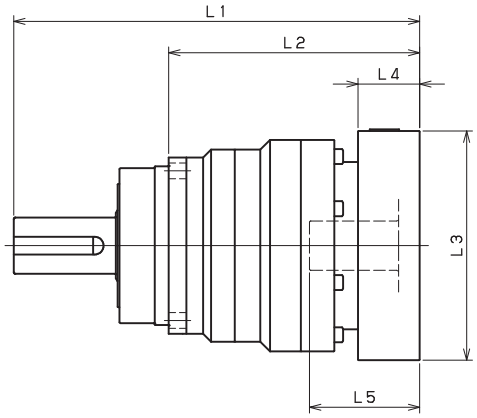

Model number	**: Adapter code	1-Stage					
		L1	L*	L2	L3	L4	L5
VRS-180-□-□-28** (Input shaft bore ≦ φ28)	FA•FB•FC	--	--	--	--	--	--
	GA•GB•GC•GD•GE•GF•GG•GH	--	--	--	--	--	--
	HA•HC•HD	--	--	--	--	--	--
	HB	--	--	--	--	--	--
	HF	--	--	--	--	--	--
	JA•JB•JC•JF	--	--	--	--	--	--
	KA•KB•KE	--	--	--	--	--	--
	LA	--	--	--	--	--	--
	LB	--	--	--	--	--	--
	MA	--	--	--	--	--	--
	MB	--	--	--	--	--	--
VRS-180-□-□-38** (Input shaft bore ≦ φ38)	HA	315.5	270.5	203.5	□130	45	82
	HB•HE	310.5	270.5	198.5	□130	40	77
	JA	315.5	270.5	203.5	□150	45	82
	KA•KB•KC	315.5	270.5	203.5	□180	45	82
	KD	350.5	270.5	238.5	□180	80	117
	KE	330.5	270.5	218.5	□180	60	97
	LB	325.5	270.5	213.5	□200	55	92
	MA•MB	315.5	270.5	203.5	□220	45	82
	MC	330.5	270.5	218.5	□220	60	97
	MD	325.5	270.5	213.5	□220	55	92
	NA	315.5	270.5	203.5	□250	45	82
VRS-180-□-□-48** (Input shaft bore ≦ φ48)	KA	351.5	276.5	239.5	□180	75	118
	KB•KC	331.5	276.5	219.5	□180	55	98
	LA	331.5	276.5	219.5	□200	55	98
	MA	331.5	276.5	219.5	□220	55	98
	MB	351.5	276.5	239.5	□220	75	118
	NA	351.5	276.5	239.5	□250	75	118
	PA	351.5	276.5	239.5	□280	75	118
VRS-180-□-□-65** (Input shaft bore ≦ φ65)	MA•MB•MC•MD	363	283	251	□220	80	122
	NA•NC	363	283	251	□250	80	122
	NB•ND	393	283	281	□250	110	152
	PA	383	283	271	□280	100	142
	PB	393	283	281	□280	110	152

*1) Single reduction : 1/3~ 1/10 *2) Bushing will be inserted to adapt to motor shaft

For an explanation on the Adapter Flange Code, please turn to page 422.

A more comprehensive adapter flange offering can be found using the NIDEC-SHIMPO Online Selector Tool. The variety is constantly expanding and being updated on the Selector Tool. If you have any questions or need any support, contact NIDEC-SHIMPO.

VRS-180 – 2-Stage Adapter Dimensions

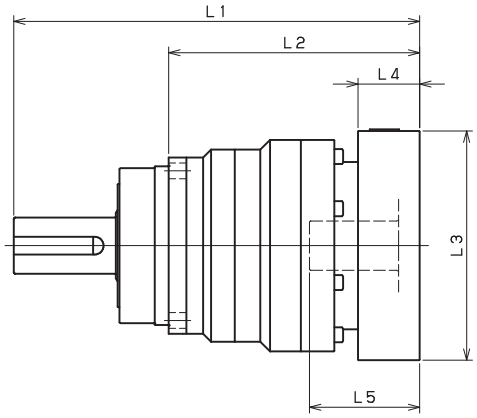

Model number	**: Adapter code	2-Stage					
		L1	L*	L2	L3	L4	L5
VRS-180-□-□-28** (Input shaft bore ≦ φ28)	FA•FB•FC	345	310	233	□100	35	67
	GA•GB•GC•GD•GE•GF•GG•GH	345	310	233	□115	35	67
	HA•HC•HD	345	310	233	□130	35	67
	HB	355	310	243	□130	45	77
	HF	340	310	228	□130	30	62
	JA•JB•JC•JF	345	310	233	□150	35	67
	KA•KB•KE	345	310	233	□180	35	67
	LA	345	310	233	□200	35	67
	LB	355	310	243	□200	45	77
	MA	345	310	233	□220	35	67
	MB	355	310	243	□220	45	77
VRS-180-□-□-38** (Input shaft bore ≦ φ38)	HA	360	315	248	□130	45	82
	HB•HE	355	315	243	□130	40	77
	JA	360	315	248	□150	45	82
	KA•KB•KC	360	315	248	□180	45	82
	KD	395	315	283	□180	80	117
	KE	375	315	263	□180	60	97
	LB	370	315	258	□200	55	92
	MA•MB	360	315	248	□220	45	82
	MC	375	315	263	□220	60	97
	MD	370	315	258	□220	55	92
	NA	360	315	248	□250	45	82
VRS-180-□-□-48** (Input shaft bore ≦ φ48)	KA	396	321	284	□180	75	118
	KB•KC	376	321	264	□180	55	98
	LA	376	321	264	□200	55	98
	MA	376	321	264	□220	55	98
	MB	396	321	284	□220	75	118
	NA	396	321	284	□250	75	118
	PA	396	321	284	□280	75	118
VRS-180-□-□-65** (Input shaft bore ≦ φ65)	MA•MB•MC•MD	--	--	--	--	--	--
	NA•NC	--	--	--	--	--	--
	NB•ND	--	--	--	--	--	--
	PA	--	--	--	--	--	--
	PB	--	--	--	--	--	--

*1) Double reduction : 1/15~ 1/100 *2) Bushing will be inserted to adapt to motor shaft

For an explanation on the Adapter Flange Code, please turn to page 422.

A more comprehensive adapter flange offering can be found using the NIDEC-SHIMPO Online Selector Tool. The variety is constantly expanding and being updated on the Selector Tool. If you have any questions or need any support, contact NIDEC-SHIMPO.

VRS-210 – 1-Stage Specifications

Frame Size	**210**									
Stage	**1-Stage**									
Ratio	Unit	Note	3	4	5	6	7	8	9	10
Nominal Output Torque	[Nm]	*1	1000	1500	1500	1500	1500	1500	1000	1000
Maximum Acceleration Torque	[Nm]	*2	1600	2300	2300	2300	2300	2200	1900	1600
Emergency Stop Torque	[Nm]	*3	4000	5000	5000	5000	5000	5000	4000	4000
Nominal Input Speed	[rpm]	*4	1000							
Maximum Input Speed	[rpm]	*5	2000							
No Load Running Torque	[Nm]	*6	2.92							
Permitted Radial Load	[N]	*7	17000	18000	20000	21000	22000	23000	24000	24000
Permitted Axial Load	[N]	*8	22000	22000	22000	22000	22000	22000	22000	22000
Maximum Radial Load	[N]	*9	24000							
Maximum Axial Load	[N]	*10	22000							
Moment of Inertia (≤Ø 38)	[kgcm2]	--	--	--	--	--	--	--	--	--
Moment of Inertia (≤ Ø 48)	[kgcm2]	--	92.000	63.000	53.000	47.000	43.000	40.000	39.000	38.000
Moment of Inertia (≤ Ø 65)	[kgcm2]	--	150.000	120.000	110.000	110.000	100.000	100.000	99.000	98.000
Efficiency	[%]	*11	97							
Torsional Rigidity	[Nm/arc-min]	*12	400							
Maximum Torsional Backlash	[arc-min]	--	≤ 3							
Noise Level	[dB]	*13	61							
Protection Class	--	*14	IP54 (IP65)							
Ambient Temperature	[°C]	--	0-40							
Permitted Housing Temperature	[°C]	--	90							
Weight	[kg]	*15	59							

VRS-210 – 2-Stage Specifications

Frame Size	**210**									
Stage	**2-Stage**									
Ratio	Unit	Note	15	16	20	25	28	30	35	40
Nominal Output Torque	[Nm]	*1	1000	1500	1500	1500	1500	1000	1500	1500
Maximum Acceleration Torque	[Nm]	*2	1600	2300	2300	2300	2300	1600	2300	2300
Emergency Stop Torque	[Nm]	*3	4000	5000	5000	5000	5000	4000	5000	5000
Nominal Input Speed	[rpm]	*4	1000							
Maximum Input Speed	[rpm]	*5	2000							
No Load Running Torque	[Nm]	*6	1.14							
Permitted Radial Load	[N]	*7	24000	24000	24000	24000	24000	24000	24000	24000
Permitted Axial Load	[N]	*8	22000	22000	22000	22000	22000	22000	22000	22000
Maximum Radial Load	[N]	*9	24000							
Maximum Axial Load	[N]	*10	22000							
Moment of Inertia (≤Ø 38)	[kgcm2]	--	14.000	16.000	14.000	14.000	15.000	12.000	13.000	12.000
Moment of Inertia (≤ Ø 48)	[kgcm2]	--	36.000	37.000	36.000	35.000	36.000	34.000	35.000	33.000
Moment of Inertia (≤ Ø 65)	[kgcm2]	--	--	--	--	--	--	--	--	--
Efficiency	[%]	*11	92							
Torsional Rigidity	[Nm/arc-min]	*12	400							
Maximum Torsional Backlash	[arc-min]	--	≤ 3							
Noise Level	[dB]	*13	61							
Protection Class	--	*14	IP54 (IP65)							
Ambient Temperature	[°C]	--	0-40							
Permitted Housing Temperature	[°C]	--	90							
Weight	[kg]	*15	60							

VRS-210 – 2-Stage Specifications

Frame Size	210								
Stage	**2-Stage**								
Ratio	Unit	Note	45	50	60	70	80	90	100
Nominal Output Torque	[Nm]	*1	1000	1500	1500	1500	1500	1000	1000
Maximum Acceleration Torque	[Nm]	*2	1300	2300	2300	2300	1800	1300	1200
Emergency Stop Torque	[Nm]	*3	4000	5000	5000	5000	5000	4000	4000
Nominal Input Speed	[rpm]	*4	1000						
Maximum Input Speed	[rpm]	*5	2000						
No Load Running Torque	[Nm]	*6	1.14						
Permitted Radial Load	[N]	*7	24000	24000	24000	24000	24000	24000	24000
Permitted Axial Load	[N]	*8	22000	22000	22000	22000	22000	22000	22000
Maximum Radial Load	[N]	*9	24000						
Maximum Axial Load	[N]	*10	22000						
Moment of Inertia (≤Ø 38)	[kgcm2]	--	13.000	12.000	12.000	12.000	12.000	12.000	12.000
Moment of Inertia (≤ Ø 48)	[kgcm2]	--	35.000	33.000	33.000	33.000	33.000	33.000	33.000
Moment of Inertia (≤ Ø 65)	[kgcm2]	--	--	--	--	--	--	--	--
Efficiency	[%]	*11	92						
Torsional Rigidity	[Nm/arc-min]	*12	400						
Maximum Torsional Backlash	[arc-min]	--	≤ 3						
Noise Level	[dB]	*13	61						
Protection Class	--	*14	IP54 (IP65)						
Ambient Temperature	[°C]	--	0-40						
Permitted Housing Temperature	[°C]	--	90						
Weight	[kg]	*15	60						

*1) At nominal input speed, service life is 20,000 hours
*2) The maximum torque when starting or stopping operation
*3) The maximum torque allowed under a stress situation (Permitted 1,000 times during service life)
*4) The average input speed
*5) The maximum intermittent input speed
*6) This is the torque at no load applied on the input shaft. The input speed is 1,5000 rpm for VRS210;
*7) At this load and nominal input speed, service life will be 20,000 hours. (The radial load applied to the output side bearing)
*8) At this load and nominal input speed, service life will be 20,000 hours. (The axial load applied to the output shaft center)
*9) The maximum radial load that the reducer can accept
*10) The maximum axial load that the reducer can accept
*11) The efficiency at the nominal torque rating
*12) This does not include the lost motion
*13) Contact NIDEC-SHIMPO for the testing conditions and environment
*14) IP65 (wash-down) is available as an option. Contact NIDEC-SHIMPO for more details and our food grade options
*15) The weight may vary slightly between models

VRS-210 – 1-Stage Dimensions

Input shaft bore ≦φ48

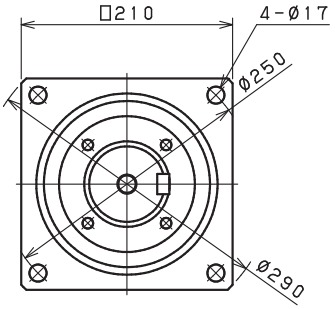

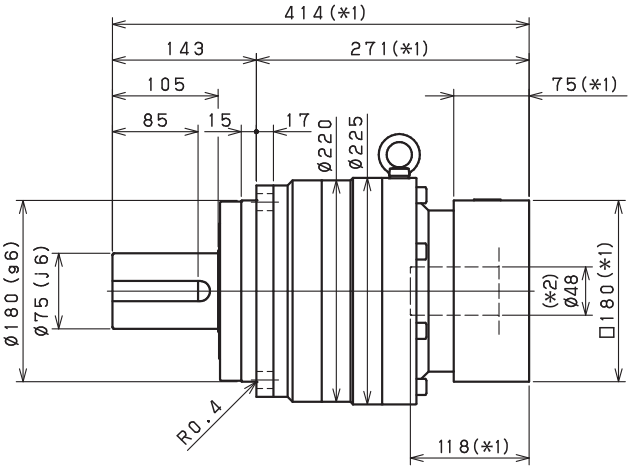

Input shaft bore ≦φ65

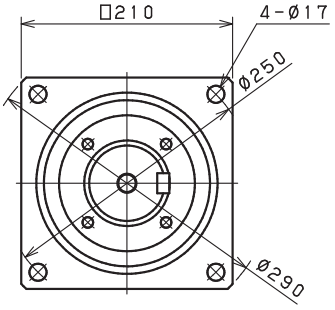

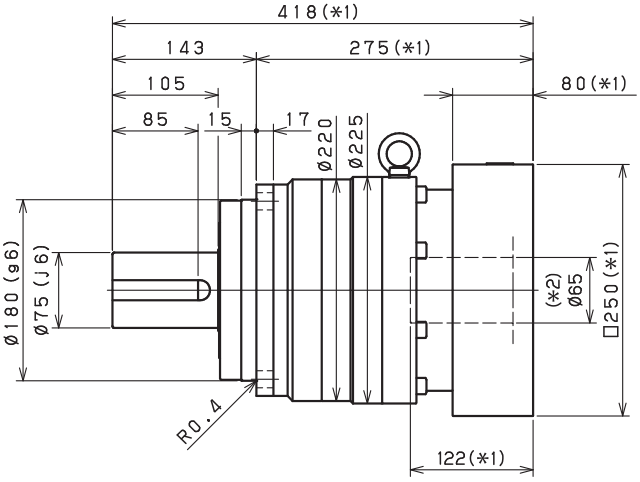

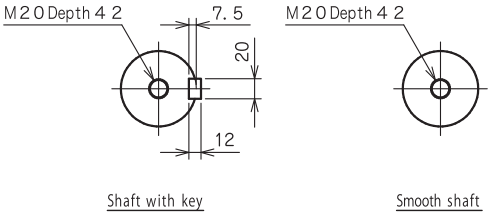

*1) Length will vary depending on motor.

*2) Bushing will be inserted to adapt to motor shaft

VRS-210 – 2-Stage Dimensions

Input shaft bore ≦φ38

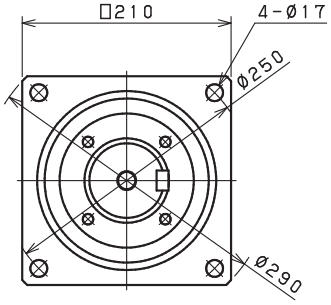

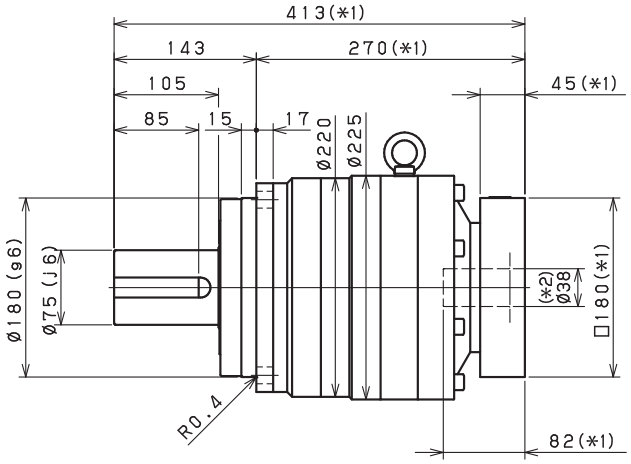

Input shaft bore ≦φ48

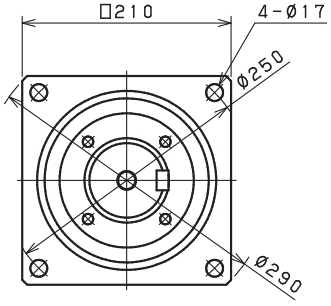

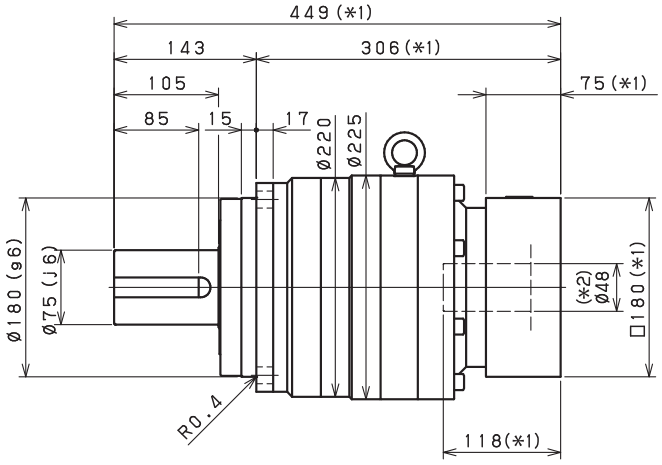

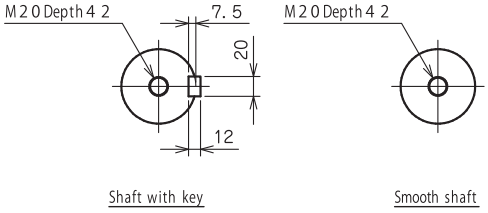

*1) Length will vary depending on motor.

*2) Bushing will be inserted to adapt to motor shaft

VRS

VRS-210 – 1-Stage Adapter Dimensions

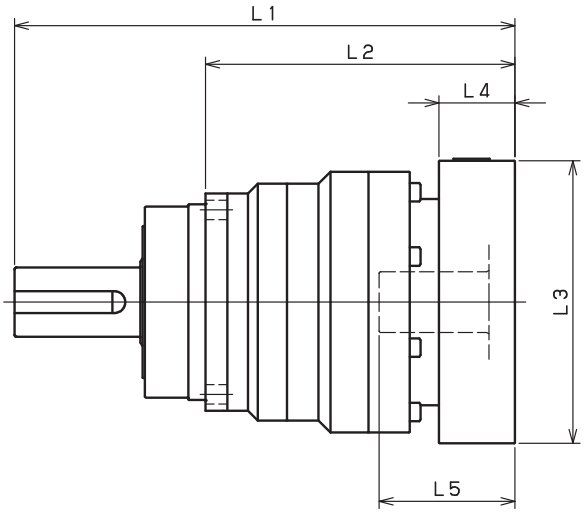

Model number	**: Adapter code	1-Stage					
		L1	L*	L2	L3	L4	L5
VRS-210-□-□-38** (Input shaft bore ≦ φ38)	HA	--	--	--	--	--	--
	HB•HE	--	--	--	--	--	--
	JA	--	--	--	--	--	--
	KA•KB•KC	--	--	--	--	--	--
	KD	--	--	--	--	--	--
	KE	--	--	--	--	--	--
	LA	--	--	--	--	--	--
	LB	--	--	--	--	--	--
	MA•MB	--	--	--	--	--	--
	MC	--	--	--	--	--	--
	MD	--	--	--	--	--	--
	NA	--	--	--	--	--	--
VRS-210-□-□-48** (Input shaft bore ≦ φ48)	KA	414	339	271	□180	75	118
	KB•KC	394	339	251	□180	55	98
	LA	394	339	251	□200	55	98
	MA	394	339	251	□220	55	98
	MB	414	339	271	□220	75	118
	NA	414	339	271	□250	75	118
	PA	414	339	271	□280	75	118
VRS-210-□-□-65** (Input shaft bore ≦ φ65)	MA•MB•MC•MD	418	338	275	□220	80	122
	NA•NC	418	338	275	□250	80	122
	NB•ND	448	338	305	□250	110	152
	PA	438	338	295	□280	100	142
	PB	448	338	305	□280	110	152
	QA•QB	438	338	295	□320	100	142

*1) Single reduction : 1/3~ 1/10

*2) Bushing will be inserted to adapt to motor shaft

For an explanation on the Adapter Flange Code, please turn to page 422.

A more comprehensive adapter flange offering can be found using the NIDEC-SHIMPO Online Selector Tool. The variety is constantly expanding and being updated on the Selector Tool. If you have any questions or need any support, contact NIDEC-SHIMPO.

VRS-210 – 2-Stage Adapter Dimensions

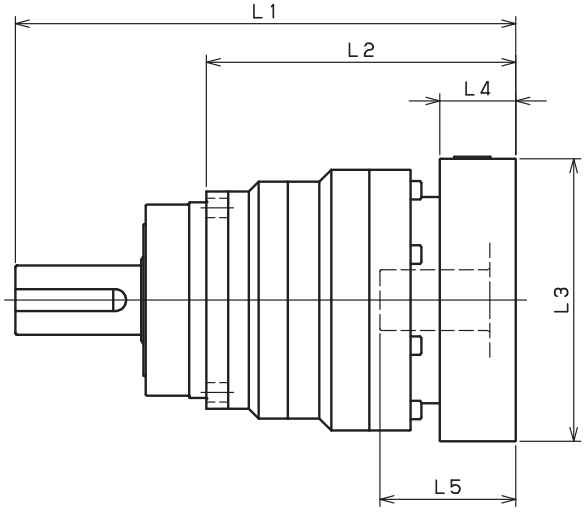

Model number	**: Adapter code	2-Stage					
		L1	L*	L2	L3	L4	L5
VRS-210-□-□-38** (Input shaft bore ≦ φ38)	HA	413	368	270	□130	45	82
	HB•HE	408	368	265	□130	40	77
	JA	413	368	270	□150	45	82
	KA•KB•KC	413	368	270	□180	45	82
	KD	448	368	305	□180	80	117
	KE	428	368	285	□180	60	97
	LA	413	368	270	□200	45	82
	LB	423	368	280	□200	55	92
	MA•MB	413	368	270	□220	45	82
	MC	428	368	285	□220	60	97
	MD	423	368	280	□220	55	92
	NA	413	368	270	□250	45	82
VRS-210-□-□-48** (Input shaft bore ≦ φ48)	KA	449	374	306	□180	75	118
	KB•KC	429	374	286	□180	55	98
	LA	429	374	286	□200	55	98
	MA	429	374	286	□220	55	98
	MB	449	374	306	□220	75	118
	NA	449	374	306	□250	75	118
	PA	449	374	306	□280	75	118
VRS-210-□-□-65** (Input shaft bore ≦ φ65)	MA•MB•MC•MD	--	--	--	--	--	--
	NA•NC	--	--	--	--	--	--
	NB•ND	--	--	--	--	--	--
	PA	--	--	--	--	--	--
	PB	--	--	--	--	--	--
	QA•QB	--	--	--	--	--	--

*1) Double reduction : 1/15~ 1/100

*2) Bushing will be inserted to adapt to motor shaft

For an explanation on the Adapter Flange Code, please turn to page 422.

A more comprehensive adapter flange offering can be found using the NIDEC-SHIMPO Online Selector Tool. The variety is constantly expanding and being updated on the Selector Tool. If you have any questions or need any support, contact NIDEC-SHIMPO.

VRS-240 – 1-Stage Specifications

Frame Size	**240**									
Stage	**1-Stage**									
Ratio	Unit	Note	3	4	5	6	7	8	9	10
Nominal Output Torque	[Nm]	*1	1600	2400	2400	2400	2400	2400	1600	1600
Maximum Acceleration Torque	[Nm]	*2	2500	3700	3700	3700	3700	3600	3000	2600
Emergency Stop Torque	[Nm]	*3	6000	8000	8000	8000	8000	8000	6000	6000
Nominal Input Speed	[rpm]	*4	1000							
Maximum Input Speed	[rpm]	*5	2000							
No Load Running Torque	[Nm]	*6	5.96							
Permitted Radial Load	[N]	*7	21000	22000	24000	25000	26000	28000	29000	29000
Permitted Axial Load	[N]	*8	27000	27000	27000	27000	27000	27000	27000	27000
Maximum Radial Load	[N]	*9	30000							
Maximum Axial Load	[N]	*10	27000							
Moment of Inertia (≤Ø 48)	[kgcm2]	--	--	--	--	--	--	--	--	--
Moment of Inertia (≤ Ø 65)	[kgcm2]	--	220.000	160.000	130.000	120.000	110.000	110.000	110.000	100.000
Efficiency	[%]	*11	97							
Torsional Rigidity	[Nm/arc-min]	*12	550							
Maximum Torsional Backlash	[arc-min]	--	≤ 3							
Noise Level	[dB]	*13	62							
Protection Class	--	*14	IP54 (IP65)							
Ambient Temperature	[°C]	--	0-40							
Permitted Housing Temperature	[°C]	--	90							
Weight	[kg]	*15	85							

VRS-240 – 2-Stage Specifications

Frame Size	**240**									
Stage	**2-Stage**									
Ratio	Unit	Note	15	16	20	25	28	30	35	40
Nominal Output Torque	[Nm]	*1	1600	2400	2400	2400	2400	1600	2400	2400
Maximum Acceleration Torque	[Nm]	*2	2500	3700	3700	3700	3700	2500	3700	3700
Emergency Stop Torque	[Nm]	*3	6000	8000	8000	8000	8000	6000	8000	8000
Nominal Input Speed	[rpm]	*4	1000							
Maximum Input Speed	[rpm]	*5	2000							
No Load Running Torque	[Nm]	*6	1.28							
Permitted Radial Load	[N]	*7	30000	30000	30000	30000	30000	30000	30000	30000
Permitted Axial Load	[N]	*8	27000	27000	27000	27000	27000	27000	27000	27000
Maximum Radial Load	[N]	*9	30000							
Maximum Axial Load	[N]	*10	27000							
Moment of Inertia (≤Ø 48)	[kgcm2]	--	40.000	43.000	39.000	39.000	41.000	35.000	38.000	35.000
Moment of Inertia (≤ Ø 65)	[kgcm2]	--	--	--	--	--	--	--	--	--
Efficiency	[%]	*11	92							
Torsional Rigidity	[Nm/arc-min]	*12	550							
Maximum Torsional Backlash	[arc-min]	--	≤ 3							
Noise Level	[dB]	*13	62							
Protection Class	--	*14	IP54 (IP65)							
Ambient Temperature	[°C]	--	0-40							
Permitted Housing Temperature	[°C]	--	90							
Weight	[kg]	*15	89							

VRS-240 – 2-Stage Specifications

Frame Size	**240**								
Stage	**2-Stage**								
Ratio	Unit	Note	45	50	60	70	80	90	100
Nominal Output Torque	[Nm]	*1	1600	2400	2400	2400	2400	1600	1600
Maximum Acceleration Torque	[Nm]	*2	2100	3700	3700	3700	2700	2100	1800
Emergency Stop Torque	[Nm]	*3	6000	8000	8000	8000	8000	6000	6000
Nominal Input Speed	[rpm]	*4	1000						
Maximum Input Speed	[rpm]	*5	2000						
No Load Running Torque	[Nm]	*6	1.28						
Permitted Radial Load	[N]	*7	30000	30000	30000	30000	30000	30000	30000
Permitted Axial Load	[N]	*8	27000	27000	27000	27000	27000	27000	27000
Maximum Radial Load	[N]	*9	30000						
Maximum Axial Load	[N]	*10	27000						
Moment of Inertia (≤Ø 48)	[kgcm2]	--	38.000	35.000	35.000	34.000	34.000	34.000	34.000
Moment of Inertia (≤ Ø 65)	[kgcm2]	--	--	--	--	--	--	--	--
Efficiency	[%]	*11	92						
Torsional Rigidity	[Nm/arc-min]	*12	550						
Maximum Torsional Backlash	[arc-min]	--	≤ 3						
Noise Level	[dB]	*13	62						
Protection Class	--	*14	IP54 (IP65)						
Ambient Temperature	[°C]	--	0-40						
Permitted Housing Temperature	[°C]	--	90						
Weight	[kg]	*15	89						

*1) At nominal input speed, service life is 20,000 hours
*2) The maximum torque when starting or stopping operation
*3) The maximum torque allowed under a stress situation (Permitted 1,000 times during service life)
*4) The average input speed
*5) The maximum intermittent input speed
*6) This is the torque at no load applied on the input shaft. The input speed is 1,000 rpm for VRS240
*7) At this load and nominal input speed, service life will be 20,000 hours. (The radial load applied to the output side bearing)
*8) At this load and nominal input speed, service life will be 20,000 hours. (The axial load applied to the output shaft center)
*9) The maximum radial load that the reducer can accept
*10) The maximum axial load that the reducer can accept
*11) The efficiency at the nominal torque rating
*12) This does not include the lost motion
*13) Contact NIDEC-SHIMPO for the testing conditions and environment
*14) IP65 (wash-down) is available as an option. Contact NIDEC-SHIMPO for more details and our food grade options
*15) The weight may vary slightly between models

VRS-240 – 1-Stage Dimensions

Input shaft bore ≦φ65

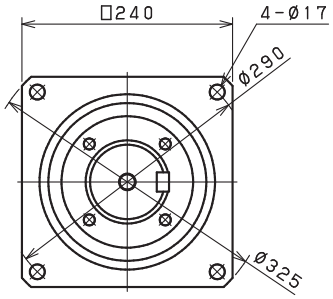

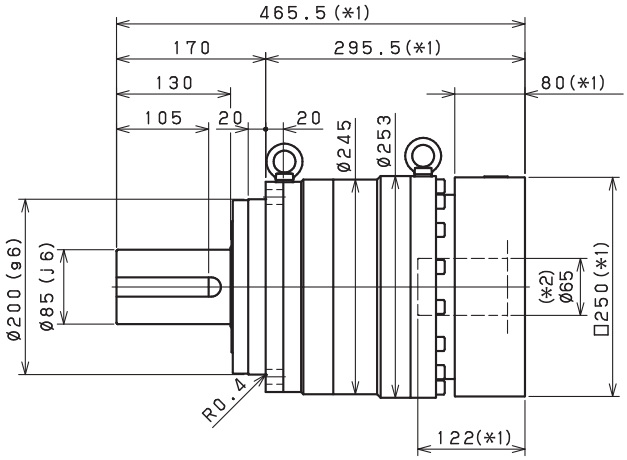

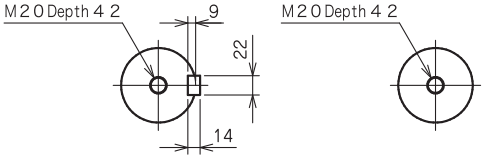

Shaft with key

Smooth shaft

*1) Length will vary depending on motor

*2) Bushing will be inserted to adapt to motor shaft

VRS-240 – 2-Stage Dimensions

Input shaft bore ≦φ48

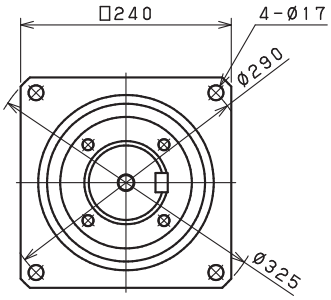

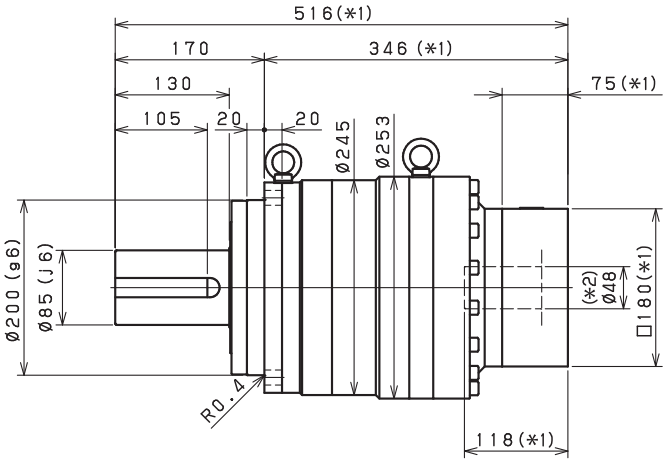

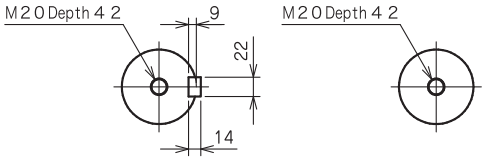

Shaft with key

Smooth shaft

*1) Length will vary depending on motor

*2) Bushing will be inserted to adapt to motor shaft

VRS

VRS-240 – 1-Stage Adapter Dimensions

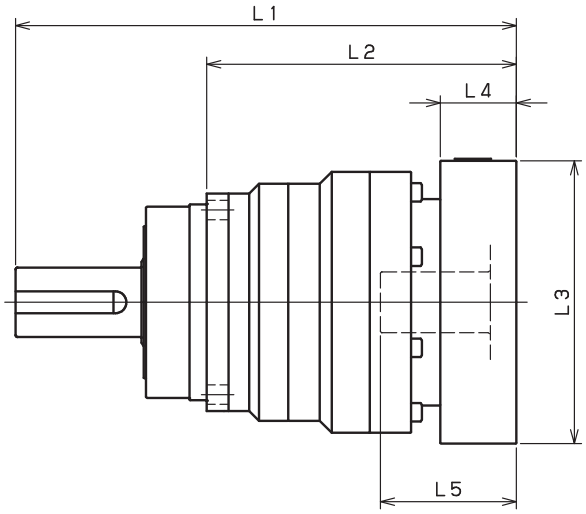

Model number	**: Adapter code	1-Stage					
		L1	L*	L2	L3	L4	L5
VRS-240-□-□-48** (Input shaft bore ≦ φ48)	KA	--	--	--	--	--	--
	KB•KC	--	--	--	--	--	--
	LA	--	--	--	--	--	--
	MA	--	--	--	--	--	--
	MB	--	--	--	--	--	--
	NA	--	--	--	--	--	--
	PA	--	--	--	--	--	--
VRS-240-□-□-65** (Input shaft bore ≦ φ65)	MA•MB•MC•MD	465.5	385.5	295.5	□220	80	122
	NA•NC	465.5	385.5	295.5	□250	80	122
	NB•ND	495.5	385.5	325.5	□250	110	152
	PA	485.5	385.5	315.5	□280	100	142
	PB	495.5	385.5	325.5	□280	110	152
	QA•QB	485.5	385.5	315.5	□320	100	142

*1) Single reduction : 1/3~ 1/10

*2) Bushing will be inserted to adapt to motor shaft

For an explanation on the Adapter Flange Code, please turn to page 422.

A more comprehensive adapter flange offering can be found using the NIDEC-SHIMPO Online Selector Tool. The variety is constantly expanding and being updated on the Selector Tool. If you have any questions or need any support, contact NIDEC-SHIMPO.

VRS-240 – 2-Stage Adapter Dimensions

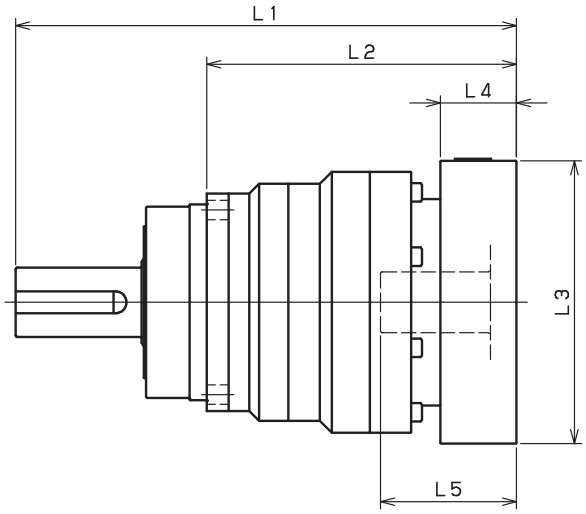

Model number	**: Adapter code	2-Stage					
		L1	L*	L2	L3	L4	L5
VRS-240-□-□-48** (Input shaft bore ≦ φ48)	KA	516	441	346	□180	75	118
	KB•KC	496	441	326	□180	55	98
	LA	496	441	326	□200	55	98
	MA	496	441	326	□220	55	98
	MB	516	441	346	□220	75	118
	NA	516	441	346	□250	75	118
	PA	516	441	346	□280	75	118
VRS-240-□-□-65** (Input shaft bore ≦ φ65)	MA•MB•MC•MD	--	--	--	--	--	--
	NA•NC	--	--	--	--	--	--
	NB•ND	--	--	--	--	--	--
	PA	--	--	--	--	--	--
	PB	--	--	--	--	--	--
	QA•QB	--	--	--	--	--	--

*1) Double reduction : 1/15~ 1/100

*2) Bushing will be inserted to adapt to motor shaft

For an explanation on the Adapter Flange Code, please turn to page 422.

A more comprehensive adapter flange offering can be found using the NIDEC-SHIMPO Online Selector Tool. The variety is constantly expanding and being updated on the Selector Tool. If you have any questions or need any support, contact NIDEC-SHIMPO.

VRT-SERIES

The VRT series sets the new standard in applications requiring extremely high-torque ratings and rigidity. The compact design and hub-style output is ideal for equipment requiring high speed, high precision indexing movement. The remarkable torsional stiffness and the low backlash of the planetary gearing combine to provide outstanding positioning accuracy.

With a backlash rating less than 3 arc-minutes and exceptional torque handling capabilities, the VRT offers a high performance robust planetary solution for OEM customers. The VRT reducer is often used for larger indexing applications and dial tables commonly found in packaging and filling equipment and assembly automation systems.

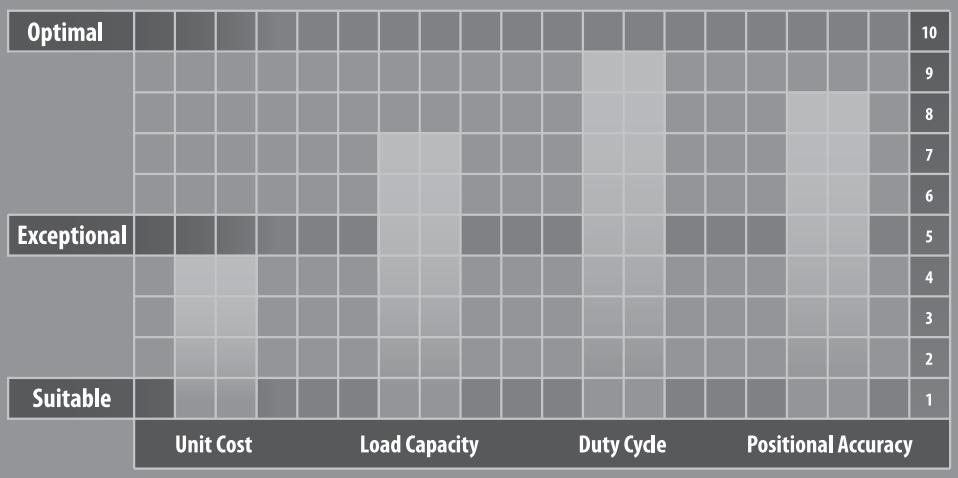

VRT

VRT-SERIES

- ISO9409 robotics industry mounting interface
- Superior flexibility in mounting of pinions, pulleys and turntables
- Exceptional torsional rigidity for high positional accuracy needs
- Nice compact and robust design
- Impressive radial and axial load capability

VRT-Series – Features

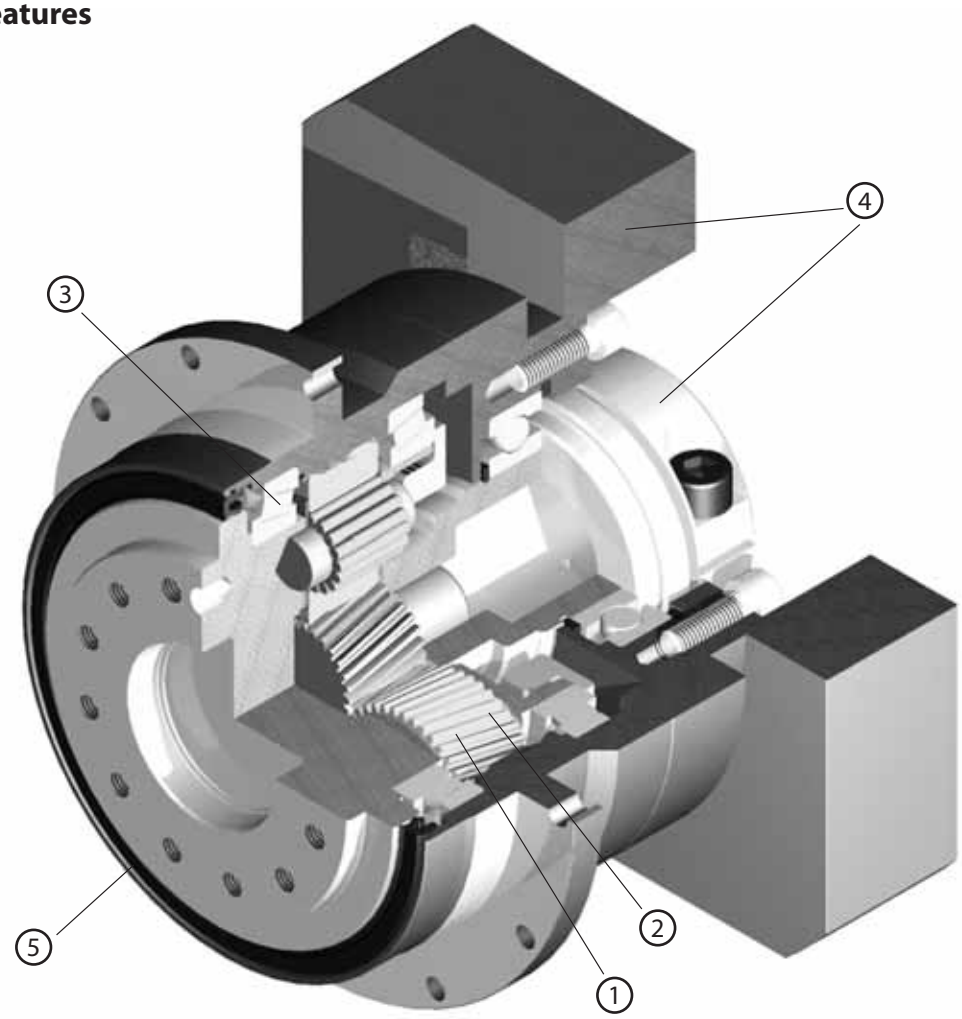

1. High precision: Standard backlash is 3 arc-min, ideal for higher levels of positional accuracy
2. High rigidity & torque: Rigidity and torque capacity are achieved by using uncaged needle roller bearings
3. High load capacity: Tapered roller bearings were added to the output section to increase radial and axial load ratings on most frame sizes
4. Adapter-bushing connection: Enables a simple, effective attachment to most servo motors
5. No leakage through the seal: High viscosity, anti-separation grease does not liquefy and does not migrate away from the gears
6. Maintenance-free: No need to replace the grease for the life of the unit. The reducer can be positioned in any orientation

VRT-Series – Model Code

VR	T	–	090	–	7	–	F	3	–	19HB16

- 19HB16: * Adapter flange code
- 3: Backlash 3・・・ 3arc-min
- F: Output style F・・・ Flange output
- 7: Ratio
  - Single: 4, 5, 7, 10
  - Double: 16, 20, 25, 28, 35, 40, 50, 70, 100
- 090: Frame size: 047, 064, 090, ***110B**, ***140B, *200B, *255B, *285B**
  - * Frames > 090 are a different generation of design, include letter B with frame size
- T: Series name VRT Series
- VR: Model name for ABLE reducer

*1) Adapter flange code
Adapter flange code varies depending on the motor.

Contact us for additional information or refer to our online reducer selection tool.

Selection tool www.nidec-shimpo.co.jp/selection/eng

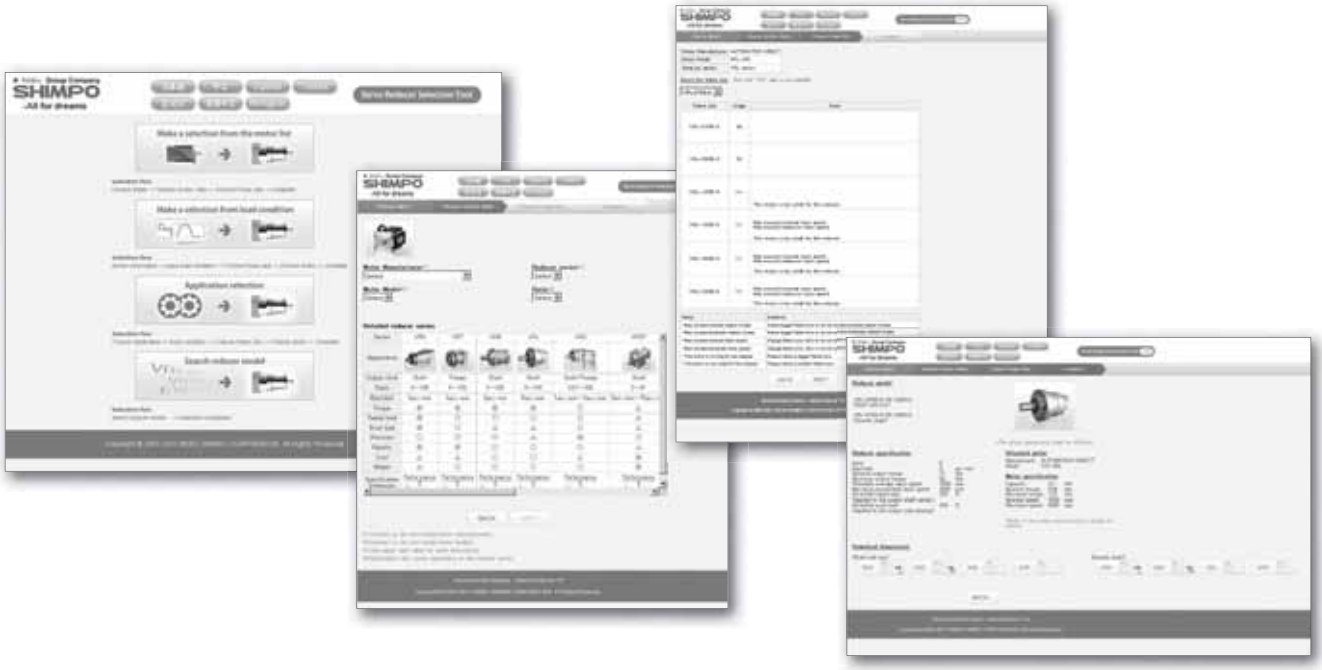

VRT-047 – 1-Stage Specifications

Frame Size	**047**								
Stage	**1-Stage**								
Ratio	Unit	Notes	4	5	6	7	8	9	10
Nominal Output Torque	[Nm]	*1	9	9	9	9	9	6	6
Maximum Acceleration Torque	[Nm]	*2	18	18	18	18	18	12	12
Emergency Stop Torque	[Nm]	*3	35	35	35	35	35	30	30
Nominal Input Speed	[rpm]	*4	4000						
Maximum Input Speed	[rpm]	*5	8000						
No Load Running Torque	[Nm]	*6	0.03						
Permitted Radial Load	[N]	*7	270	300	310	330	350	360	370
Permitted Axial Load	[N]	*8	300	330	360	390	410	430	450
Maximum Radial Load	[N]	*9	1100						
Maximum Axial Load	[N]	*10	550						
Moment of Inertia (≤ Ø 8)	[kgcm2]	--	0.052	0.043	0.038	0.036	0.034	0.033	0.032
Moment of Inertia (≤ Ø 14)	[kgcm2]	--	0.090	0.081	0.077	0.074	0.072	0.071	0.071
Efficiency	[%]	*11	95						
Torsional Rigidity	[Nm/arc-min]	*12	2						
Maximum Torsional Backlash	[arc-min]	--	≤ 3						
Noise Level	[dB]	*13	≤ 61						
Protection Class	--	*14	IP54 (IP65)						
Ambient Temperature	[°C]	--	0 - 40						
Permitted Housing Temperature	[°C]	--	90						
Weight	[kg]	*15	0.7						

VRT-047 – 2-Stage Specifications

Frame Size	**047**								
Stage	**2-Stage**								
Ratio	Unit	Notes	16	20	25	28	35	40	45
Nominal Output Torque	[Nm]	*1	9	9	9	9	9	9	6
Maximum Acceleration Torque	[Nm]	*2	18	18	18	18	18	18	12
Emergency Stop Torque	[Nm]	*3	35	35	35	35	35	35	30
Nominal Input Speed	[rpm]	*4	4000						
Maximum Input Speed	[rpm]	*5	8000						
No Load Running Torque	[Nm]	*6	0.01						
Permitted Radial Load	[N]	*7	440	470	510	530	570	590	620
Permitted Axial Load	[N]	*8	550	550	550	550	550	550	550
Maximum Radial Load	[N]	*9	1100						
Maximum Axial Load	[N]	*10	550						
Moment of Inertia (≤ Ø 8)	[kgcm2]	--	0.039	0.035	0.034	0.038	0.034	0.030	0.034
Moment of Inertia (≤ Ø 14)	[kgcm2]	--	--	--	--	--	--	--	--
Efficiency	[%]	*11	90						
Torsional Rigidity	[Nm/arc-min]	*12	2						
Maximum Torsional Backlash	[arc-min]	--	≤ 5						
Noise Level	[dB]	*13	≤ 61						
Protection Class	--	*14	IP54 (IP65)						
Ambient Temperature	[°C]	--	0 - 40						
Permitted Housing Temperature	[°C]	--	90						
Weight	[kg]	*15	0.8						

VRT-047 – 2-Stage Specifications

Frame Size	**047**							
Stage	**2-Stage**							
Ratio	Unit	Notes	50	60	70	80	90	100
Nominal Output Torque	[Nm]	*1	9	9	9	9	6	6
Maximum Acceleration Torque	[Nm]	*2	18	18	18	18	12	12
Emergency Stop Torque	[Nm]	*3	35	35	35	35	30	30
Nominal Input Speed	[rpm]	*4	4000					
Maximum Input Speed	[rpm]	*5	8000					
No Load Running Torque	[Nm]	*6	0.01					
Permitted Radial Load	[N]	*7	640	680	710	750	780	800
Permitted Axial Load	[N]	*8	550	550	550	550	550	550
Maximum Radial Load	[N]	*9	1100					
Maximum Axial Load	[N]	*10	550					
Moment of Inertia (≤ Ø 8)	[kgcm2]	--	0.030	0.030	0.030	0.030	0.030	0.030
Moment of Inertia (≤ Ø 14)	[kgcm2]	--	--	--	--	--	--	--
Efficiency	[%]	*11	90					
Torsional Rigidity	[Nm/arc-min]	*12	2					
Maximum Torsional Backlash	[arc-min]	--	≤ 5					
Noise Level	[dB]	*13	≤ 61					
Protection Class	--	*14	IP54 (IP65)					
Ambient Temperature	[°C]	--	0 - 40					
Permitted Housing Temperature	[°C]	--	90					
Weight	[kg]	*15	0.8					

*1) At nominal input speed, service life is 20,000 hours
*2) The maximum torque when starting or stopping operation
*3) The maximum torque allowed under a stress situation (Permitted 1,000 times during service life)
*4) The average input speed
*5) The maximum intermittent input speed
*6) This is the torque at no load applied on the input shaft. The input speed is 4,000 rpm for VRT 047
*7) At this load and nominal input speed, service life will be 20,000 hours. (The radial load applied to the output side bearing)
*8) At this load and nominal input speed, service life will be 20,000 hours. (The axial load applied to the output flange center)
*9) The maximum radial load that the reducer can accept
*10) The maximum axial load that the reducer can accept
*11) The efficiency at the nominal torque rating
*12) This does not include the lost motion
*13) Contact NIDEC-SHIMPO for the testing conditions and environment
*14) IP65 (wash-down) is available as an option. Contact NIDEC-SHIMPO for more details and our food grade options
*15) The weight may vary slightly between models

VRT-047 – 1-Stage Dimensions

Input shaft bore ≦ϕ8

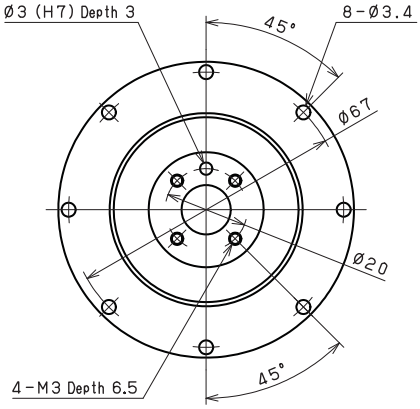

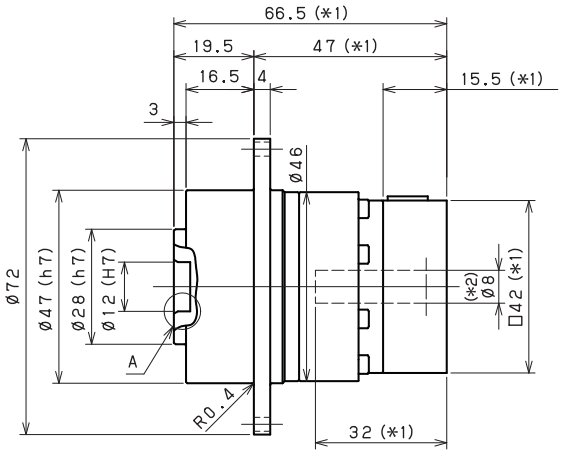

Input shaft bore ≦ϕ14

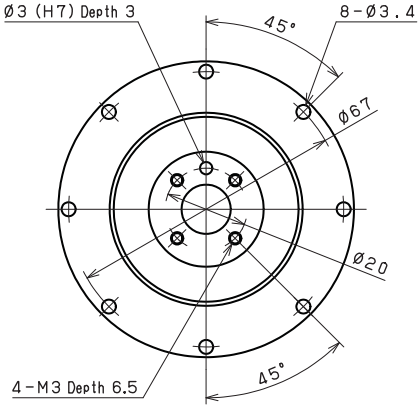

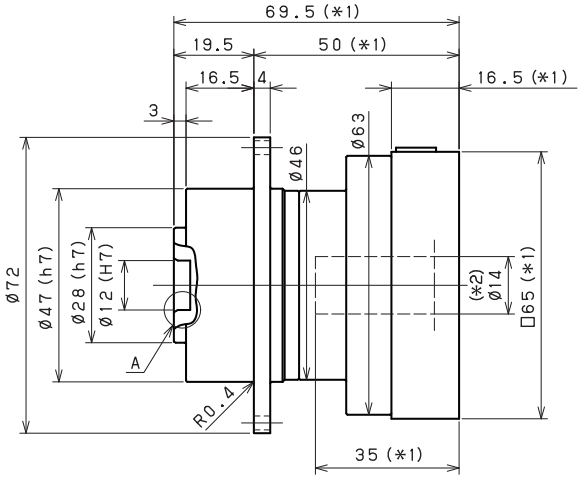

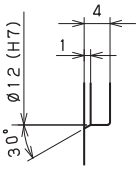

Enlarged detail A

*1) Length will vary depending on motor

*2) Bushing will be inserted to adapt to motor shaft

VRT-047 – 2-Stage Dimensions

Input shaft bore ≦ ϕ8

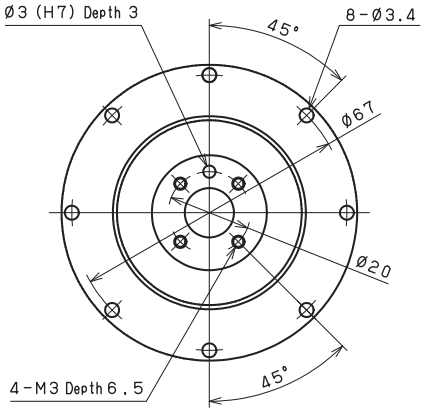

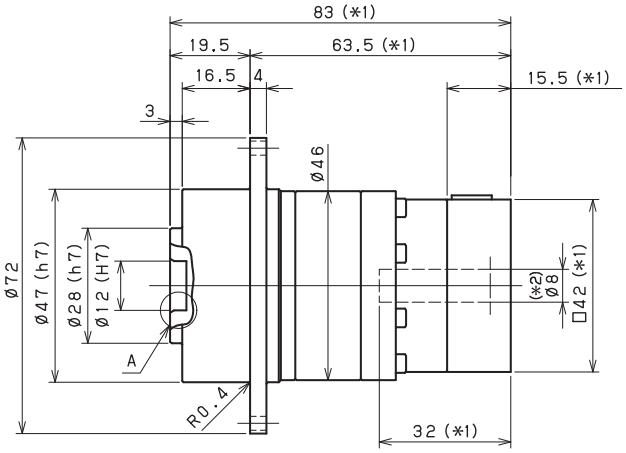

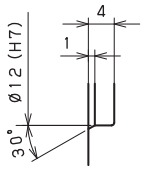

Enlarged detail A

*1) Length will vary depending on motor

*2) Bushing will be inserted to adapt to motor shaft

VRT-047 – 1-Stage Adapter Dimensions

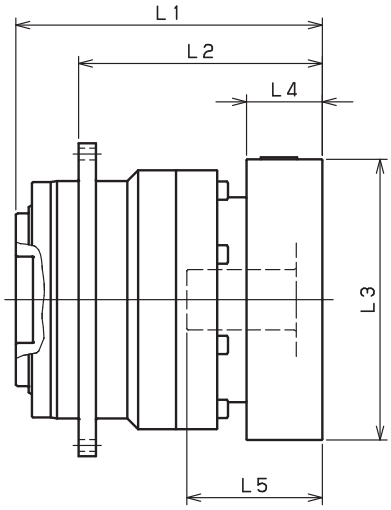

Model Number	**: Adapter Code	1-Stage					
		L1	L*	L2	L3	L4	L5
VRT-047-□-□-S8** (Input shaft bore ≦ φ8)	AA•AC•AD•AF•AG	66.5	51	47	□42	15.5	32
	AB•AE•AH•AJ•AK	71.5	51	52	□42	20.5	37
	BC•BF	66.5	51	47	□60	15.5	32
	CA	71.5	51	52	□60	20.5	37
VRT-047-□-□-14** (Input shaft bore ≦ φ14)	BA•BB•BD•BE•BF•BG•BJ•BK•BP	69.5	53	50	□65	16.5	35
	BC•BH•BM•BN	74.5	53	55	□65	21.5	40
	BL	79.5	53	60	□65	26.5	45

*1) Single reduction : 1/4 - 1/10

*2) Bushing will be inserted to adapt to motor shaft

For an explanation on the Adapter Flange Code, please turn to page 422.

A more comprehensive adapter flange offering can be found using the NIDEC-SHIMPO Online Selector Tool. The variety is constantly expanding and being updated on the Selector Tool. If you have any questions or need any support, contact NIDEC-SHIMPO.

VRT-047 – 2-Stage Adapter Dimensions

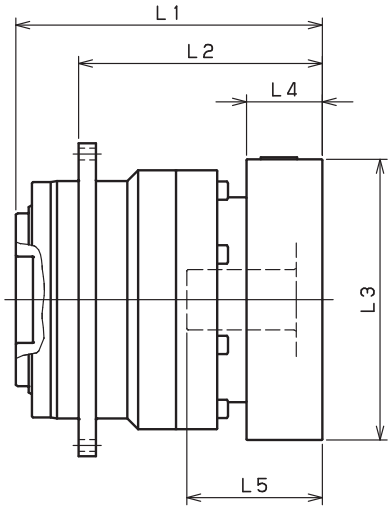

Model Number	**: Adapter Code	2-Stage					
		L1	L*	L2	L3	L4	L5
VRT-047-□-□-S8** (Input shaft bore ≦ φ8)	AA•AC•AD•AF•AG	83	67.5	63.5	□42	15.5	32
	AB•AE•AH•AJ•AK	88	67.5	68.5	□42	20.5	37
	BC•BF	83	67.5	63.5	□60	15.5	32
	CA	88	67.5	68.5	□60	20.5	37
VRT-047-□-□-14** (Input shaft bore ≦ φ14)	BA•BB•BD•BE•BF•BG•BJ•BK•BP	--	--	--	--	--	--
	BC•BH•BM•BN	--	--	--	--	--	--
	BL	--	--	--	--	--	--

*1) Double reduction : 1/16 - 1/100

*2) Bushing will be inserted to adapt to motor shaft

For an explanation on the Adapter Flange Code, please turn to page 422.

A more comprehensive adapter flange offering can be found using the NIDEC-SHIMPO Online Selector Tool. The variety is constantly expanding and being updated on the Selector Tool. If you have any questions or need any support, contact NIDEC-SHIMPO.

VRT-064 – 1-Stage Specifications

Frame Size	**064**								
Stage	**1-Stage**								
Ratio	Unit	Note	4	5	6	7	8	9	10
Nominal Output Torque	[Nm]	*1	27	27	27	27	27	18	18
Maximum Acceleration Torque	[Nm]	*2	50	50	50	50	50	35	35
Emergency Stop Torque	[Nm]	*3	100	100	100	100	100	80	80
Nominal Input Speed	[rpm]	*4	3000						
Maximum Input Speed	[rpm]	*5	6000						
No Load Running Torque	[Nm]	*6	0.08						
Permitted Radial Load	[N]	*7	370	400	420	440	460	480	500
Permitted Axial Load	[N]	*8	360	390	430	460	480	510	530
Maximum Radial Load	[N]	*9	1500						
Maximum Axial Load	[N]	*10	750						
Moment of Inertia (≤ Ø 8)	[kgcm2]	--	0.130	0.100	0.085	0.075	0.068	0.064	0.062
Moment of Inertia (≤ Ø 14)	[kgcm2]	--	0.210	0.180	0.170	0.150	0.150	0.140	0.140
Moment of Inertia (≤ Ø 19)	[kgcm2]	--	0.400	0.400	0.400	0.400	0.400	0.400	0.400
Efficiency	[%]	*11	95						
Torsional Rigidity	[Nm/arc-min]	*12	3						
Maximum Torsional Backlash	[arc-min]	--	≤ 3						
Noise Level	[dB]	*13	≤ 66						
Protection Class	--	*14	IP54 (IP65)						
Ambient Temperature	[°C]	--	0 - 40						
Permitted Housing Temperature	[°C]	--	90						
Weight	[kg]	*15	1.4						

VRT-064 – 2-Stage Specifications

Frame Size	**064**								
Stage	**2-Stage**								
Ratio	Unit	Note	16	20	25	28	35	40	45
Nominal Output Torque	[Nm]	*1	27	27	27	27	27	27	18
Maximum Acceleration Torque	[Nm]	*2	50	50	50	50	50	50	35
Emergency Stop Torque	[Nm]	*3	100	100	100	100	100	100	80
Nominal Input Speed	[rpm]	*4	3000						
Maximum Input Speed	[rpm]	*5	6000						
No Load Running Torque	[Nm]	*6	0.04						
Permitted Radial Load	[N]	*7	580	630	680	700	760	790	820
Permitted Axial Load	[N]	*8	650	720	750	750	750	750	750
Maximum Radial Load	[N]	*9	1500						
Maximum Axial Load	[N]	*10	750						
Moment of Inertia (≤ Ø 8)	[kgcm2]	--	0.059	0.055	0.054	0.056	0.053	0.049	0.530
Moment of Inertia (≤ Ø 14)	[kgcm2]	--	0.140	0.140	0.130	0.140	0.130	0.130	0.130
Moment of Inertia (≤ Ø 19)	[kgcm2]	--	0.360	0.350	0.350	0.360	0.350	0.340	0.350
Efficiency	[%]	*11	90						
Torsional Rigidity	[Nm/arc-min]	*12	3						
Maximum Torsional Backlash	[arc-min]	--	≤ 3						
Noise Level	[dB]	*13	≤ 66						
Protection Class	--	*14	IP54 (IP65)						
Ambient Temperature	[°C]	--	0 - 40						
Permitted Housing Temperature	[°C]	--	90						
Weight	[kg]	*15	1.6						

VRT-064 – 2-Stage Specifications

Frame Size	**064**							
Stage	**2-Stage**							
Ratio	Unit	Note	50	60	70	80	90	100
Nominal Output Torque	[Nm]	*1	27	27	27	27	18	18
Maximum Acceleration Torque	[Nm]	*2	50	50	50	50	35	35
Emergency Stop Torque	[Nm]	*3	100	100	100	100	80	80
Nominal Input Speed	[rpm]	*4	3000					
Maximum Input Speed	[rpm]	*5	6000					
No Load Running Torque	[Nm]	*6	0.04					
Permitted Radial Load	[N]	*7	850	910	950	1000	1000	1100
Permitted Axial Load	[N]	*8	750	750	750	750	750	750
Maximum Radial Load	[N]	*9	1500					
Maximum Axial Load	[N]	*10	750					
Moment of Inertia (≤ Ø 8)	[kgcm2]	--	0.049	0.049	0.049	0.049	0.049	0.049
Moment of Inertia (≤ Ø 14)	[kgcm2]	--	0.130	0.130	0.130	0.130	0.130	0.130
Moment of Inertia (≤ Ø 19)	[kgcm2]	--	0.340	0.340	0.340	0.340	0.340	0.340
Efficiency	[%]	*11	90					
Torsional Rigidity	[Nm/arc-min]	*12	3					
Maximum Torsional Backlash	[arc-min]	--	≤ 3					
Noise Level	[dB]	*13	≤ 66					
Protection Class	--	*14	IP54 (IP65)					
Ambient Temperature	[°C]	--	0 - 40					
Permitted Housing Temperature	[°C]	--	90					
Weight	[kg]	*15	1.6					

*1) At nominal input speed, service life is 20,000 hours
*2) The maximum torque when starting or stopping operation
*3) The maximum torque allowed under a stress situation (Permitted 1,000 times during service life)
*4) The average input speed
*5) The maximum intermittent input speed
*6) This is the torque at no load applied on the input shaft. The input speed is 3,000 rpm for VRT 064
*7) At this load and nominal input speed, service life will be 20,000 hours. (The radial load applied to the output side bearing)
*8) At this load and nominal input speed, service life will be 20,000 hours. (The axial load applied to the output flange center)
*9) The maximum radial load that the reducer can accept
*10) The maximum axial load that the reducer can accept
*11) The efficiency at the nominal torque rating
*12) This does not include the lost motion
*13) Contact NIDEC-SHIMPO for the testing conditions and environment
*14) IP65 (wash-down) is available as an option. Contact NIDEC-SHIMPO for more details and our food grade options
*15) The weight may vary slightly between models

VRT-064 – 1-Stage Dimensions

Input shaft bore ≦ϕ8

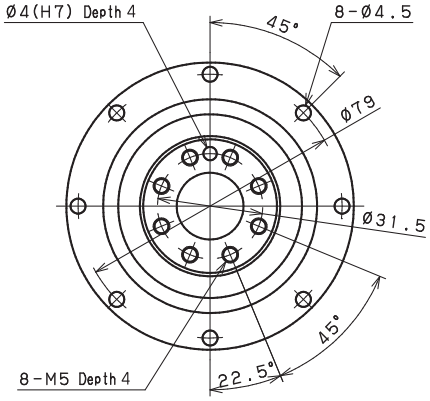

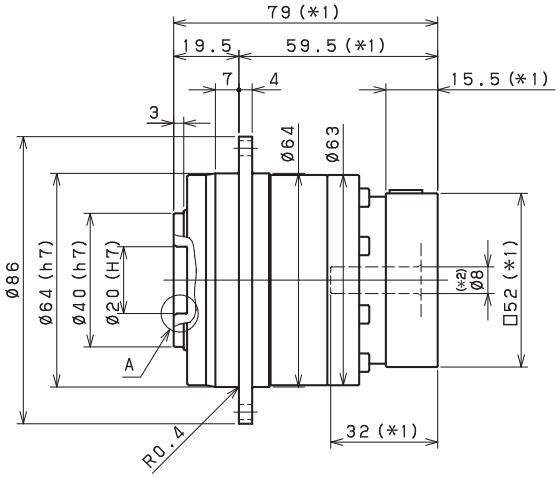

Input shaft bore ≦ϕ14

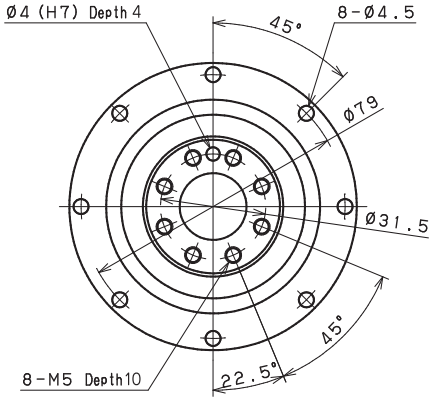

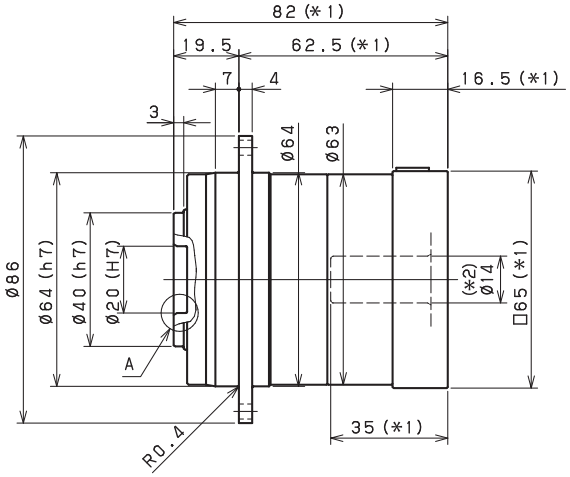

Input shaft bore ≦ϕ19

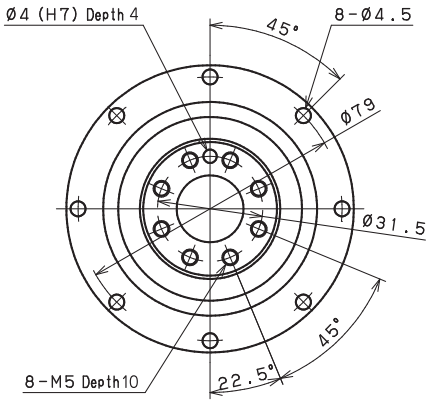

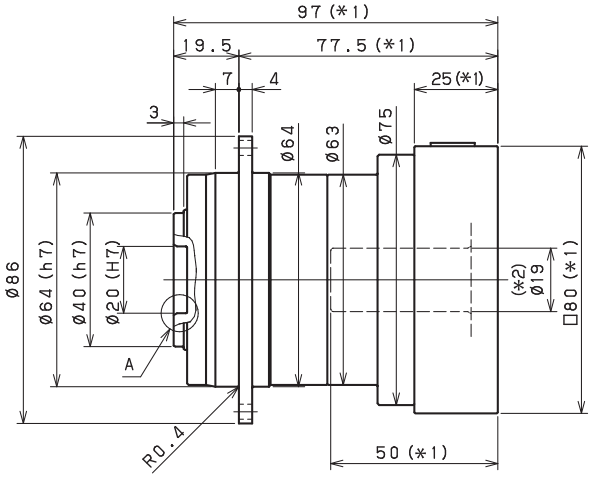

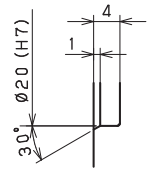

Enlarged detail A

*1) Length will vary depending on motor

*2) Bushing will be inserted to adapt to motor shaft

VRT-064 – 2-Stage Dimensions

Input shaft bore ≦ϕ8

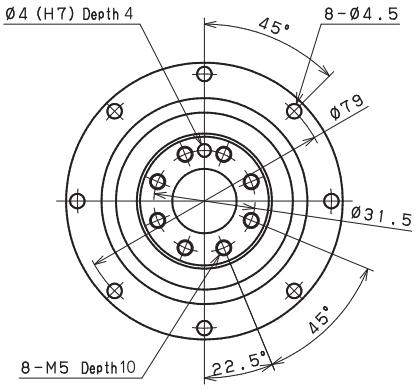

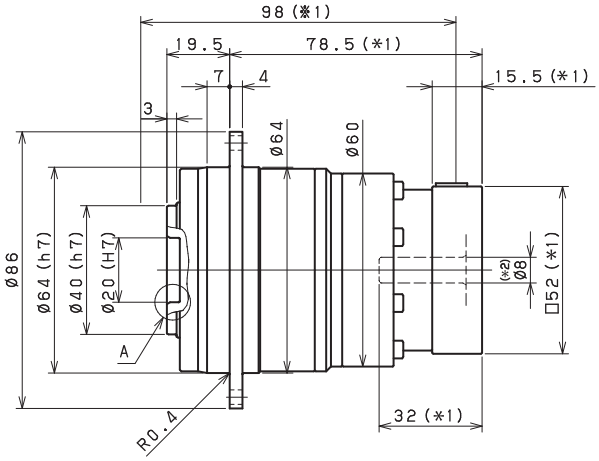

Input shaft bore ≦ϕ14

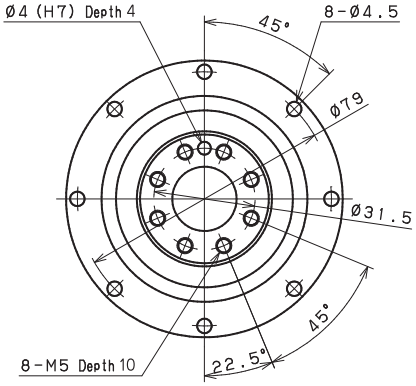

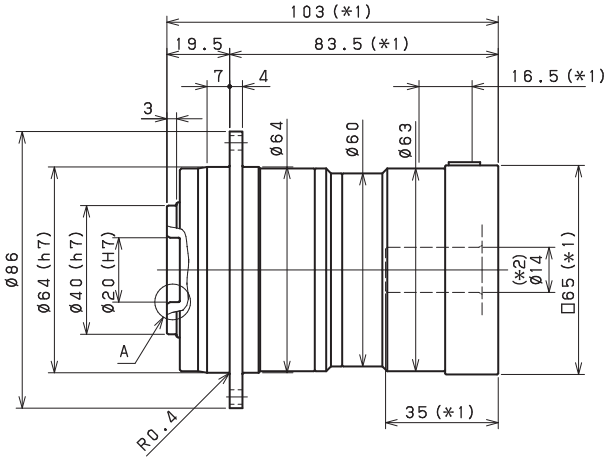

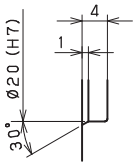

Enlarged detail A

*1) Length will vary depending on motor

*2) Bushing will be inserted to adapt to motor shaft

VRT-064 – 1-Stage Adapter Dimensions

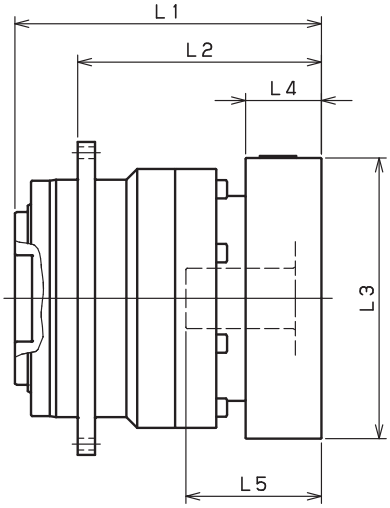

Model Number	**: Adapter Code	1-Stage					
		L1	L*	L2	L3	L4	L5
VRT-064-□-□-8** (Input shaft bore ≦ φ8)	AA•AC•AD•AF•AG•AL•AM•AN•AQ	79	63.5	59.5	□52	15.5	32
	AB•AE•AH•AJ•AK	84	63.5	64.5	□52	20.5	37
	BA•BB•BD•BE•BG•BH•BJ	79	63.5	59.5	□60	15.5	32
	BC•BF	84	63.5	64.5	□60	20.5	37
	CA	84	63.5	64.5	□70	20.5	37
VRT-064-□-□-14** (Input shaft bore ≦ φ14)	BA•BB•BD•BE•BF•BG•BH•BJ•BK•BP	82	65.5	62.5	□65	16.5	35
	BC•BH•BM•BN	87	65.5	67.5	□65	21.5	40
	BL	92	65.5	72.5	□65	26.5	45
	CA•CC	82	65.5	62.5	□70	16.5	35
	CB	87	65.5	67.5	□70	21.5	40
	DA•DB•DC•DD•DF•DH•DJ	82	65.5	62.5	□80	16.5	35
	DE•DL	87	65.5	67.5	□80	21.5	40
	DG•DK	92	65.5	72.5	□80	26.5	45
	EA•EB•EC•EF•EG•EK•EL	82	65.5	62.5	□90	16.5	35
	EJ•EM	87	65.5	67.5	□90	21.5	40
	ED•EE•EH	92	65.5	72.5	□90	26.5	45
	FA	82	65.5	62.5	□100	16.5	35
	FB	82	65.5	62.5	□115	16.5	35
VRT-064-□-□-19** (Input shaft bore ≦ φ19)	DA•DB•DC	97	72	77.5	□80	25	50
	DD	107	72	87.5	□80	35	60
	DE	102	72	82.5	□80	30	55
	EA	102	72	82.5	□90	30	55
	EB•ED	97	72	77.5	□90	25	50
	EC	107	72	87.5	□90	35	60
	FA	97	72	77.5	□100	25	50
	FB	107	72	87.5	□100	35	60

*1) Single reduction : 1/4 - 1/10

*2) Bushing will be inserted to adapt to motor shaft

For an explanation on the Adapter Flange Code, please turn to page 422.

A more comprehensive adapter flange offering can be found using the NIDEC-SHIMPO Online Selector Tool. The variety is constantly expanding and being updated on the Selector Tool. If you have any questions or need any support, contact NIDEC-SHIMPO.

VRT-064 – 2-Stage Adapter Dimensions

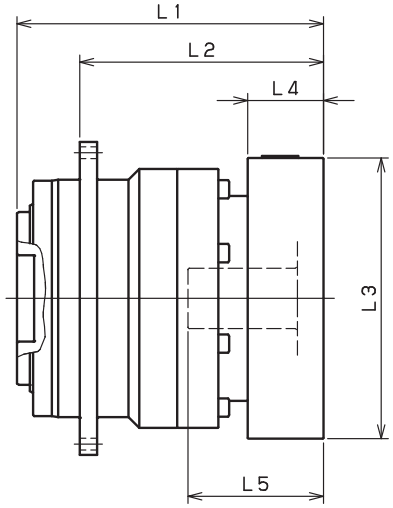

Model Number	**: Adapter Code	2-Stage					
		L1	L*	L2	L3	L4	L5
VRT-064-□-□-8** (Input shaft bore ≦ φ8)	AA•AC•AD•AF•AG•AL•AM•AN•AQ	98	82.5	78.5	□52	15.5	32
	AB•AE•AH•AJ•AK	103	82.5	83.5	□52	20.5	37
	BA•BB•BD•BE•BG•BH•BJ	98	82.5	78.5	□60	15.5	32
	BC•BF	103	82.5	83.5	□60	20.5	37
	CA	103	82.5	83.5	□70	20.5	37
VRT-064-□-□-14** (Input shaft bore ≦ φ14)	BA•BB•BD•BE•BF•BG•BH•BJ•BK•BP	103	86.5	83.5	□65	16.5	35
	BC•BH•BM•BN	108	86.5	88.5	□65	21.5	40
	BL	113	86.5	93.5	□65	26.5	45
	CA•CC	103	86.5	83.5	□70	16.5	35
	CB	108	86.5	88.5	□70	21.5	40
	DA•DB•DC•DD•DF•DH•DJ	103	86.5	83.5	□80	16.5	35
	DE•DL	108	86.5	88.5	□80	21.5	40
	DG•DK	113	86.5	93.5	□80	26.5	45
	EA•EB•EC•EF•EG•EK•EL	103	86.5	83.5	□90	16.5	35
	EJ•EM	108	86.5	88.5	□90	21.5	40
	ED•EE•EH	113	86.5	93.5	□90	26.5	45
	FA	103	86.5	83.5	□100	16.5	35
	FB	103	86.5	83.5	□115	16.5	35
VRT-064-□-□-19** (Input shaft bore ≦ φ19)	DA•DB•DC	118	93	98.5	□80	25	50
	DD	128	93	108.5	□80	35	60
	DE	123	93	103.5	□80	30	55
	EA	123	93	103.5	□90	30	55
	EB•ED	118	93	98.5	□90	25	50
	EC	128	93	108.5	□90	35	60
	FA	118	93	98.5	□100	25	50
	FB	128	93	108.5	□100	35	60

*1) Double reduction : 1/16 - 1/100

*2) Bushing will be inserted to adapt to motor shaft

For an explanation on the Adapter Flange Code, please turn to page 422.

A more comprehensive adapter flange offering can be found using the NIDEC-SHIMPO Online Selector Tool. The variety is constantly expanding and being updated on the Selector Tool. If you have any questions or need any support, contact NIDEC-SHIMPO.

VRT-090 – 1-Stage Specifications

Frame Size	**090**								
Stage	**1-Stage**								
Ratio	Unit	Note	4	5	6	7	8	9	10
Nominal Output Torque	[Nm]	*1	75	75	75	75	75	50	50
Maximum Acceleration Torque	[Nm]	*2	125	125	125	125	125	80	80
Emergency Stop Torque	[Nm]	*3	250	250	250	250	250	200	200
Nominal Input Speed	[rpm]	*4	3000						
Maximum Input Speed	[rpm]	*5	6000						
No Load Running Torque	[Nm]	*6	0.17						
Permitted Radial Load	[N]	*7	720	780	830	870	910	950	980
Permitted Axial Load	[N]	*8	620	680	740	790	830	880	920
Maximum Radial Load	[N]	*9	3300						
Maximum Axial Load	[N]	*10	1700						
Moment of Inertia (≤ Ø 8)	[kgcm2]	--	-	-	-	-	-	-	-
Moment of Inertia (≤ Ø 14)	[kgcm2]	--	0.770	0.580	0.480	0.410	0.370	0.350	0.330
Moment of Inertia (≤ Ø 19)	[kgcm2]	--	1.200	1.000	0.940	0.880	0.840	0.810	0.800
Moment of Inertia (≤ Ø 28)	[kgcm2]	--	2.900	2.900	2.800	2.800	2.800	2.800	2.800
Efficiency	[%]	*11	95						
Torsional Rigidity	[Nm/arc-min]	*12	10						
Maximum Torsional Backlash	[arc-min]	--	≤ 3						
Noise Level	[dB]	*13	≤ 67						
Protection Class	--	*14	IP54 (IP65)						
Ambient Temperature	[°C]	--	0 - 40						
Permitted Housing Temperature	[°C]	--	90						
Weight	[kg]	*15	3.6						

VRT-090 – 2-Stage Specifications

Frame Size	**090**							
Stage	**2-Stage**							
Ratio	Unit	Note	16	20	25	28	35	40
Nominal Output Torque	[Nm]	*1	75	75	75	75	75	75
Maximum Acceleration Torque	[Nm]	*2	125	125	125	125	125	125
Emergency Stop Torque	[Nm]	*3	250	250	250	250	250	250
Nominal Input Speed	[rpm]	*4	3000					
Maximum Input Speed	[rpm]	*5	6000					
No Load Running Torque	[Nm]	*6	0.05					
Permitted Radial Load	[N]	*7	1200	1200	1300	1400	1500	1600
Permitted Axial Load	[N]	*8	1100	1200	1400	1400	1600	1700
Maximum Radial Load	[N]	*9	3300					
Maximum Axial Load	[N]	*10	1700					
Moment of Inertia (≤ Ø 8)	[kgcm2]	--	0.160	0.140	0.130	0.140	0.130	0.100
Moment of Inertia (≤ Ø 14)	[kgcm2]	--	0.310	0.290	0.280	0.300	0.280	0.250
Moment of Inertia (≤ Ø 19)	[kgcm2]	--	0.750	0.730	0.720	0.730	0.720	0.700
Moment of Inertia (≤ Ø 28)	[kgcm2]	--	2.800	2.700	2.700	2.800	2.700	2.600
Efficiency	[%]	*11	90					
Torsional Rigidity	[Nm/arc-min]	*12	10					
Maximum Torsional Backlash	[arc-min]	--	≤ 3					
Noise Level	[dB]	*13	≤ 67					
Protection Class	--	*14	IP54 (IP65)					
Ambient Temperature	[°C]	--	0 - 40					
Permitted Housing Temperature	[°C]	--	90					
Weight	[kg]	*15	4					

VRT-090 – 2-Stage Specifications

Frame Size	090								
Stage	**2-Stage**								
Ratio	Unit	Note	45	50	60	70	80	90	100
Nominal Output Torque	[Nm]	*1	50	75	75	75	75	50	50
Maximum Acceleration Torque	[Nm]	*2	80	125	125	125	125	80	80
Emergency Stop Torque	[Nm]	*3	200	250	250	250	250	200	200
Nominal Input Speed	[rpm]	*4	3000						
Maximum Input Speed	[rpm]	*5	6000						
No Load Running Torque	[Nm]	*6	0.05						
Permitted Radial Load	[N]	*7	1600	1700	1800	1900	2000	2000	2100
Permitted Axial Load	[N]	*8	1700	1700	1700	1700	1700	1700	1700
Maximum Radial Load	[N]	*9	3300						
Maximum Axial Load	[N]	*10	1700						
Moment of Inertia (≤ Ø 8)	[kgcm2]	--	0.120	0.100	0.099	0.098	0.098	0.098	0.098
Moment of Inertia (≤ Ø 14)	[kgcm2]	--	0.270	0.250	0.250	0.250	0.250	0.250	0.250
Moment of Inertia (≤ Ø 19)	[kgcm2]	--	0.710	0.700	0.700	0.690	0.690	0.690	0.690
Moment of Inertia (≤ Ø 28)	[kgcm2]	--	2.700	2.600	2.600	2.600	2.600	2.600	2.600
Efficiency	[%]	*11	90						
Torsional Rigidity	[Nm/arc-min]	*12	10						
Maximum Torsional Backlash	[arc-min]	--	≤ 3						
Noise Level	[dB]	*13	≤ 67						
Protection Class	--	*14	IP54 (IP65)						
Ambient Temperature	[°C]	--	0 - 40						
Permitted Housing Temperature	[°C]	--	90						
Weight	[kg]	*15	4						

*1) At nominal input speed, service life is 20,000 hours
*2) The maximum torque when starting or stopping operation
*3) The maximum torque allowed under a stress situation (Permitted 1,000 times during service life)
*4) The average input speed
*5) The maximum intermittent input speed
*6) This is the torque at no load applied on the input shaft. The input speed is 3,000 rpm for VRT 090
*7) At this load and nominal input speed, service life will be 20,000 hours. (The radial load applied to the output side bearing)
*8) At this load and nominal input speed, service life will be 20,000 hours. (The axial load applied to the output flange center)
*9) The maximum radial load that the reducer can accept
*10) The maximum axial load that the reducer can accept
*11) The efficiency at the nominal torque rating
*12) This does not include the lost motion
*13) Contact NIDEC-SHIMPO for the testing conditions and environment
*14) IP65 (wash-down) is available as an option. Contact NIDEC-SHIMPO for more details and our food grade options
*15) The weight may vary slightly between models

VRT-090 – 1-Stage Dimensions

Input shaft bore ≦ϕ14

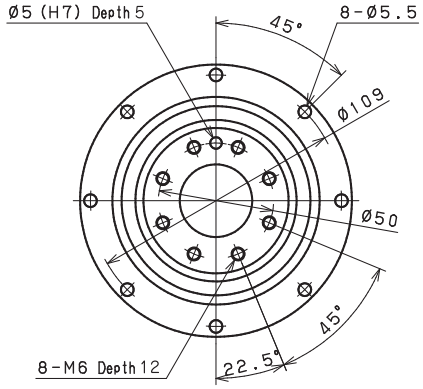

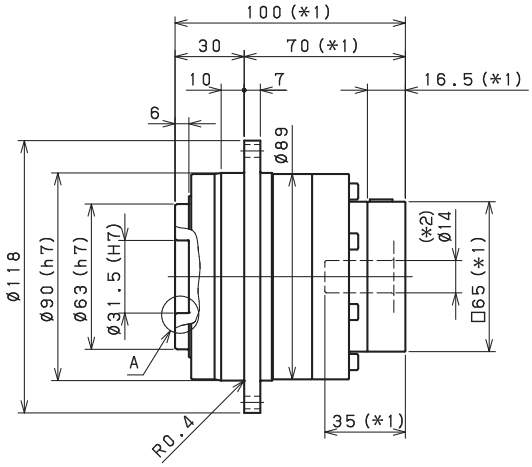

Input shaft bore ≦ϕ19

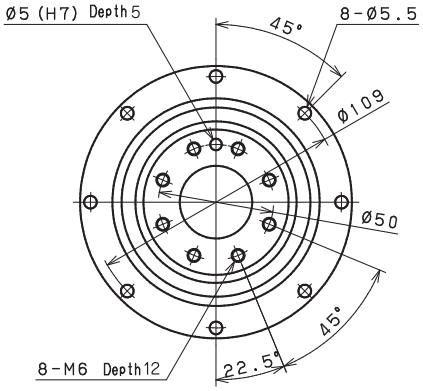

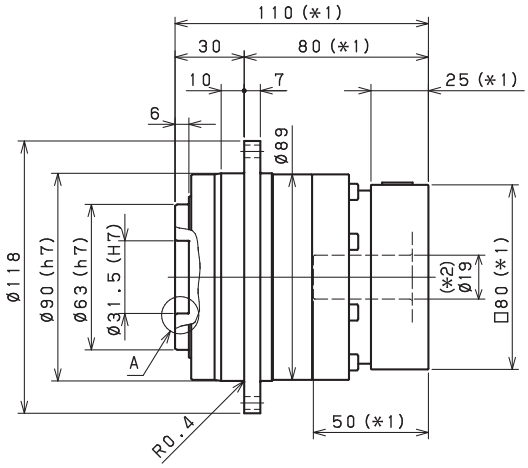

Input shaft bore ≦ϕ28

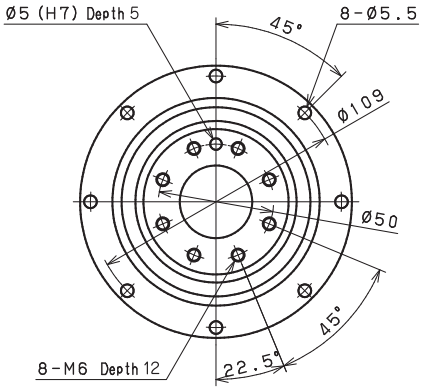

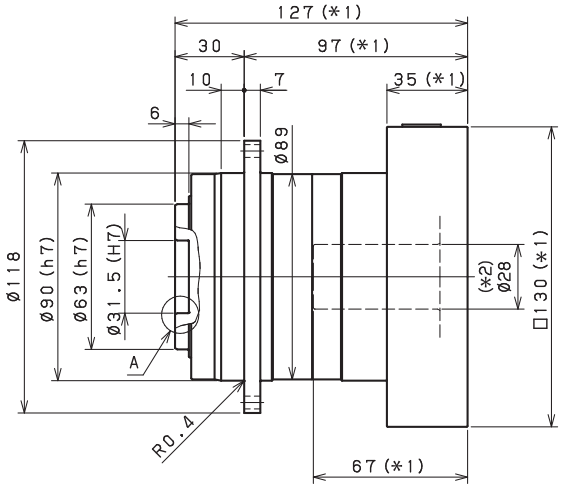

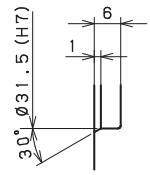

Enlarged detail A

*1) Length will vary depending on motor

*2) Bushing will be inserted to adapt to motor shaft

VRT-090 – 2-Stage Dimensions

Input shaft bore ≦ϕ8

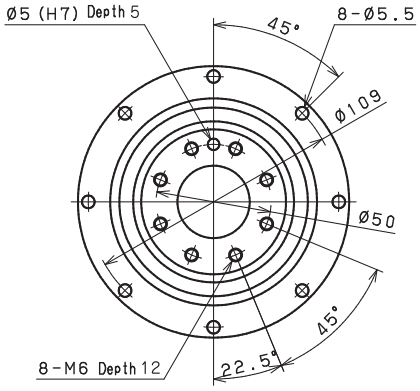

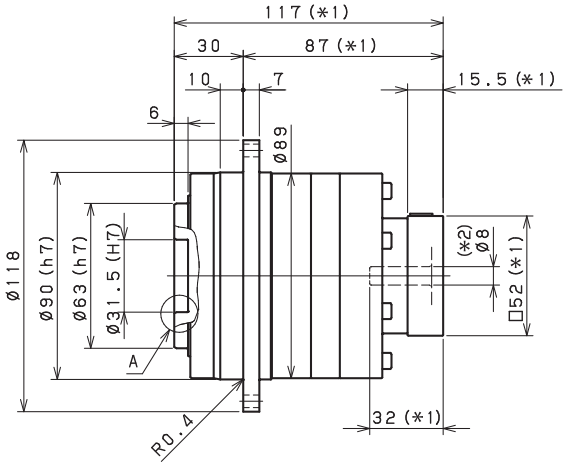

Input shaft bore ≦ϕ14

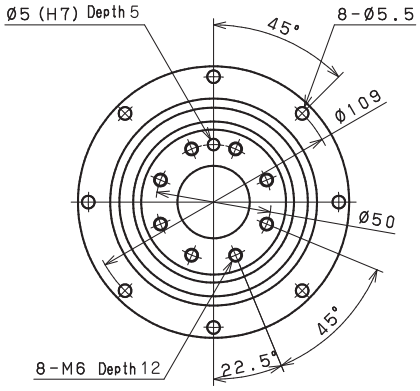

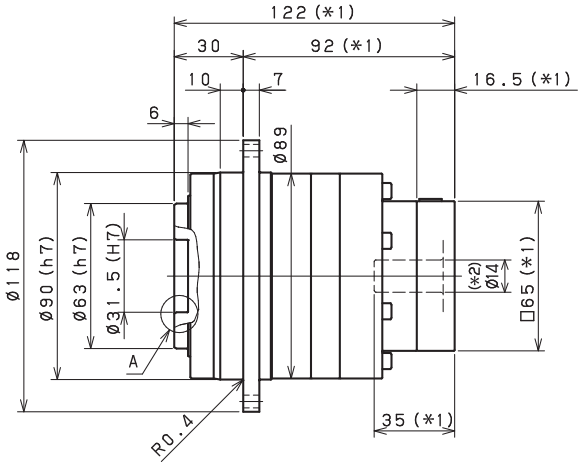

Input shaft bore ≦ϕ19

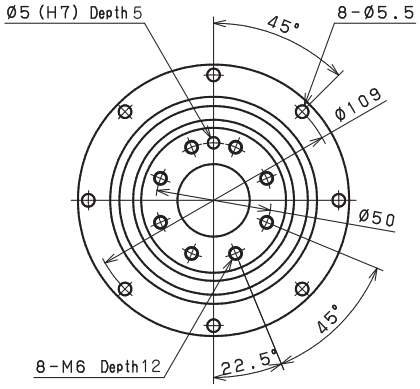

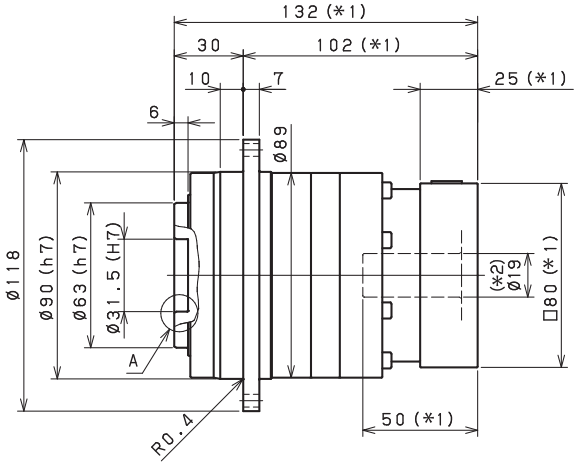

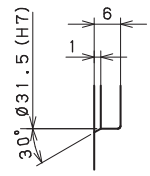

Enlarged detail A

*1) Length will vary depending on motor

*2) Bushing will be inserted to adapt to motor shaft

VRT-090 – 1-Stage Adapter Dimensions

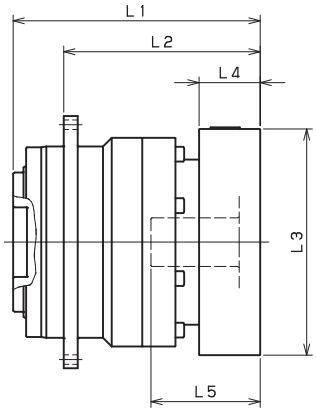

Model Number	**: Adapter Code	1-Stage					
		L1	L*	L2	L3	L4	L5
VRT-090-□-□-8** (Input shaft bore ≦ φ8)	AA•AC•AD•AF•AG•AL•AM•AN•AQ	--	--	--	--	--	--
	AB•AE•AH•AJ•AK	--	--	--	--	--	--
	BA•BB•BD•BE•BG•BH•BJ	--	--	--	--	--	--
	CA	--	--	--	--	--	--
VRT-090-□-□-14** (Input shaft bore ≦ φ14)	BA•BB•BD•BE•BF•BG•BH•BJ•BK•BP	100	83.5	70	□65	16.5	35
	BC•BH•BM•BN	105	83.5	75	□65	21.5	40
	CA•CC	100	83.5	70	□70	16.5	35
	DA•DB•DC•DD•DF•DH•DJ	100	83.5	70	□80	16.5	35
	EA•EB•EC•EF•EG•EK•EL	100	83.5	70	□90	16.5	35
	FA	100	83.5	70	□100	16.5	35
	FB	110	83.5	80	□100	26.5	45
	JA	115	83.5	85	□150	31.5	50
VRT-090-□-□-19** (Input shaft bore ≦ φ19)	DA•DB•DC	110	85	80	□80	25	50
	EB•ED	110	85	80	□90	25	50
	FA	110	85	80	□100	25	50
	FB	120	85	90	□100	35	60
	GA•GC•GH	115	85	85	□115	30	55
	GB•GD•GJ	110	85	80	□115	25	50
	GE•GF	120	85	90	□115	35	60
	HA	110	85	80	□130	25	50
	HB	125	85	95	□130	40	65
	HC•HD•HE	115	85	85	□130	30	55
	JA	120	85	90	□150	35	60
	JB	125	85	95	□150	40	65
VRT-090-□-□-28** (Input shaft bore ≦ φ28)	FA•FB•FC	127	92	97	□100	35	67
	FD•FE	122	92	92	□100	30	62
	GA•GB•GC•GD•GE•GF•GG•GH	127	92	97	□115	35	67
	HA•HC•HD	127	92	97	□130	35	67
	HB	137	92	107	□130	45	77
	HE	142	92	112	□130	50	82
	HF	122	92	92	□130	30	62
	JA•JB•JC•JF	127	92	97	□150	35	67
	JD	147	92	117	□150	55	87
	JE	137	92	107	□150	45	77

*1) Single reduction : 1/3~ 1/10 *2) Bushing will be inserted to adapt to motor shaft

For an explanation on the Adapter Flange Code, please turn to page 422.

A more comprehensive adapter flange offering can be found using the NIDEC-SHIMPO Online Selector Tool. The variety is constantly expanding and being updated on the Selector Tool. If you have any questions or need any support, contact NIDEC-SHIMPO.

VRT-090 – 2-Stage Adapter Dimensions

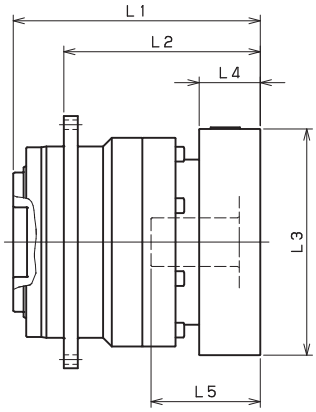

Model Number	**: Adapter Code	2-Stage					
		L1	L*	L2	L3	L4	L5
VRT-090-□-□-8** (Input shaft bore ≦ φ8)	AA•AC•AD•AF•AG•AL•AM•AN•AQ	117	101.5	87	□52	15.5	32
	AB•AE•AH•AJ•AK	122	101.5	92	□52	20.5	37
	BA•BB•BD•BE•BG•BH•BJ	117	101.5	87	□60	15.5	32
	CA	122	101.5	92	□70	20.5	37
VRT-090-□-□-14** (Input shaft bore ≦ φ14)	BA•BB•BD•BE•BF•BG•BH•BJ•BK•BP	122	105.5	92	□65	16.5	35
	BC•BH•BM•BN	127	105.5	97	□65	21.5	40
	CA•CC	122	105.5	92	□70	16.5	35
	DA•DB•DC•DD•DF•DH•DJ	122	105.5	92	□80	16.5	35
	EA•EB•EC•EF•EG•EK•EL	122	105.5	92	□90	16.5	35
	FA	122	105.5	92	□100	16.5	35
	FB	132	105.5	102	□100	26.5	45
	JA	137	105.5	107	□150	31.5	50
VRT-090-□-□-19** (Input shaft bore ≦ φ19)	DA•DB•DC	132	107	102	□80	25	50
	EB•ED	132	107	102	□90	25	50
	FA	132	107	102	□100	25	50
	FB	142	107	112	□100	35	60
	GA•GC•GH	137	107	107	□115	30	55
	GB•GD•GJ	132	107	102	□115	25	50
	GE•GF	142	107	112	□115	35	60
	HA	132	107	102	□130	25	50
	HB	147	107	117	□130	40	65
	HC•HD•HE	137	107	107	□130	30	55
	JA	142	107	112	□150	35	60
	JB	147	107	117	□150	40	65
VRT-090-□-□-28** (Input shaft bore ≦ φ28)	FA•FB•FC	151	116	121	□100	35	67
	FD•FE	146	116	116	□100	30	62
	GA•GB•GC•GD•GE•GF•GG•GH	151	116	121	□115	35	67
	HA•HC•HD	151	116	121	□130	35	67
	HB	161	116	131	□130	45	77
	HE	166	116	136	□130	50	82
	HF	146	116	116	□130	30	62
	JA•JB•JC•JF	151	116	121	□150	35	67
	JD	171	116	141	□150	55	87
	JE	161	116	131	□150	45	77

*1) Double reduction : 1/15~ 1/100 *2) Bushing will be inserted to adapt to motor shaft

For an explanation on the Adapter Flange Code, please turn to page 422.

A more comprehensive adapter flange offering can be found using the NIDEC-SHIMPO Online Selector Tool. The variety is constantly expanding and being updated on the Selector Tool. If you have any questions or need any support, contact NIDEC-SHIMPO.

VRT-110 – 1-Stage Specifications

Frame Size	**110**					
Stage	**1-Stage**					
Ratio	Unit	Note	4	5	7	10
Nominal Output Torque	[Nm]	*1	120	180	180	120
Maximum Output Torque	[Nm]	*2	330	330	330	225
Emergency Stop Torque	[Nm]	*3	625	625	625	500
Nominal Input Speed	[rpm]	*4	3000			
Maximum Input Speed	[rpm]	*5	6000			
No Load Running Torque	[Nm]	*6	0.77			
Permitted Radial Load	[N]	*7	4700	5000	5600	6200
Permitted Axial Load	[N]	*8	3200	3400	3800	4200
Maximum Radial Load	[N]	*9	12000			
Maximum Axial Load	[N]	*10	8800			
Moment of Inertia (≤ Ø 14)	[kgcm2]	--	--	--	--	--
Moment of Inertia (≤ Ø 19)	[kgcm2]	--	3.100	2.300	1.500	1.100
Moment of Inertia (≤ Ø 28)	[kgcm2]	--	5.100	4.300	3.500	3.100
Moment of Inertia (≤ Ø 38)	[kgcm2]	--	13.000	12.000	11.000	11.000
Efficiency	[%]	*11	95			
Torsional Rigidity	[Nm/arcmin]	*12	31			
Maximum Torsional Backlash	[Arc-min]	--	≤ 3			
Noise Level	[dB]	*13	≤ 71			
Protection Class	--	*14	IP54 (IP65)			
Ambient Temperature	[°C]	--	0 - 40			
Permitted Housing Temperature	[°C]	--	90			
Weight	[kg]	*15	7.8			

VRT-110 – 2-Stage Specifications

Frame Size	**110**					
Stage	**2-Stage**					
Ratio	Unit	Note	16	20	25	28
Nominal Output Torque	[Nm]	*1	180	180	180	180
Maximum Output Torque	[Nm]	*2	330	330	330	330
Emergency Stop Torque	[Nm]	*3	625	625	625	625
Nominal Input Speed	[rpm]	*4	3000			
Maximum Input Speed	[rpm]	*5	6000			
No Load Running Torque	[Nm]	*6	0.17			
Permitted Radial Load	[N]	*7	7100	7600	8200	8500
Permitted Axial Load	[N]	*8	4800	5200	5500	5700
Maximum Radial Load	[N]	*9	12000			
Maximum Axial Load	[N]	*10	8800			
Moment of Inertia (≤ Ø 14)	[kgcm2]	--	1.000	0.800	0.700	0.900
Moment of Inertia (≤ Ø 19)	[kgcm2]	--	1.500	1.200	1.200	1.400
Moment of Inertia (≤ Ø 28)	[kgcm2]	--	3.400	3.100	3.100	3.300
Moment of Inertia (≤ Ø 38)	[kgcm2]	--	11.000	11.000	11.000	11.000
Efficiency	[%]	*11	90			
Torsional Rigidity	[Nm/arcmin]	*12	31			
Maximum Torsional Backlash	[Arc-min]	--	≤ 3			
Noise Level	[dB]	*13	≤ 71			
Protection Class	--	*14	IP54 (IP65)			
Ambient Temperature	[°C]	--	0 - 40			
Permitted Housing Temperature	[°C]	--	90			
Weight	[kg]	*15	8.6			

VRT-110 – 2-Stage Specifications

Frame Size	110						
Stage	2-Stage						
Ratio	Unit	Note	35	40	50	70	100
Nominal Output Torque	[Nm]	*1	180	180	180	180	120
Maximum Output Torque	[Nm]	*2	330	330	330	330	225
Emergency Stop Torque	[Nm]	*3	625	625	625	625	500
Nominal Input Speed	[rpm]	*4	3000				
Maximum Input Speed	[rpm]	*5	6000				
No Load Running Torque	[Nm]	*6	0.17				
Permitted Radial Load	[N]	*7	9000	9400	10000	11000	12000
Permitted Axial Load	[N]	*8	6100	6400	6800	7500	8400
Maximum Radial Load	[N]	*9	12000				
Maximum Axial Load	[N]	*10	8800				
Moment of Inertia (≤ Ø 14)	[kgcm2]	--	0.700	0.400	0.400	0.400	0.400
Moment of Inertia (≤ Ø 19)	[kgcm2]	--	1.100	0.800	0.800	0.800	0.800
Moment of Inertia (≤ Ø 28)	[kgcm2]	--	3.100	2.800	2.800	2.700	2.700
Moment of Inertia (≤ Ø 38)	[kgcm2]	--	11.000	10.000	10.000	10.000	10.000
Efficiency	[%]	*11	--				
Torsional Rigidity	[Nm/arcmin]	*12	31				
Maximum Torsional Backlash	[Arc-min]	--	≤ 3				
Noise Level	[dB]	*13	≤ 71				
Protection Class	--	*14	IP54 (IP65)				
Ambient Temperature	[°C]	--	0 - 40				
Permitted Housing Temperature	[°C]	--	90				
Weight	[kg]	*15	8.6				

*1) At nominal input speed, service life is 20,000 hours
*2) The maximum torque when starting or stopping operation
*3) The maximum torque allowed under a stress situation (Permitted 1,000 times during service life)
*4) The average input speed
*5) The maximum intermittent input speed
*6) This is the torque at no load applied on the input shaft. The input speed is 3,000 rpm for VRT 110
*7) At this load and nominal input speed, service life will be 20,000 hours. (The radial load applied to the output side bearing)
*8) At this load and nominal input speed, service life will be 20,000 hours. (The axial load applied to the output flange center)
*9) The maximum radial load that the reducer can accept
*10) The maximum axial load that the reducer can accept
*11) The efficiency at the nominal torque rating
*12) This does not include the lost motion
*13) Contact NIDEC-SHIMPO for the testing conditions and environment
*14) IP65 (wash-down) is available as an option. Contact NIDEC-SHIMPO for more details and our food grade options
*15) The weight may vary slightly between models

VRT-110 – 1-Stage Dimensions

Input shaft bore ≦ϕ19

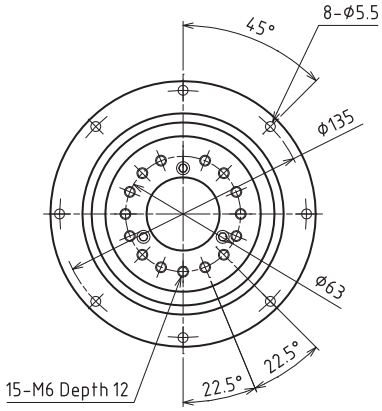

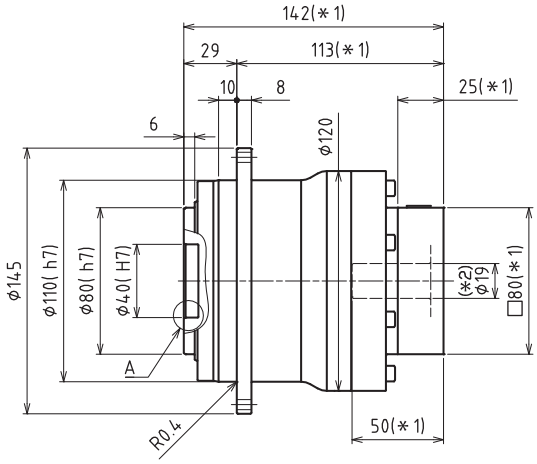

Input shaft bore ≦ϕ28

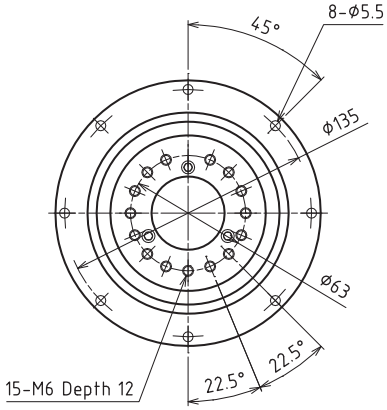

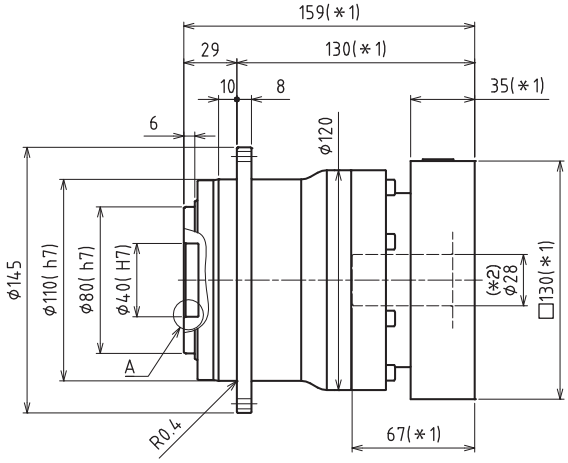

Input shaft bore ≦ϕ38

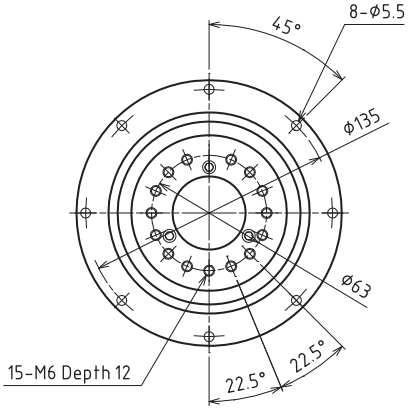

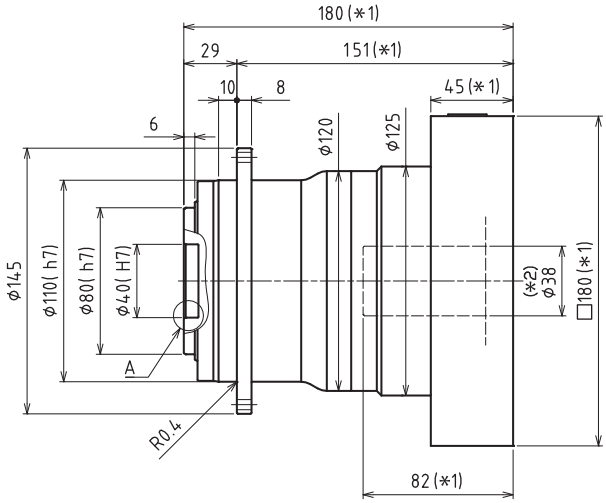

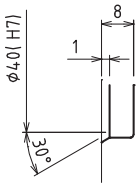

Enlarged detail A

*1) Length will vary depending on motor

*2) Bushing will be inserted to adapt to motor shaft

VRT-110 – 2-Stage Dimensions

Input shaft bore ≦ϕ14

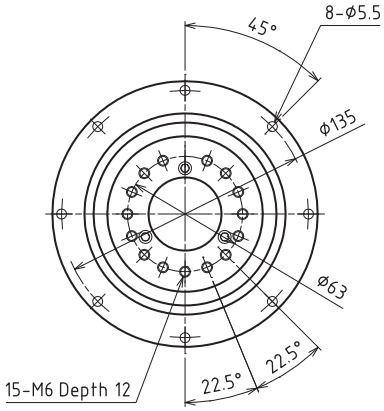

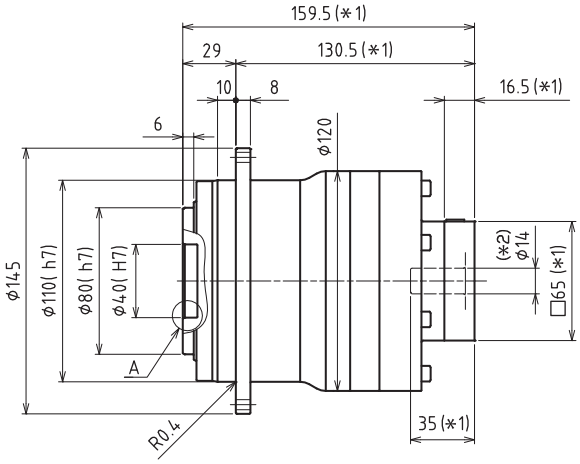

Input shaft bore ≦ϕ19

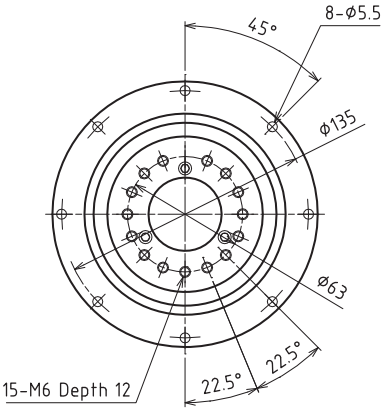

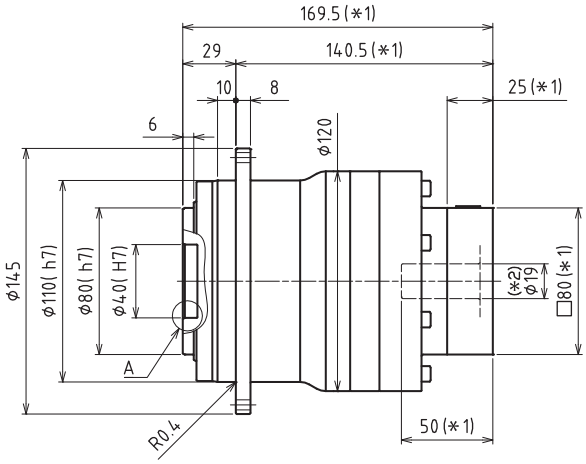

Input shaft bore ≦ϕ28

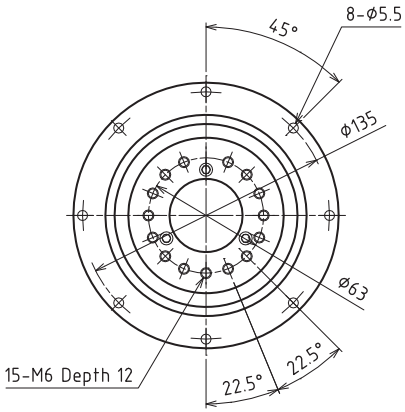

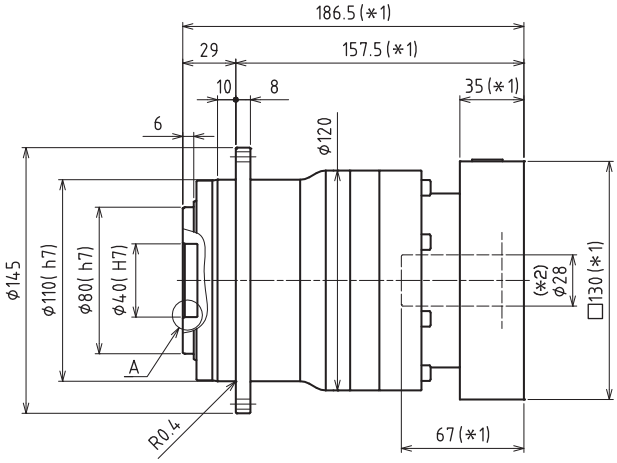

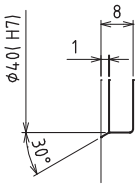

Enlarged detail A

*1) Length will vary depending on motor

*2) Bushing will be inserted to adapt to motor shaft

VRT-110 – 1-Stage Adapter Dimensions

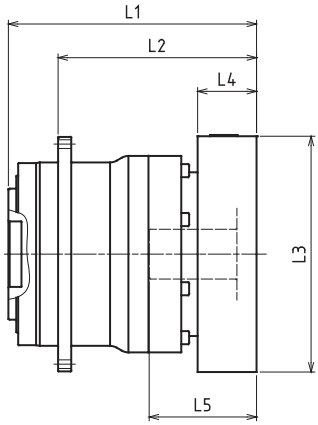

Model Number	**: Adapter Code	1-Stage					
		L1	L*	L2	L3	L4	L5
VRT-110-□-□-14** (Input shaft bore ≦ φ14)	BA•BB•BD•BE•BF•BG•BH•BJ•BK•BP	--	--	--	--	--	--
	BC•BH•BM•BN	--	--	--	--	--	--
	CA•CC	--	--	--	--	--	--
	DA•DB•DC•DD•DF•DH•DJ	--	--	--	--	--	--
	EA•EB•EC•EF•EG•EK•EL	--	--	--	--	--	--
	FA	--	--	--	--	--	--
	FB	--	--	--	--	--	--
	JA	--	--	--	--	--	--
VRT-110-□-□-19** (Input shaft bore ≦ φ19)	DA • DB • DC	124.5	99.5	95.5	□80	25	50
	EB	124.5	99.5	95.5	□90	25	50
	FA	124.5	99.5	95.5	□100	25	50
	FB	134.5	99.5	105.5	□100	35	60
	GB • GD	124.5	99.5	95.5	□115	25	50
	HA	134.5	99.5	105.5	□115	35	60
	--	124.5	99.5	95.5	□130	25	50
	--	139.5	99.5	110.5	□130	40	65
	--	129.5	99.5	100.5	□130	30	55
	HB	134.5	99.5	105.5	□150	35	60
VRT-110-□-□-28** (Input shaft bore ≦ φ28)	FA•FB•FC	141.5	106.5	112.5	□100	35	67
	GA•GB•GC•GD•GE•GF•GG•GH	141.5	106.5	112.5	□115	35	67
	HA•HC•HD	141.5	106.5	112.5	□130	35	67
	HB	151.5	106.5	122.5	□130	45	77
	HF	136.5	106.5	107.5	□130	30	62
	JA•JB•JC•JF	141.5	106.5	112.5	□150	35	67
	JD	161.5	106.5	132.5	□150	55	87
	JE	151.5	106.5	122.5	□150	45	77
	KA•KB•KE	141.5	106.5	112.5	□180	35	67
	KD	151.5	106.5	122.5	□180	45	77
VRT-110-□-□-38** (Input shaft bore ≦ φ38)	HA	162.5	117.5	133.5	□130	45	82
	HB•HE	157.5	117.5	128.5	□130	40	77
	JA	162.5	117.5	133.5	□150	45	82
	KA•KB•KC	162.5	117.5	133.5	□180	45	82
	KD	197.5	117.5	168.5	□180	80	117
	KE	177.5	117.5	148.5	□180	60	97

*1) Single reduction : 1/3~ 1/10

*2) Bushing will be inserted to adapt to motor shaft

For an explanation on the Adapter Flange Code, please turn to page 422.

A more comprehensive adapter flange offering can be found using the NIDEC-SHIMPO Online Selector Tool. The variety is constantly expanding and being updated on the Selector Tool. If you have any questions or need any support, contact NIDEC-SHIMPO.

VRT-110 – 2-Stage Adapter Dimensions

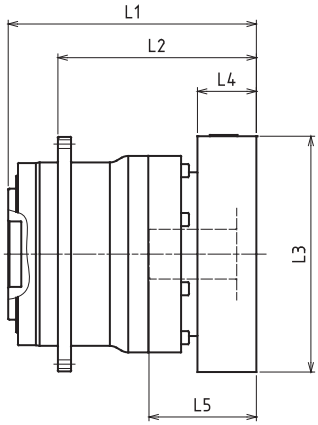

Model Number	**: Adapter Code	2-Stage					
		L1	L*	L2	L3	L4	L5
VRT-110-□-□-14** (Input shaft bore ≦ φ14)	BA•BB•BD•BE•BF•BG•BH•BJ•BK•BP	142	125.5	113	□65	16.5	35
	BC•BH•BM•BN	147	125.5	118	□65	21.5	40
	CA•CC	142	125.5	113	□70	16.5	35
	DA•DB•DC•DD•DF•DH•DJ	142	125.5	113	□80	16.5	35
	EA•EB•EC•EF•EG•EK•EL	142	125.5	113	□90	16.5	35
	FA	142	125.5	113	□100	16.5	35
	FB	152	125.5	123	□100	26.5	45
	JA	157	125.5	128	□150	31.5	50
VRT-110-□-□-19** (Input shaft bore ≦ φ19)	DA • DB • DC	152	127	123	□80	25	50
	EB	152	127	123	□90	25	50
	FA	152	127	123	□100	25	50
	FB	162	127	133	□100	35	60
	GB • GD	152	127	123	□115	25	50
	HA	162	127	133	□115	35	60
	--	152	127	123	□130	25	50
	--	167	127	138	□130	40	65
	--	157	127	128	□130	30	55
	HB	162	127	133	□150	35	60
VRT-110-□-□-28** (Input shaft bore ≦ φ28)	FA•FB•FC	169	134	140	□100	35	67
	GA•GB•GC•GD•GE•GF•GG•GH	169	134	140	□115	35	67
	HA•HC•HD	169	134	140	□130	35	67
	HB	179	134	150	□130	45	77
	HF	164	134	135	□130	30	62
	JA•JB•JC•JF	169	134	140	□150	35	67
	JD	189	134	160	□150	55	87
	JE	179	134	150	□150	45	77
	KA•KB•KE	169	134	140	□180	35	67
	KD	179	134	150	□180	45	77
VRT-110-□-□-38** (Input shaft bore ≦ φ38)	HA	186.5	141.5	157.5	□130	45	82
	HB•HE	181.5	141.5	152.5	□130	40	77
	JA	186.5	141.5	157.5	□150	45	82
	KA•KB•KC	186.5	141.5	157.5	□180	45	82
	KD	221.5	141.5	192.5	□180	80	117
	KE	201.5	141.5	172.5	□180	60	97

*1) Double reduction : 1/15~ 1/100 *2) Bushing will be inserted to adapt to motor shaft

For an explanation on the Adapter Flange Code, please turn to page 422.

A more comprehensive adapter flange offering can be found using the NIDEC-SHIMPO Online Selector Tool. The variety is constantly expanding and being updated on the Selector Tool. If you have any questions or need any support, contact NIDEC-SHIMPO.

VRT-140 – 1-Stage Specifications

Frame Size	**140**					
Stage	**1-Stage**					
Ratio	Unit	Note	4	5	7	10
Nominal Output Torque	[Nm]	*1	240	360	360	240
Maximum Output Torque	[Nm]	*2	700	700	700	470
Emergency Stop Torque	[Nm]	*3	1250	1250	1250	1000
Nominal Input Speed	[rpm]	*4	2000			
Maximum Input Speed	[rpm]	*5	4000			
No Load Running Torque	[Nm]	*13	1.00			
Permitted Radial Load	[N]	*6	8000	8500	9400	10000
Permitted Axial Load	[N]	*7	5600	6000	6700	7400
Maximum Radial Load	[N]	*8	19000			
Maximum Axial Load	[N]	*9	14000			
Moment of Inertia (≤ Ø 19)	[kgcm2]	*10	--	--	--	--
Moment of Inertia (≤ Ø 28)	[kgcm2]	--	11.000	8.400	5.400	4.100
Moment of Inertia (≤ Ø 38)	[kgcm2]	--	19.000	16.000	13.000	12.000
Moment of Inertia (≤ Ø 48)	[kgcm2]	--	41.000	38.000	35.000	34.000
Efficiency	[%]	--	95			
Torsional Rigidity	[Nm/arcmin]	*11	60			
Maximum Torsional Backlash	[Arc-min]	*12	≤ 3			
Noise Level	[dB]	--	≤ 67			
Protection Class	--	*14	IP54 (IP65)			
Ambient Temperature	[°C]	--	0 - 40			
Permitted Housing Temperature	[°C]	--	90			
Weight	[kg]	*15	15			

VRT-140 – 2-Stage Specifications

Frame Size	**140**					
Stage	**2-Stage**					
Ratio	Unit	Note	16	20	25	28
Nominal Output Torque	[Nm]	*1	360	360	360	360
Maximum Output Torque	[Nm]	*2	700	700	700	700
Emergency Stop Torque	[Nm]	*3	1250	1250	1250	1250
Nominal Input Speed	[rpm]	*4	2000			
Maximum Input Speed	[rpm]	*5	4000			
No Load Running Torque	[Nm]	*13	0.54			
Permitted Radial Load	[N]	*6	12000	13000	14000	14000
Permitted Axial Load	[N]	*7	8500	9100	9800	10000
Maximum Radial Load	[N]	*8	19000			
Maximum Axial Load	[N]	*9	14000			
Moment of Inertia (≤ Ø 19)	[kgcm2]	*10	3.800	2.600	2.500	3.400
Moment of Inertia (≤ Ø 28)	[kgcm2]	--	5.800	4.600	4.500	5.400
Moment of Inertia (≤ Ø 38)	[kgcm2]	--	13.000	12.000	12.000	13.000
Moment of Inertia (≤ Ø 48)	[kgcm2]	--	35.000	34.000	34.000	35.000
Efficiency	[%]	--	90			
Torsional Rigidity	[Nm/arcmin]	*11	60			
Maximum Torsional Backlash	[Arc-min]	*12	≤ 3			
Noise Level	[dB]	--	≤ 67			
Protection Class	--	*14	IP54 (IP65)			
Ambient Temperature	[°C]	--	0 - 40			
Permitted Housing Temperature	[°C]	--	90			
Weight	[kg]	*15	17			

VRT-140 – 2-Stage Specifications

Frame Size	140						
Stage	**2-Stage**						
Ratio	Unit	Note	35	40	50	70	100
Nominal Output Torque	[Nm]	*1	360	360	360	360	240
Maximum Output Torque	[Nm]	*2	700	700	700	700	470
Emergency Stop Torque	[Nm]	*3	1250	1250	1250	1250	1000
Nominal Input Speed	[rpm]	*4	2000				
Maximum Input Speed	[rpm]	*5	4000				
No Load Running Torque	[Nm]	*13	0.54				
Permitted Radial Load	[N]	*6	15000	16000	17000	19000	19000
Permitted Axial Load	[N]	*7	11000	11000	12000	13000	14000
Maximum Radial Load	[N]	*8	19000				
Maximum Axial Load	[N]	*9	14000				
Moment of Inertia (≤ Ø 19)	[kgcm2]	*10	2.400	1.200	1.100	1.100	1.100
Moment of Inertia (≤ Ø 28)	[kgcm2]	--	4.400	3.100	3.100	3.100	3.100
Moment of Inertia (≤ Ø 38)	[kgcm2]	--	12.000	11.000	11.000	11.000	11.000
Moment of Inertia (≤ Ø 48)	[kgcm2]	--	34.000	33.000	33.000	33.000	33.000
Efficiency	[%]	--	90				
Torsional Rigidity	[Nm/arcmin]	*11	60				
Maximum Torsional Backlash	[Arc-min]	*12	≤ 3				
Noise Level	[dB]	--	≤ 67				
Protection Class	--	*14	IP54 (IP65)				
Ambient Temperature	[°C]	--	0 - 40				
Permitted Housing Temperature	[°C]	--	90				
Weight	[kg]	*15	17				

*1) At nominal input speed, service life is 20,000 hours
*2) The maximum torque when starting or stopping operation
*3) The maximum torque allowed under a stress situation (Permitted 1,000 times during service life)
*4) The average input speed
*5) The maximum intermittent input speed
*6) This is the torque at no load applied on the input shaft. The input speed is 2,000 rpm for VRT140
*7) At this load and nominal input speed, service life will be 20,000 hours. (The radial load applied to the output side bearing)
*8) At this load and nominal input speed, service life will be 20,000 hours. (The axial load applied to the output flange center)
*9) The maximum radial load that the reducer can accept
*10) The maximum axial load that the reducer can accept
*11) The efficiency at the nominal torque rating
*12) This does not include the lost motion
*13) Contact NIDEC-SHIMPO for the testing conditions and environment
*14) IP65 (wash-down) is available as an option. Contact NIDEC-SHIMPO for more details and our food grade options
*15) The weight may vary slightly between models

VRT-140 – 1-Stage Dimensions

Input shaft bore ≦ ϕ 28

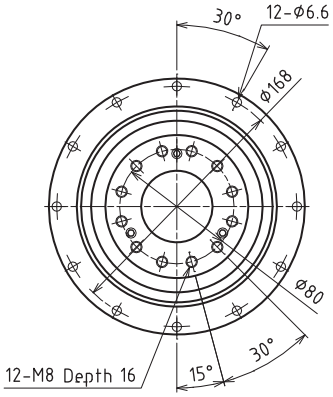

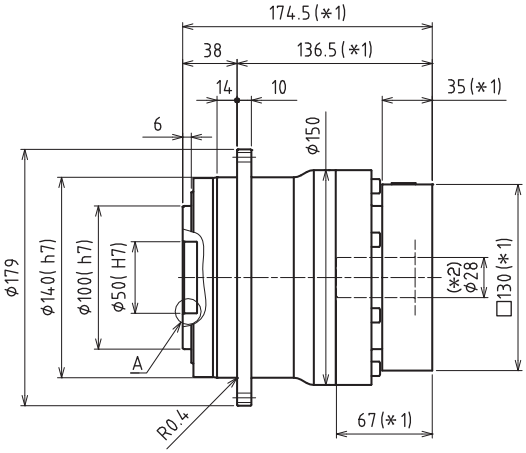

Input shaft bore ≦ ϕ 38

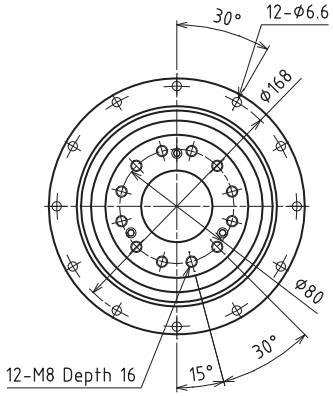

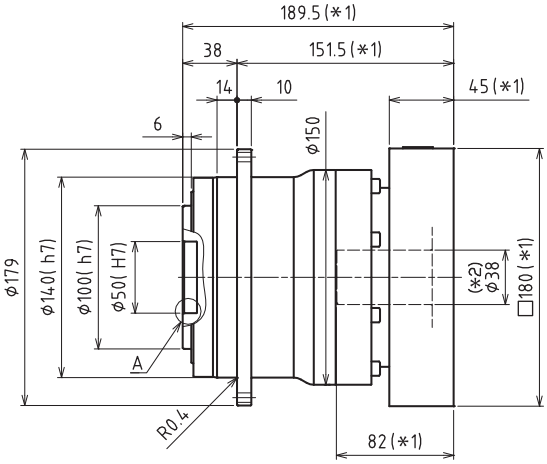

Input shaft bore ≦ ϕ 48

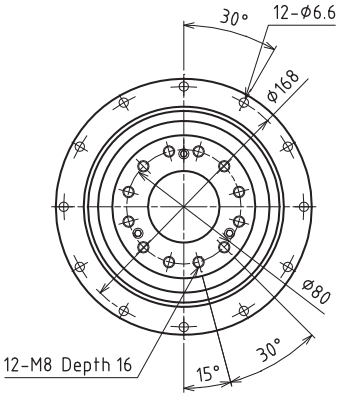

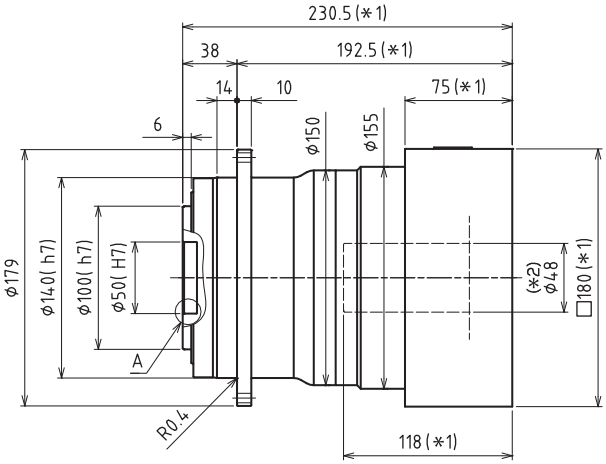

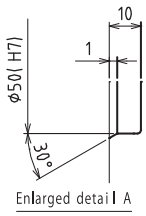

*1) Length will vary depending on motor.

*2) Bushing will be inserted to adapt to motor shaft

VRT-140 – 2-Stage Dimensions

Input shaft bore ≦ϕ19

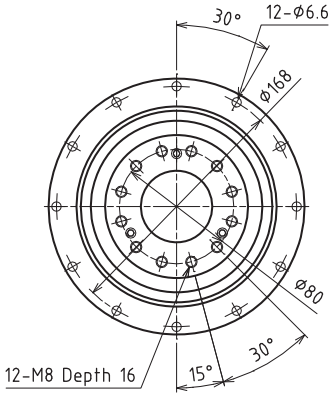

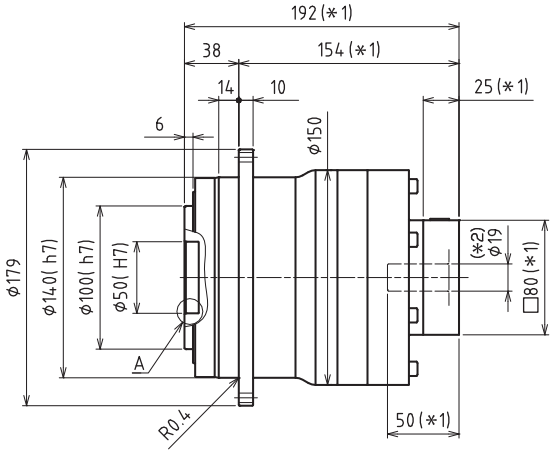

Input shaft bore ≦ϕ28

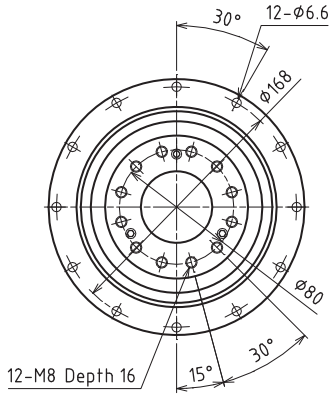

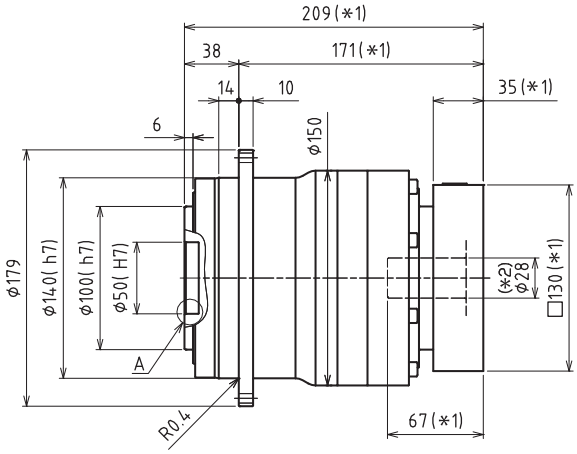

Input shaft bore ≦ϕ38

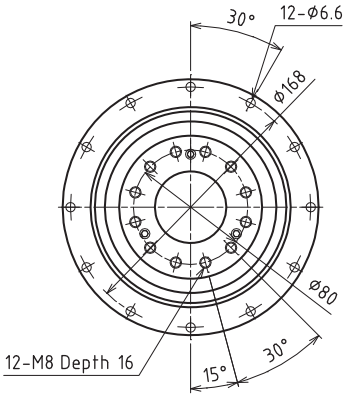

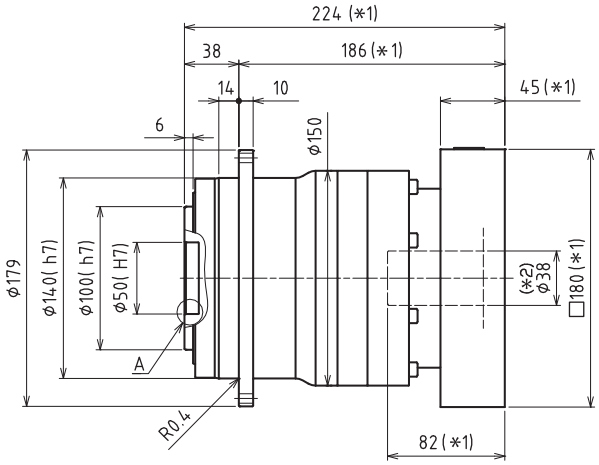

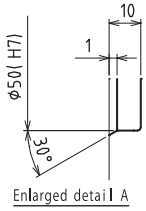

*1) Length will vary depending on motor.

*2) Bushing will be inserted to adapt to motor shaft

VRT-140 – 1-Stage Adapter Dimensions

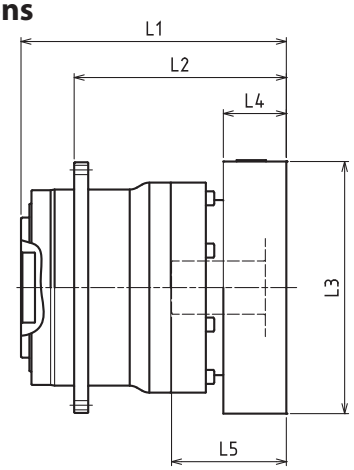

Model Number	**: Adapter Code	1-Stage					
		L1	L*	L2	L3	L4	L5
VRT-140-□-□-19** (Input shaft bore ≦ φ19)	DA•DB•DC	--	--	--	--	--	--
	EB•ED	--	--	--	--	--	--
	FA	--	--	--	--	--	--
	FB	--	--	--	--	--	--
	GB•GD•GJ	--	--	--	--	--	--
	HA	--	--	--	--	--	--
	HB	--	--	--	--	--	--
	JA	--	--	--	--	--	--
VRT-140-□-□-28** (Input shaft bore ≦ φ28)	FA•FB•FC	154	119	116	□100	35	67
	GA•GB•GC•GD•GE•GF•GG•GH	154	119	116	□115	35	67
	HA•HC•HD	154	119	116	□130	35	67
	HB	164	119	126	□130	45	77
	HF	149	119	111	□130	30	62
	JA•JB•JC•JF	154	119	116	□150	35	67
	KA•KB•KE	154	119	116	□180	35	67
	LA	154	119	116	□200	35	67
	LB	164	119	126	□200	45	77
	MA	154	119	116	□220	35	67
	MB	164	119	126	□220	45	77
VRT-140-□-□-38** (Input shaft bore ≦ φ38)	HA	169	124	131	□130	45	82
	HB•HE	164	124	126	□130	40	77
	JA	169	124	131	□150	45	82
	KA•KB•KC	169	124	131	□180	45	82
	KD	204	124	166	□180	80	117
	KE	184	124	146	□180	60	97
	LB	179	124	141	□200	55	92
	MA•MB	169	124	131	□220	45	82
	MC	184	124	146	□220	60	97
	MD	179	124	141	□220	55	92
VRT-140-□-□-48** (Input shaft bore ≦ φ48)	KA	210	135	172	□180	75	118
	KB•KC	190	135	152	□180	55	98
	LA	190	135	152	□200	55	98
	MA	190	135	152	□220	55	98
	MB	210	135	172	□220	75	118

*1) Single reduction : 1/3~ 1/10 *2) Bushing will be inserted to adapt to motor shaft

For an explanation on the Adapter Flange Code, please turn to page 422.

A more comprehensive adapter flange offering can be found using the NIDEC-SHIMPO Online Selector Tool. The variety is constantly expanding and being updated on the Selector Tool. If you have any questions or need any support, contact NIDEC-SHIMPO.

VRT-140 – 2-Stage Adapter Dimensions

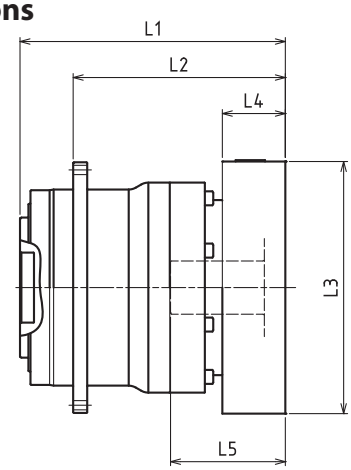

Model Number	**: Adapter Code	2-Stage					
		L1	L*	L2	L3	L4	L5
VRT-140-□-□-19** (Input shaft bore ≦ φ19)	DA•DB•DC	171.5	146.5	133.5	□80	25	50
	EB•ED	171.5	146.5	133.5	□90	25	50
	FA	171.5	146.5	133.5	□100	25	50
	FB	181.5	146.5	143.5	□100	35	60
	GB•GD•GJ	171.5	146.5	133.5	□115	25	50
	HA	171.5	146.5	133.5	□130	25	50
	HB	186.5	146.5	148.5	□130	40	65
	JA	181.5	146.5	143.5	□150	35	60
VRT-140-□-□-28** (Input shaft bore ≦ φ28)	FA•FB•FC	188.5	153.5	150.5	□100	35	67
	GA•GB•GC•GD•GE•GF•GG•GH	188.5	153.5	150.5	□115	35	67
	HA•HC•HD	188.5	153.5	150.5	□130	35	67
	HB	198.5	153.5	160.5	□130	45	77
	HF	183.5	153.5	145.5	□130	30	62
	JA•JB•JC•JF	188.5	153.5	150.5	□150	35	67
	KA•KB•KE	188.5	153.5	150.5	□180	35	67
	LA	188.5	153.5	150.5	□200	35	67
	LB	198.5	153.5	160.5	□200	45	77
	MA	188.5	153.5	150.5	□220	35	67
	MB	198.5	153.5	160.5	□220	45	77
VRT-140-□-□-38** (Input shaft bore ≦ φ38)	HA	203.5	158.5	165.5	□130	45	82
	HB•HE	198.5	158.5	160.5	□130	40	77
	JA	203.5	158.5	165.5	□150	45	82
	KA•KB•KC	203.5	158.5	165.5	□180	45	82
	KD	238.5	158.5	200.5	□180	80	117
	KE	218.5	158.5	180.5	□180	60	97
	LB	213.5	158.5	175.5	□200	55	92
	MA•MB	203.5	158.5	165.5	□220	45	82
	MC	218.5	158.5	180.5	□220	60	97
	MD	213.5	158.5	175.5	□220	55	92
VRT-140-□-□-48** (Input shaft bore ≦ φ48)	KA	244.5	169.5	206.5	□180	75	118
	KB•KC	224.5	169.5	186.5	□180	55	98
	LA	224.5	169.5	186.5	□200	55	98
	MA	224.5	169.5	186.5	□220	55	98
	MB	244.5	169.5	206.5	□220	75	118

*1) Double reduction : 1/15~ 1/100 *2) Bushing will be inserted to adapt to motor shaft

For an explanation on the Adapter Flange Code, please turn to page 422.

A more comprehensive adapter flange offering can be found using the NIDEC-SHIMPO Online Selector Tool. The variety is constantly expanding and being updated on the Selector Tool. If you have any questions or need any support, contact NIDEC-SHIMPO.

VRT-200 – 1-Stage Specifications

Frame Size	**200**					
Stage	**1-Stage**					
Ratio	Unit	Note	4	5	7	10
Nominal Output Torque	[Nm]	*1	750	750	750	500
Maximum Output Torque	[Nm]	*2	1400	1400	1400	970
Emergency Stop Torque	[Nm]	*3	2750	2750	2750	2200
Nominal Input Speed	[rpm]	*4	1500			
Maximum Input Speed	[rpm]	*5	3000			
No Load Running Torque	[Nm]	*13	1.9			
Permitted Radial Load	[N]	*6	18000	19000	21000	23000
Permitted Axial Load	[N]	*7	12000	13000	14000	16000
Maximum Radial Load	[N]	*8	40000			
Maximum Axial Load	[N]	*9	30000			
Moment of Inertia (≤ Ø 28)	[kgcm2]	*10	--	--	--	--
Moment of Inertia (≤ Ø 38)	[kgcm2]	--	54.000	39.000	25.000	18.000
Moment of Inertia (≤ Ø 48)	[kgcm2]	--	76.000	61.000	47.000	40.000
Moment of Inertia (≤ Ø 65)	[kgcm2]	--	140.000	120.000	110.000	100.000
Efficiency	[%]	--	95			
Torsional Rigidity	[Nm/arcmin]	*11	175			
Maximum Torsional Backlash	[Arc-min]	*12	≤ 3			
Noise Level	[dB]	--	≤ 67			
Protection Class	--	*14	IP54 (IP65)			
Ambient Temperature	[°C]	--	0 - 40			
Permitted Housing Temperature	[°C]	--	90			
Weight	[kg]	*15	42			

VRT-200 – 2-Stage Specifications

Frame Size	**200**					
Stage	**2-Stage**					
Ratio	Unit	Note	16	20	25	28
Nominal Output Torque	[Nm]	*1	750	750	750	750
Maximum Output Torque	[Nm]	*2	1400	1400	1400	1400
Emergency Stop Torque	[Nm]	*3	2750	2750	2750	2750
Nominal Input Speed	[rpm]	*4	1500			
Maximum Input Speed	[rpm]	*5	3000			
No Load Running Torque	[Nm]	*13	1.3			
Permitted Radial Load	[N]	*6	27000	28000	30000	31000
Permitted Axial Load	[N]	*7	18000	19000	21000	21000
Maximum Radial Load	[N]	*8	40000			
Maximum Axial Load	[N]	*9	30000			
Moment of Inertia (≤ Ø 28)	[kgcm2]	*10	13.000	9.400	8.800	11.000
Moment of Inertia (≤ Ø 38)	[kgcm2]	--	21.000	17.000	16.000	19.000
Moment of Inertia (≤ Ø 48)	[kgcm2]	--	43.000	39.000	38.000	41.000
Moment of Inertia (≤ Ø 65)	[kgcm2]	--	--	--	--	--
Efficiency	[%]	--	90			
Torsional Rigidity	[Nm/arcmin]	*11	175			
Maximum Torsional Backlash	[Arc-min]	*12	≤ 3			
Noise Level	[dB]	--	≤ 67			
Protection Class	--	*14	IP54 (IP65)			
Ambient Temperature	[°C]	--	0 - 40			
Permitted Housing Temperature	[°C]	--	90			
Weight	[kg]	*15	43			

VRT-200 – 2-Stage Specifications

Frame Size	200						
Stage	2-Stage						
Ratio	Unit	Note	35	40	50	70	100
Nominal Output Torque	[Nm]	*1	750	750	750	750	500
Maximum Output Torque	[Nm]	*2	1400	1400	1400	1400	970
Emergency Stop Torque	[Nm]	*3	2750	2750	2750	2750	2200
Nominal Input Speed	[rpm]	*4	1500				
Maximum Input Speed	[rpm]	*5	3000				
No Load Running Torque	[Nm]	*13	1.3				
Permitted Radial Load	[N]	*6	34000	35000	37000	40000	40000
Permitted Axial Load	[N]	*7	23000	24000	25000	28000	30000
Maximum Radial Load	[N]	*8	40000				
Maximum Axial Load	[N]	*9	30000				
Moment of Inertia (≤ Ø 28)	[kgcm2]	*10	8.200	4.400	4.200	4.100	4.000
Moment of Inertia (≤ Ø 38)	[kgcm2]	--	16.000	12.000	12.000	12.000	12.000
Moment of Inertia (≤ Ø 48)	[kgcm2]	--	38.000	34.000	34.000	34.000	34.000
Moment of Inertia (≤ Ø 65)	[kgcm2]	--	--	--	--	--	--
Efficiency	[%]	--	90				
Torsional Rigidity	[Nm/arcmin]	*11	175				
Maximum Torsional Backlash	[Arc-min]	*12	≤ 3				
Noise Level	[dB]	--	≤ 67				
Protection Class	--	*14	IP54 (IP65)				
Ambient Temperature	[°C]	--	0 - 40				
Permitted Housing Temperature	[°C]	--	90				
Weight	[kg]	*15	43				

*1) At nominal input speed, service life is 20,000 hours
*2) The maximum torque when starting or stopping operation
*3) The maximum torque allowed under a stress situation (Permitted 1,000 times during service life)
*4) The average input speed
*5) The maximum intermittent input speed
*6) This is the torque at no load applied on the input shaft. The input speed is 1,500 rpm for VRT 200
*7) At this load and nominal input speed, service life will be 20,000 hours. (The radial load applied to the output side bearing)
*8) At this load and nominal input speed, service life will be 20,000 hours. (The axial load applied to the output flange center)
*9) The maximum radial load that the reducer can accept
*10) The maximum axial load that the reducer can accept
*11) The efficiency at the nominal torque rating
*12) This does not include the lost motion
*13) Contact NIDEC-SHIMPO for the testing conditions and environment
*14) IP65 (wash-down) is available as an option. Contact NIDEC-SHIMPO for more details and our food grade options
*15) The weight may vary slightly between models

VRT-200 – 1-Stage Dimensions

Input shaft bore ≦ϕ38

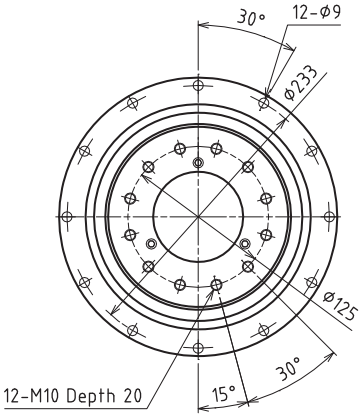

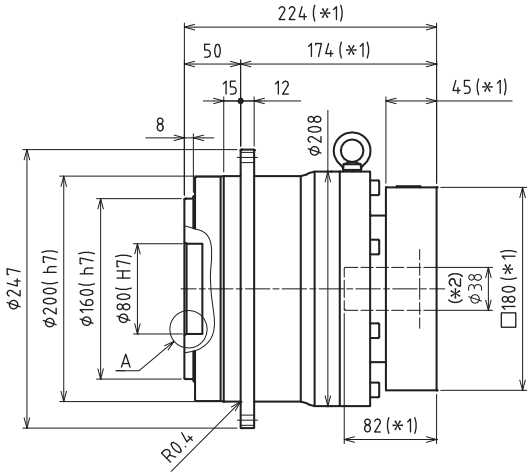

Input shaft bore ≦ϕ48

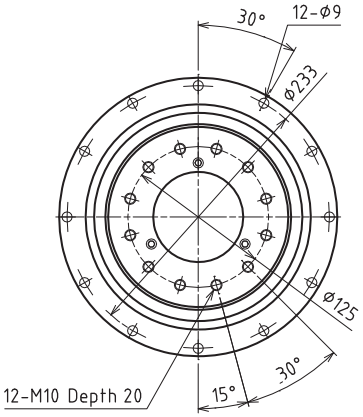

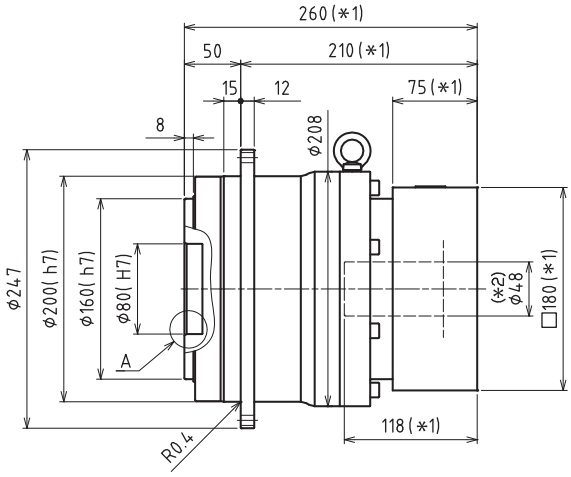

Input shaft bore ≦ϕ65

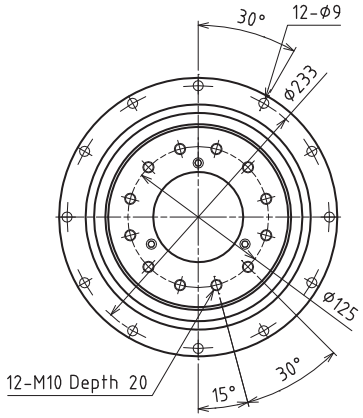

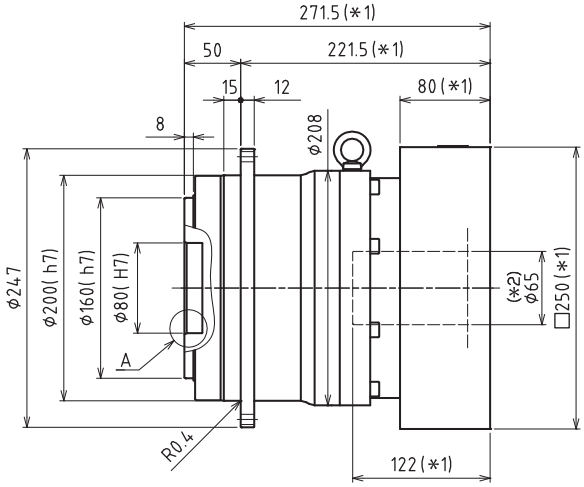

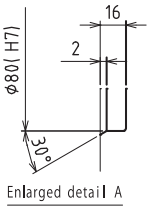

Enlarged detail A

*1) Length will vary depending on motor

*2) Bushing will be inserted to adapt to motor shaft

VRT-200 – 2-Stage Dimensions

Input shaft bore ≦ϕ28

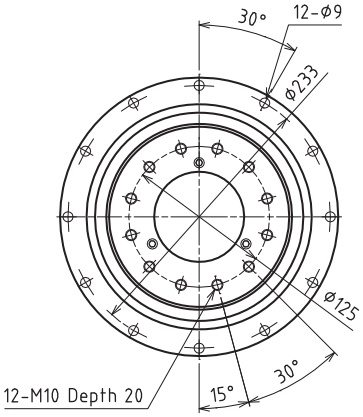

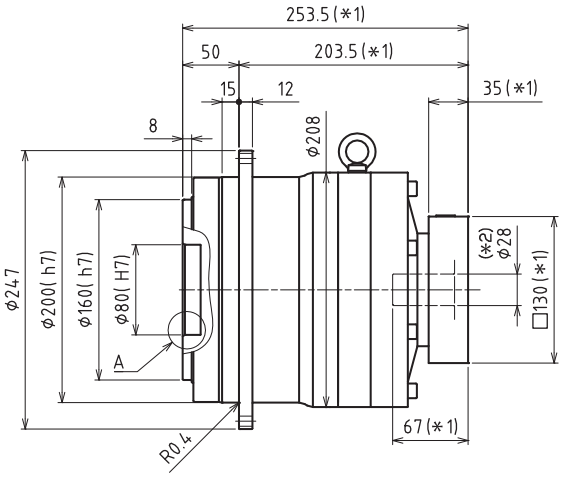

Input shaft bore ≦ϕ38

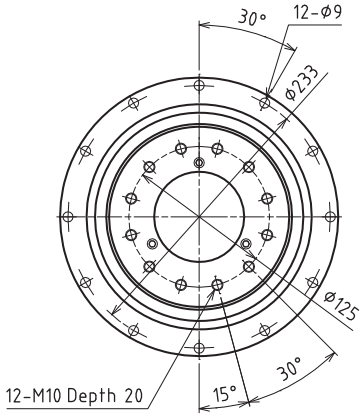

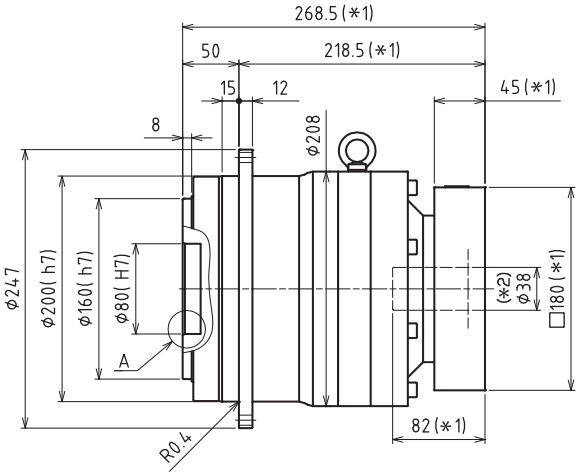

Input shaft bore ≦ϕ48

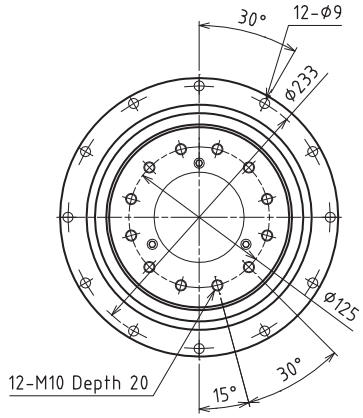

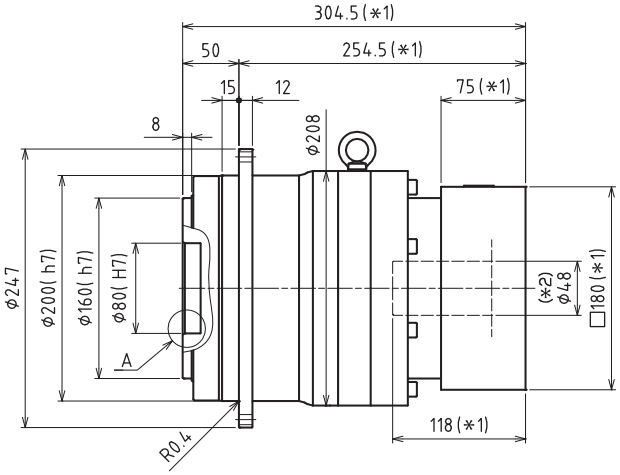

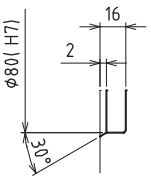

Enlarged detail A

*1) Length will vary depending on motor

*2) Bushing will be inserted to adapt to motor shaft

VRT-200 – 1-Stage Adapter Dimensions

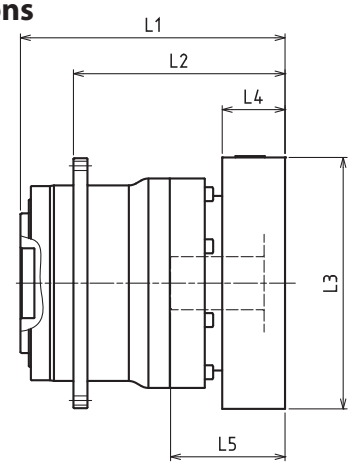

Model Number	**: Adapter Code	1-Stage					
		L1	L*	L2	L3	L4	L5
VRT-200-□-□-28** (Input shaft bore ≦ φ28)	FA•FB•FC	--	--	--	--	--	--
	GA•GB•GC•GD•GE•GF•GG•GH	--	--	--	--	--	--
	HA•HC•HD	--	--	--	--	--	--
	HB	--	--	--	--	--	--
	HF	--	--	--	--	--	--
	JA•JB•JC•JF	--	--	--	--	--	--
	KA•KB•KE	--	--	--	--	--	--
	LA	--	--	--	--	--	--
	LB	--	--	--	--	--	--
	MA	--	--	--	--	--	--
	MB	--	--	--	--	--	--
VRT-200-□-□-38** (Input shaft bore ≦ φ38)	HA	192	147	142	□130	45	82
	HB•HE	187	147	137	□130	40	77
	JA	192	147	142	□150	45	82
	KA•KB•KC	192	147	142	□180	45	82
	KD	227	147	177	□180	80	117
	KE	207	147	157	□180	60	97
	LB	202	147	152	□200	55	92
	MA•MB	192	147	142	□220	45	82
	MC	207	147	157	□220	60	97
	MD	202	147	152	□220	55	92
	NA	192	147	142	□250	45	82
VRT-200-□-□-48** (Input shaft bore ≦ φ48)	KA	228	153	178	□180	75	118
	KB•KC	208	153	158	□180	55	98
	LA	208	153	158	□200	55	98
	MA	208	153	158	□220	55	98
	MB	228	153	178	□220	75	118
	NA	228	153	178	□250	75	118
	PA	228	153	178	□280	75	118
VRT-200-□-□-65** (Input shaft bore ≦ φ65)	MA•MB•MC•MD	239.5	159.5	189.5	□220	80	122
	NA•NC	239.5	159.5	189.5	□250	80	122
	NB•ND	269.5	159.5	219.5	□250	110	152
	PA	259.5	159.5	209.5	□280	100	142
	PB	269.5	159.5	219.5	□280	110	152

*1) Single reduction : 1/3~ 1/10 *2) Bushing will be inserted to adapt to motor shaft

For an explanation on the Adapter Flange Code, please turn to page 422.

A more comprehensive adapter flange offering can be found using the NIDEC-SHIMPO Online Selector Tool. The variety is constantly expanding and being updated on the Selector Tool. If you have any questions or need any support, contact NIDEC-SHIMPO.

VRT-200 – 2-Stage Adapter Dimensions

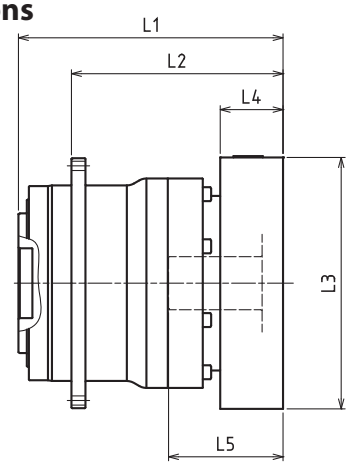

Model Number	**: Adapter Code	2-Stage					
		L1	L*	L2	L3	L4	L5
VRT-200-□-□-28** (Input shaft bore ≦ φ28)	FA•FB•FC	221.5	186.5	171.5	□100	35	67
	GA•GB•GC•GD•GE•GF•GG•GH	221.5	186.5	171.5	□115	35	67
	HA•HC•HD	221.5	186.5	171.5	□130	35	67
	HB	231.5	186.5	181.5	□130	45	77
	HF	216.5	186.5	166.5	□130	30	62
	JA•JB•JC•JF	221.5	186.5	171.5	□150	35	67
	KA•KB•KE	221.5	186.5	171.5	□180	35	67
	LA	221.5	186.5	171.5	□200	35	67
	LB	231.5	186.5	181.5	□200	45	77
	MA	221.5	186.5	171.5	□220	35	67
	MB	231.5	186.5	181.5	□220	45	77
VRT-200-□-□-38** (Input shaft bore ≦ φ38)	HA	236.5	191.5	186.5	□130	45	82
	HB•HE	231.5	191.5	181.5	□130	40	77
	JA	236.5	191.5	186.5	□150	45	82
	KA•KB•KC	236.5	191.5	186.5	□180	45	82
	KD	271.5	191.5	221.5	□180	80	117
	KE	251.5	191.5	201.5	□180	60	97
	LB	246.5	191.5	196.5	□200	55	92
	MA•MB	236.5	191.5	186.5	□220	45	82
	MC	251.5	191.5	201.5	□220	60	97
	MD	246.5	191.5	196.5	□220	55	92
	NA	236.5	191.5	186.5	□250	45	82
VRT-200-□-□-48** (Input shaft bore ≦ φ48)	KA	272.5	197.5	222.5	□180	75	118
	KB•KC	252.5	197.5	202.5	□180	55	98
	LA	252.5	197.5	202.5	□200	55	98
	MA	252.5	197.5	202.5	□220	55	98
	MB	272.5	197.5	222.5	□220	75	118
	NA	272.5	197.5	222.5	□250	75	118
	PA	272.5	197.5	222.5	□280	75	118
VRT-200-□-□-65** (Input shaft bore ≦ φ65)	MA•MB•MC•MD	--	--	--	--	--	--
	NA•NC	--	--	--	--	--	--
	NB•ND	--	--	--	--	--	--
	PA	--	--	--	--	--	--
	PB	--	--	--	--	--	--

*1) Double reduction : 1/15~ 1/100 *2) Bushing will be inserted to adapt to motor shaft

For an explanation on the Adapter Flange Code, please turn to page 422.

A more comprehensive adapter flange offering can be found using the NIDEC-SHIMPO Online Selector Tool. The variety is constantly expanding and being updated on the Selector Tool. If you have any questions or need any support, contact NIDEC-SHIMPO.

VRT-255 – 1-Stage Specifications

Frame Size	**255**					
Stage	**1-Stage**					
Ratio	Unit	Note	4	5	7	10
Nominal Output Torque	[Nm]	*1	2400	2400	2400	1600
Maximum Output Torque	[Nm]	*2	3700	3700	3700	2600
Emergency Stop Torque	[Nm]	*3	8000	8000	8000	6000
Nominal Input Speed	[rpm]	*4	1000			
Maximum Input Speed	[rpm]	*5	2000			
No Load Running Torque	[Nm]	*13	2.5			
Permitted Radial Load	[N]	*6	31000	33000	36000	40000
Permitted Axial Load	[N]	*7	22000	24000	26000	29000
Maximum Radial Load	[N]	*8	64000			
Maximum Axial Load	[N]	*9	48000			
Moment of Inertia (≤ Ø 48)	[kgcm2]	*10	--	--	--	--
Moment of Inertia (≤ Ø 65)	[kgcm2]	--	200	170	130	110
Efficiency	[%]	--	95			
Torsional Rigidity	[Nm/arcmin]	*11	550			
Maximum Torsional Backlash	[Arc-min]	*12	≤ 3			
Noise Level	[dB]	--	≤ 62			
Protection Class	--	*14	IP54 (IP65)			
Ambient Temperature	[°C]	--	0 - 40			
Permitted Housing Temperature	[°C]	--	90			
Weight	[kg]	*15	84			

VRT-255 – 2-Stage Specifications

Frame Size	**255**					
Stage	**2-Stage**					
Ratio	Unit	Note	16	20	25	28
Nominal Output Torque	[Nm]	*1	2400	2400	2400	2400
Maximum Output Torque	[Nm]	*2	3700	3700	3700	3700
Emergency Stop Torque	[Nm]	*3	8000	8000	8000	8000
Nominal Input Speed	[rpm]	*4	1000			
Maximum Input Speed	[rpm]	*5	2000			
No Load Running Torque	[Nm]	*13	1.0			
Permitted Radial Load	[N]	*6	46000	49000	53000	55000
Permitted Axial Load	[N]	*7	34000	36000	38000	40000
Maximum Radial Load	[N]	*8	64000			
Maximum Axial Load	[N]	*9	48000			
Moment of Inertia (≤ Ø 48)	[kgcm2]	*10	64.0	53.0	51.0	59.0
Moment of Inertia (≤ Ø 65)	[kgcm2]	--	--	--	--	--
Efficiency	[%]	--	90			
Torsional Rigidity	[Nm/arcmin]	*11	550			
Maximum Torsional Backlash	[Arc-min]	*12	≤ 3			
Noise Level	[dB]	--	≤ 62			
Protection Class	--	*14	IP54 (IP65)			
Ambient Temperature	[°C]	--	0 - 40			
Permitted Housing Temperature	[°C]	--	90			
Weight	[kg]	*15	89			

VRT-255 – 2-Stage Specifications

Frame Size	255						
Stage	**2-Stage**						
Ratio	Unit	Note	35	40	50	70	100
Nominal Output Torque	[Nm]	*1	2400	2400	2400	2400	1600
Maximum Output Torque	[Nm]	*2	3700	3700	3700	3700	1800
Emergency Stop Torque	[Nm]	*3	8000	8000	8000	8000	6000
Nominal Input Speed	[rpm]	*4	1000				
Maximum Input Speed	[rpm]	*5	2000				
No Load Running Torque	[Nm]	*13	1.0				
Permitted Radial Load	[N]	*6	59000	61000	64000	64000	64000
Permitted Axial Load	[N]	*7	42000	44000	47000	48000	48000
Maximum Radial Load	[N]	*8	64000				
Maximum Axial Load	[N]	*9	48000				
Moment of Inertia (≤ Ø 48)	[kgcm2]	*10	50.0	38.0	38.0	37.0	37.0
Moment of Inertia (≤ Ø 65)	[kgcm2]	--	--	--	--	--	--
Efficiency	[%]	--	90				
Torsional Rigidity	[Nm/arcmin]	*11	550				
Maximum Torsional Backlash	[Arc-min]	*12	≤ 3				
Noise Level	[dB]	--	≤ 62				
Protection Class	--	*14	IP54 (IP65)				
Ambient Temperature	[°C]	--	0 - 40				
Permitted Housing Temperature	[°C]	--	90				
Weight	[kg]	*15	89				

*1) At nominal input speed, service life is 20,000 hours
*2) The maximum torque when starting or stopping operation
*3) The maximum torque allowed under a stress situation (Permitted 1,000 times during service life)
*4) The average input speed
*5) The maximum intermittent input speed
*6) This is the torque at no load applied on the input shaft. The input speed is 1,000 rpm for 255
*7) At this load and nominal input speed, service life will be 20,000 hours. (The radial load applied to the output side bearing)
*8) At this load and nominal input speed, service life will be 20,000 hours. (The axial load applied to the output flange center)
*9) The maximum radial load that the reducer can accept
*10) The maximum axial load that the reducer can accept
*11) The efficiency at the nominal torque rating
*12) This does not include the lost motion
*13) Contact NIDEC-SHIMPO for the testing conditions and environment
*14) IP65 (wash-down) is available as an option. Contact NIDEC-SHIMPO for more details and our food grade options
*15) The weight may vary slightly between models

VRT-255 – 1-Stage Dimensions

Input shaft bore ≦ ϕ 65

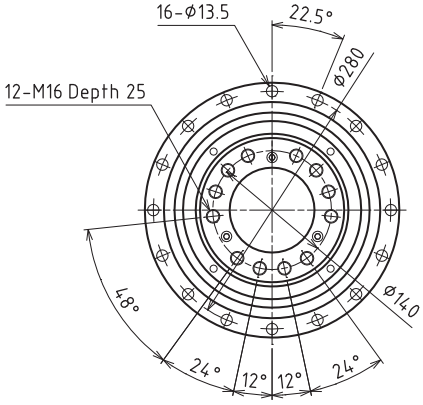

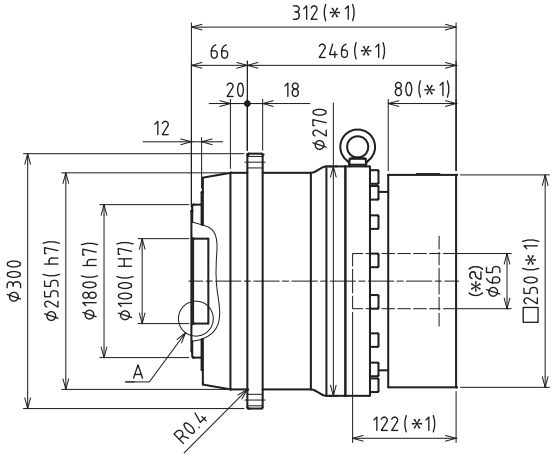

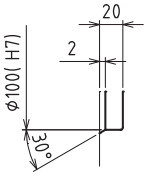

Enlarged detail A

*1) Length will vary depending on motor

*2) Bushing will be inserted to adapt to motor shaft

VRT-255 – 2-Stage Dimensions

Input shaft bore ≦ϕ48

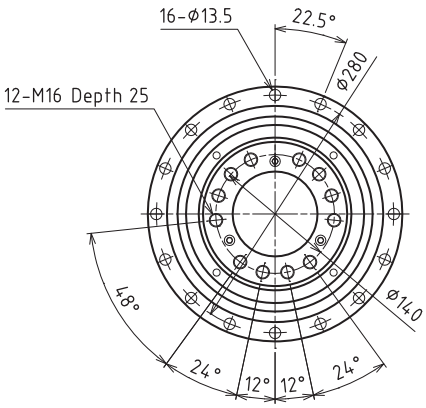

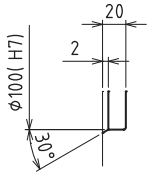

Enlarged detail A

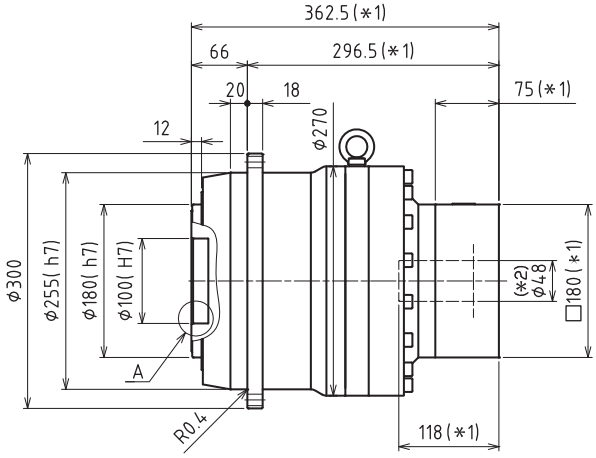

*1) Length will vary depending on motor

*2) Bushing will be inserted to adapt to motor shaft

VRT

VRT-255 – 1-Stage Adapter Dimensions

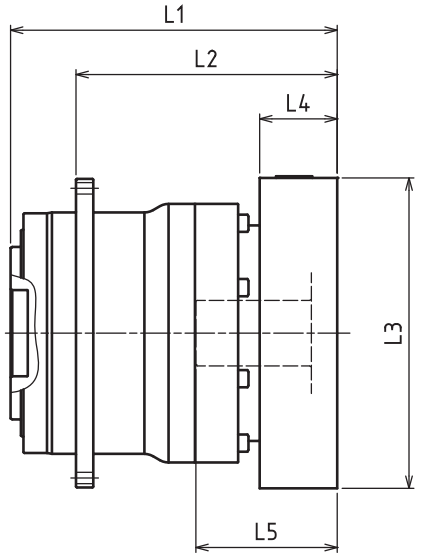

Model Number	**: Adapter Code	1-Stage					
		L1	L*	L2	L3	L4	L5
VRT-255-□-□-48** (Input shaft bore ≦ φ48)	KA	--	--	--	--	--	--
	KB•KC	--	--	--	--	--	--
	LA	--	--	--	--	--	--
	MA	--	--	--	--	--	--
	MB	--	--	--	--	--	--
	NA	--	--	--	--	--	--
	PA	--	--	--	--	--	--
VRT-255-□-□-65** (Input shaft bore ≦ φ65)	MA•MB•MC•MD	272	192	206	□220	80	122
	NA•NC	272	192	206	□250	80	122
	NB•ND	302	192	236	□250	110	152
	PA	292	192	226	□280	100	142
	PB	302	192	236	□280	110	152
	QA•QB	292	192	226	□320	100	142

*1) Single reduction : 1/4 - 1/10

*2) Bushing will be inserted to adapt to motor shaft

For an explanation on the Adapter Flange Code, please turn to page 422.

A more comprehensive adapter flange offering can be found using the NIDEC-SHIMPO Online Selector Tool. The variety is constantly expanding and being updated on the Selector Tool. If you have any questions or need any support, contact NIDEC-SHIMPO.

VRT-255 – 2-Stage Adapter Dimensions

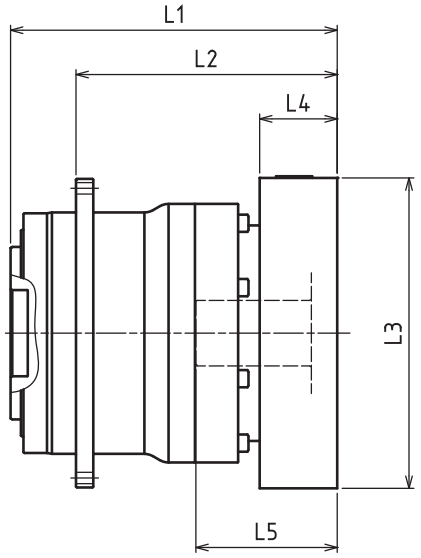

Model Number	**: Adapter Code	2-Stage					
		L1	L*	L2	L3	L4	L5
VRT-255-□-□-48** (Input shaft bore ≦ φ48)	KA	322.5	247.5	256.5	□180	75	118
	KB•KC	302.5	247.5	236.5	□180	55	98
	LA	302.5	247.5	236.5	□200	55	98
	MA	302.5	247.5	236.5	□220	55	98
	MB	322.5	247.5	256.5	□220	75	118
	NA	322.5	247.5	256.5	□250	75	118
	PA	322.5	247.5	256.5	□280	75	118
VRT-255-□-□-65** (Input shaft bore ≦ φ65)	MA•MB•MC•MD	--	--	--	--	--	--
	NA•NC	--	--	--	--	--	--
	NB•ND	--	--	--	--	--	--
	PA	--	--	--	--	--	--
	PB	--	--	--	--	--	--
	QA•QB	--	--	--	--	--	--

*1) Double reduction : 1/16 - 1/100

*2) Bushing will be inserted to adapt to motor shaft

For an explanation on the Adapter Flange Code, please turn to page 422.

A more comprehensive adapter flange offering can be found using the NIDEC-SHIMPO Online Selector Tool. The variety is constantly expanding and being updated on the Selector Tool. If you have any questions or need any support, contact NIDEC-SHIMPO.

VRT-285 – 1-Stage Specifications

Frame Size	**285**					
Stage	**1-Stage**					
Ratio	Unit	Note	4	5	7	10
Nominal Output Torque	[Nm]	*1	3300	3300	3300	2200
Maximum Output Torque	[Nm]	*2	5300	5300	5300	3700
Emergency Stop Torque	[Nm]	*3	12000	12000	12000	10000
Nominal Input Speed	[rpm]	*4	1000			
Maximum Input Speed	[rpm]	*5	2000			
No Load Running Torque	[Nm]	*13	2.7			
Permitted Radial Load	[N]	*6	40000	42000	47000	52000
Permitted Axial Load	[N]	*7	34000	36000	40000	45000
Maximum Radial Load	[N]	*8	86000			
Maximum Axial Load	[N]	*9	64000			
Moment of Inertia (≤ Ø 48)	[kgcm2]	*10	--	--	--	--
Moment of Inertia (≤ Ø 65)	[kgcm2]	--	250	200	140	120
Efficiency	[%]	--	95			
Torsional Rigidity	[Nm/arcmin]	*11	850			
Maximum Torsional Backlash	[Arc-min]	*12	≤ 3			
Noise Level	[dB]	--	≤ 63			
Protection Class	--	*14	IP54 (IP65)			
Ambient Temperature	[°C]	--	0 - 40			
Permitted Housing Temperature	[°C]	--	90			
Weight	[kg]	*15	110			

VRT-285 – 2-Stage Specifications

Frame Size	**285**					
Stage	**2-Stage**					
Ratio	Unit	Note	16	20	25	28
Nominal Output Torque	[Nm]	*1	2750	3300	3300	3300
Maximum Output Torque	[Nm]	*2	5300	5300	5300	5300
Emergency Stop Torque	[Nm]	*3	12000	12000	12000	12000
Nominal Input Speed	[rpm]	*4	1000			
Maximum Input Speed	[rpm]	*5	2000			
No Load Running Torque	[Nm]	*13	0.6			
Permitted Radial Load	[N]	*6	60000	64000	69000	71000
Permitted Axial Load	[N]	*7	51000	55000	59000	61000
Maximum Radial Load	[N]	*8	86000			
Maximum Axial Load	[N]	*9	64000			
Moment of Inertia (≤ Ø 48)	[kgcm2]	*10	48.0	42.0	41.0	42.0
Moment of Inertia (≤ Ø 65)	[kgcm2]	--	--	--	--	--
Efficiency	[%]	--	90			
Torsional Rigidity	[Nm/arcmin]	*11	850			
Maximum Torsional Backlash	[Arc-min]	*12	≤ 3			
Noise Level	[dB]	--	≤ 63			
Protection Class	--	*14	IP54 (IP65)			
Ambient Temperature	[°C]	--	0 - 40			
Permitted Housing Temperature	[°C]	--	90			
Weight	[kg]	*15	120			

VRT-285 – 2-Stage Specifications

Frame Size	**285**						
Stage	**2-Stage**						
Ratio	Unit	Note	35	40	50	70	100
Nominal Output Torque	[Nm]	*1	3300	3300	3300	3300	2200
Maximum Output Torque	[Nm]	*2	5300	5300	5300	5300	2500
Emergency Stop Torque	[Nm]	*3	12000	12000	12000	12000	10000
Nominal Input Speed	[rpm]	*4	1000				
Maximum Input Speed	[rpm]	*5	2000				
No Load Running Torque	[Nm]	*13	0.6				
Permitted Radial Load	[N]	*6	76000	79000	85000	86000	86000
Permitted Axial Load	[N]	*7	64000	64000	64000	64000	64000
Maximum Radial Load	[N]	*8	86000				
Maximum Axial Load	[N]	*9	64000				
Moment of Inertia (≤ Ø 48)	[kgcm2]	*10	39.0	36.0	35.0	35.0	35.0
Moment of Inertia (≤ Ø 65)	[kgcm2]	--	--	--	--	--	--
Efficiency	[%]	--	90				
Torsional Rigidity	[Nm/arcmin]	*11	850				
Maximum Torsional Backlash	[Arc-min]	*12	≤ 3				
Noise Level	[dB]	--	≤ 63				
Protection Class	--	*14	IP54 (IP65)				
Ambient Temperature	[°C]	--	0 - 40				
Permitted Housing Temperature	[°C]	--	90				
Weight	[kg]	*15	120				

*1) At nominal input speed, service life is 20,000 hours
*2) The maximum torque when starting or stopping operation
*3) The maximum torque allowed under a stress situation (Permitted 1,000 times during service life)
*4) The average input speed
*5) The maximum intermittent input speed
*6) This is the torque at no load applied on the input shaft. The input speed is 1,000 rpm for VRT285
*7) At this load and nominal input speed, service life will be 20,000 hours. (The radial load applied to the output side bearing)
*8) At this load and nominal input speed, service life will be 20,000 hours. (The axial load applied to the output flange center)
*9) The maximum radial load that the reducer can accept
*10) The maximum axial load that the reducer can accept
*11) The efficiency at the nominal torque rating
*12) This does not include the lost motion
*13) Contact NIDEC-SHIMPO for the testing conditions and environment
*14) IP65 (wash-down) is available as an option. Contact NIDEC-SHIMPO for more details and our food grade options
*15) The weight may vary slightly between models

VRT-285 – 1-Stage Dimensions

Input shaft bore ≦ϕ65

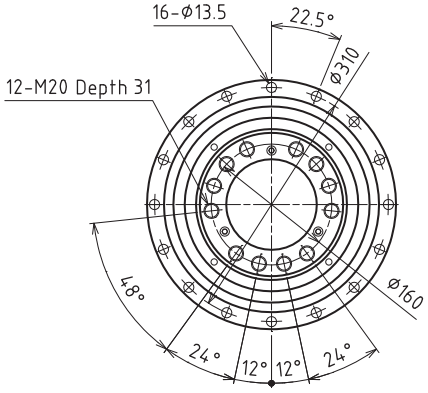

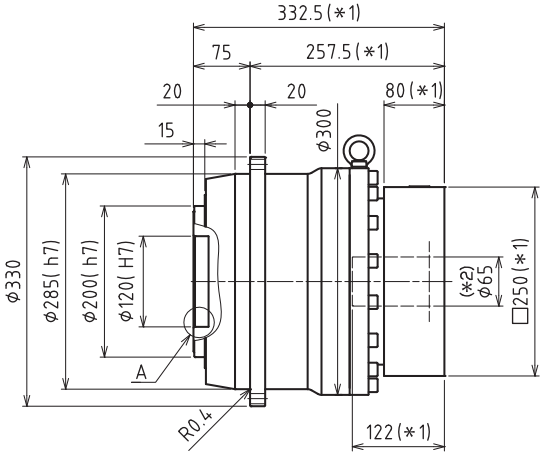

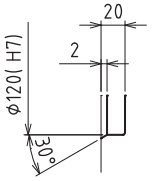

Enlarged detail A

*1) Length will vary depending on motor

*2) Bushing will be inserted to adapt to motor shaft

VRT-285 – 2-Stage Dimensions

Input shaft bore ≦ϕ48

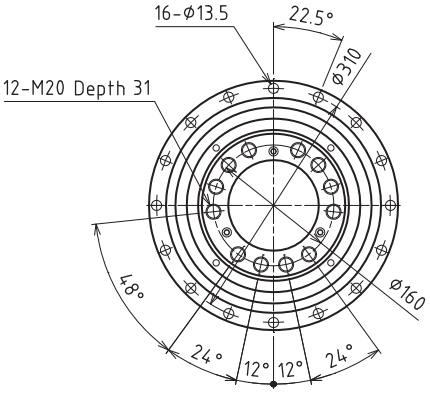

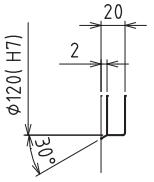

Enlarged detail A

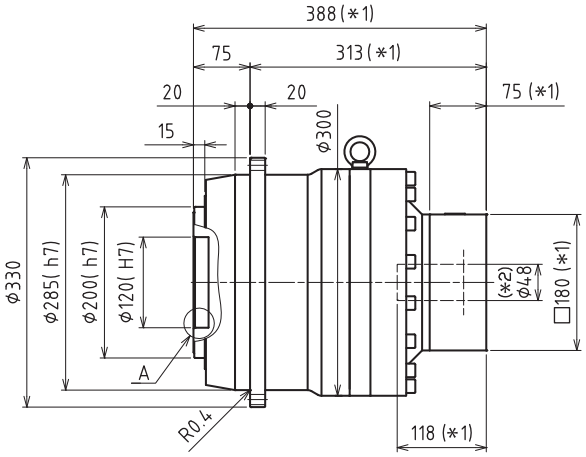

*1) Length will vary depending on motor

*2) Bushing will be inserted to adapt to motor shaft

VRT-285 – 1-Stage Adapter Dimensions

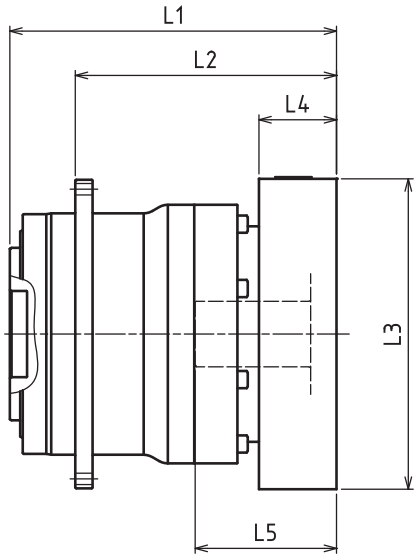

Model Number	**: Adapter Code	1-Stage					
		L1	L*	L2	L3	L4	L5
VRT-285-□-□-48** (Input shaft bore ≦ φ48)	KA	--	--	--	--	--	--
	KB•KC	--	--	--	--	--	--
	LA	--	--	--	--	--	--
	MA	--	--	--	--	--	--
	MB	--	--	--	--	--	--
	NA	--	--	--	--	--	--
	PA	--	--	--	--	--	--
VRT-285-□-□-65** (Input shaft bore ≦ φ65)	MA•MB•MC•MD	283.5	203.5	208.5	□220	80	122
	NA•NC	283.5	203.5	208.5	□250	80	122
	NB•ND	313.5	203.5	238.5	□250	110	152
	PA	303.5	203.5	228.5	□280	100	142
	PB	313.5	203.5	238.5	□280	110	152
	QA•QB	303.5	203.5	228.5	□320	100	142

*1) Single reduction : 1/3~ 1/10

*2) Bushing will be inserted to adapt to motor shaft

For an explanation on the Adapter Flange Code, please turn to page 422.

A more comprehensive adapter flange offering can be found using the NIDEC-SHIMPO Online Selector Tool. The variety is constantly expanding and being updated on the Selector Tool. If you have any questions or need any support, contact NIDEC-SHIMPO.

VRT-285 – 2-Stage Adapter Dimensions

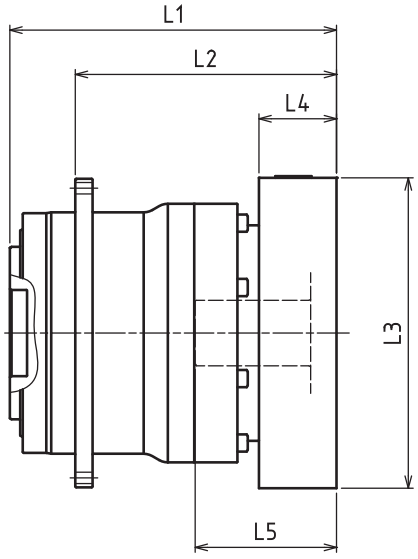

Model Number	**: Adapter Code	2-Stage					
		L1	L*	L2	L3	L4	L5
VRT-285-□-□-48** (Input shaft bore ≦ φ48)	KA	339	264	264	□180	75	118
	KB•KC	319	264	244	□180	55	98
	LA	319	264	244	□200	55	98
	MA	319	264	244	□220	55	98
	MB	339	264	264	□220	75	118
	NA	339	264	264	□250	75	118
	PA	339	264	264	□280	75	118
VRT-285-□-□-65** (Input shaft bore ≦ φ65)	MA•MB•MC•MD	--	--	--	--	--	--
	NA•NC	--	--	--	--	--	--
	NB•ND	--	--	--	--	--	--
	PA	--	--	--	--	--	--
	PB	--	--	--	--	--	--
	QA•QB	--	--	--	--	--	--

*1) Double reduction : 1/15~ 1/100

*2) Bushing will be inserted to adapt to motor shaft

For an explanation on the Adapter Flange Code, please turn to page 422.

A more comprehensive adapter flange offering can be found using the NIDEC-SHIMPO Online Selector Tool. The variety is constantly expanding and being updated on the Selector Tool. If you have any questions or need any support, contact NIDEC-SHIMPO.

NEV-SERIES

The NEV right-angle series is the ideal gearbox for simpler one-directional servo motor applications where space and cost take precedence. The performance and efficiency of the NEV out-performs worm or helical gear options, so many machine builders strongly consider this series, instead of settling for their old default right-angle gearbox. Many times, our OEM customers are upgrading from an induction motor and a helical or worm assembly because their customer is requiring increased throughput and control. In this type of sensitive situation, the NEV is a very price competitive option to help keep the OEMs equipment costs in check and meet the improved functionality required.

The NEV has a lightweight aluminum frame with either a hollow or solid shaft configuration at the output. The series can handle motors ranging between 50w to 3.5 kW, and it achieves nominal output torque ratings ranging between 6 Nm to 90 Nm. The different NEV frame sizes are available in ratios between 5:1 and 105:1, and the gearbox can be provided in special coatings, lubrication, and materials of construction that make it ideal for applications in direct food-grade exposure or heavy washdown intensive environments.

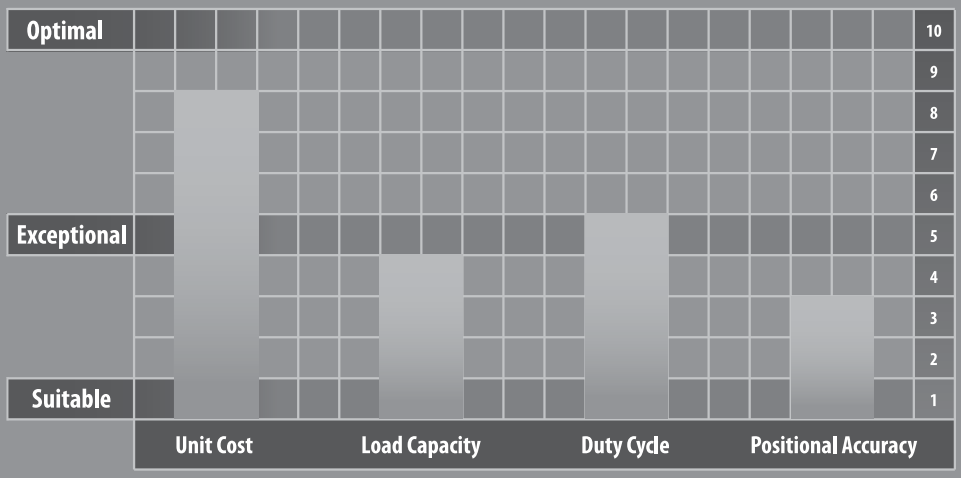

NEV

NEV-SERIES

- Hollow bore output option, provides a very compact footprint and cost-effective right-angle solution
- Quiet operation: Helical cut gears contribute to reduced vibration and noise
- High rigidity & torque: Rigidity and torque capacity are achieved by using uncaged needle roller bearings
- Extremely light weight aluminum body to reduce excess weight from your equipment
- Maintenance-free: No need to replace the grease for the life of the unit. The gearbox can be positioned in any orientation

NEV-Series – Features

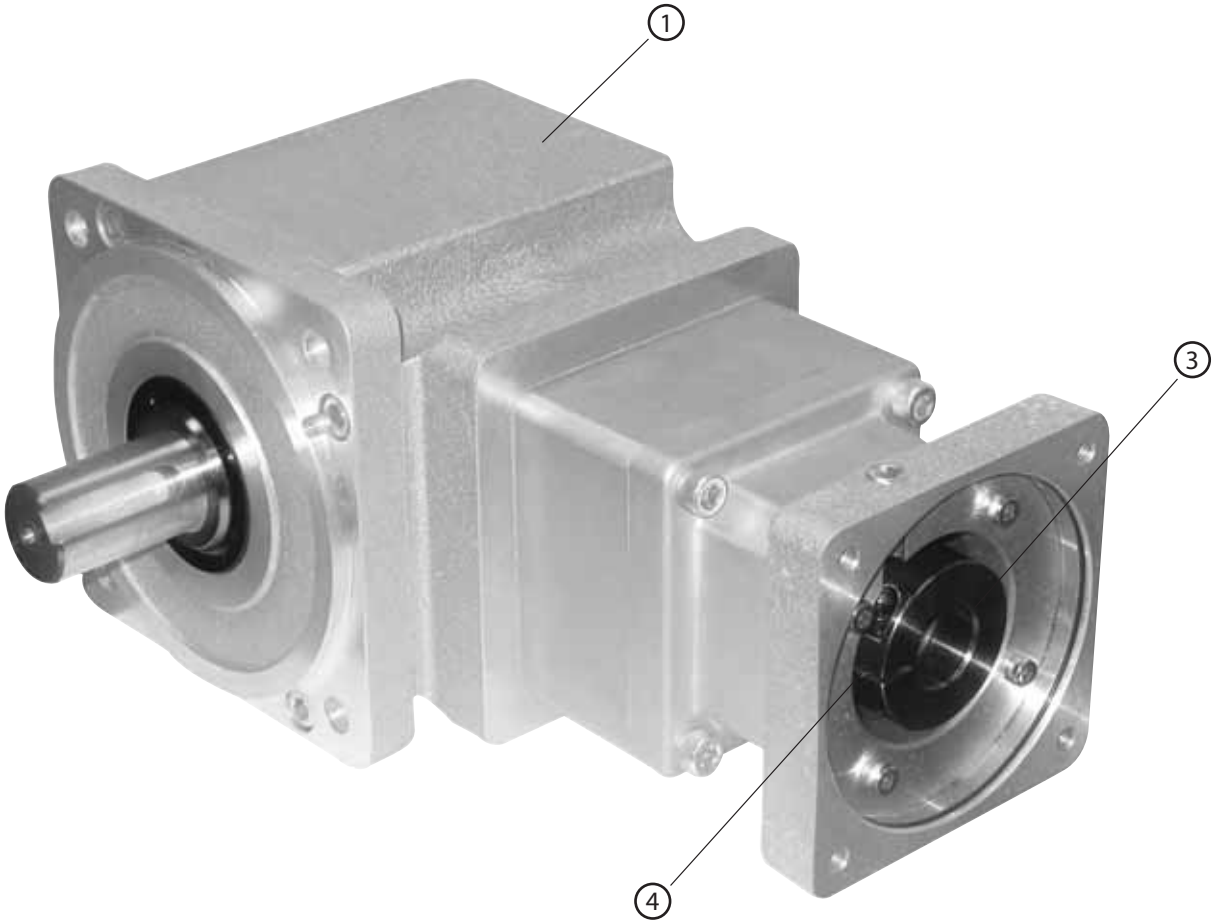

1. This space saving Right-angle gearbox utilizes a spiral bevel gear. Motor can be located at a 90 degree position from the reducer providing a more compact footprint
2. High rigidity and torque capacity are achieved by using uncaged needle roller bearings
3. Adapter-bushing connection enables a simple, effective attachment to most servo motors
4. No leakage through the seal; and the high viscosity, anti-separation grease does not liquefy or migrate away from the gears

NEV-Series – Model Code

NEV		F					
Model	**Input**		**Frame**	**Ratio**	**Motor Attachment**	**Bushings**	**Modifications**
							1 2 3 (See Notes Below)

Model
Ordering Code

NEV	Right Angle

Input
Ordering Code

A	Adaptor Flange
S	Dedicated w/ clamp hub

Frame Size
Ordering Code

B	B Frame
C	C Frame
D	D Frame
E	E Frame

Ordering Code
NEVAF/NEVSF

05	Double Reduction	5:1
09		9:1
15		15:1
27		27:1
45	Triple Reduction	45:1
75		75:1
1H		105:1

Motor Attachment
(Bolt Circle of motor in mm)
Ordering Code

044	43.80 (NEMA 17)
045	45
046	46
060	60
063	63
067	66.68 (NEMA 23)
070	70
075	75
090	90
095	95
098	98.43 (NEMA 34)
100	100
115	115
126	125.73 (NEMA 42)
130	130
145	145
149	149.23 (NEMA 56)
165	165
200	200

Bushing
Ordering Code

0000	No Bushing Required OD (mm) ID (mm)	
00__	Non-catalog dedicated bore in mm- specify	
0801	8	6
0802	8	6.350
0803	8	5
1401	14	6
1402	14	8
1403	14	11
1404	14	6.350
1405	14	9.525
1406	14	12.700
1407	14	12
1408	14	10
1409	14	9
1410	14	5
1901	19	11
1902	19	14
1903	19	16
1904	19	9.525
1905	19	12.700
1906	19	15.875
1907	19	12
1908	19	10
1909	19	9
1910	19	8
2401	24	14
2402	24	16
2403	24	19
2404	24	12.700
2405	24	15.875
2406	24	22
2407	24	19.050
2408	24	11

Modifications/Motor Attachment Threaded Hole
Ordering Code

000	Standard
5	Keyless output shaft
6	NEVAF - solid output shaft
7	NEVAF - hollow output shaft
I	IP65 - no paint - standard grease
F	Food grade grease - no paint - IP65
G	Food grade grease - Steel-It paint - IP65
S	Steel-It paint - standard grease - IP65
W	White epoxy paint - standard grease - IP65
X	Food grade grease - white epoxy paint - IP65
T	Re-tap motor attachment flange one size larger
H	Through hole on motor attachment flange
L	Larger through hole on motor attachment flange
B	Pilot diameter reduced
R	Deeper motor attachment flange/add spacer plate
A_	Specify

Adaptor Flange Re-Threaded Hole
(with T Code)

Standard	T
M3	M4
M4	M5
M5	M6
M6	M8
M8	M10
M10	M12

Options & Modifications Available

- Custom motor attachment dimensions
- Food grade grease (needed when unit is placed above a food line)
- Stainless steel output shaft
- Custom ratios
- Custom outputs
- Output shaft drilled and tapped

Notes on "Modifications" Section of Code:

1) Feature 5, 6, or 7 would be entered in Box1 of the section of code.
2) Feature B or R would be entered in Box3 of the code.
3) Enter additional features in Box1, 2, 3 if available, organize in either numeric or alphabetical order.
4) If Box that is not utilized, enter a 0 fill the Boxes within the Modifications section.

NEV B-Frame – 2-Stage Specifications

Frame Size	**B (78mm)**					
Stage	**2-Stage**					
Ratio	Units	Note	5	9	15	27
Nominal Output Torque	[Nm]	--	6	6	10	10
Maximum Acceleration Torque	[Nm]	--	20	20	30	30
Emergency Stop Torque	[Nm]	--	35	40	50	50
Nominal Input Speed	[rpm]	--	3000			
Maximum Input Speed	[rpm]	--	6000			
No Load Running Torque	[Nm]	--	0.18			
Permitted Radial Load	[N]	--	1000	1200	1500	1800
Permitted Axial Load	[N]	--	500	600	750	900
Moment of Inertia (≤Ø 8)	[kgcm2]	--	--	--	--	--
Moment of Inertia (≤ Ø14)	[kgcm2]	--	0.275	0.110	0.059	0.146
Efficiency	[%]	--	85			
Torsional Rigidity	[Nm/arcmin]	--	0.4			
Maximum Torsional Backlash	[Arc-min]	--	≤ 30			
Noise Level	[dB]	--	≤ 73			
Protection Class	--	--	IP65			
Ambient Temperature	[°C]	--	0-40			
Permitted Housing Temperature	[°C]	--	90			
Weight (Solid Output Shaft)	[kg]	--	3.8			
Weight (Hollow Output Shaft)	[kg]	--	3.6			

NEV B-Frame, 2-Stage Dimensions, Solid / Hollow Output Shaft Type – Ratios: 5:1, 9:1, 15:1, 27:1

Adapter	**Unit**	**Bolt Circle LC**	**Pilot LH**	**Square LD**	**Tapping Bolt LJ**	**Depth Y**	**Length**		**Plug LK**	**Flange Depth**		
							L	**CL**		**LF**	**LG**	**ML**
B1	mm	45	30	42	M3x0.5	8	168.5	129.5	10	6	5	32
	in	1.772	1.181	1.65	--	0.31	6.634	5.098	0.39	0.24	0.20	1.26
B2	mm	46	30	42	M4X0.7	10	168.5	129.5	10	6	5	32
	in	1.811	1.181	1.65	--	0.39	6.634	5.098	0.39	0.24	0.20	1.26
B8	mm	46	30	42	M4X0.7	10	171.5	132.5	13	6	8	35
	in	1.811	1.181	1.65	--	0.39	6.752	5.217	0.51	0.24	0.31	1.38
B4	mm	60	50	60	M4X0.7	10	168.5	129.5	10	4	5	32
	in	2.362	1.969	2.36	--	0.39	6.634	5.098	0.39	0.16	0.20	1.26
B4	mm	70	50	60	M4X0.7	10	168.5	129.5	10	4	5	32
	in	2.756	1.969	2.36	--	0.39	6.634	5.098	0.39	0.16	0.20	1.26
B9	mm	70	50	60	M5X0.8	20	173.5	134.5	15	9	10	37
	in	2.756	1.969	2.36	--	0.79	6.831	5.295	0.59	0.35	0.39	1.46
B5	mm	66.68	38.100	58	M4X0.7	10	168.5	129.5	10	4	5	32
(NEMA23)	in	2.625	1.500	2.28	--	0.39	6.634	5.098	0.39	0.16	0.20	1.26
B5+Spacer	mm	66.68	38.100	60	M5X0.8	--	176.5	137.5	18	3	13	40
(NEMA23)	in	2.625	1.500	2.36	--	--	6.949	5.413	0.71	0.12	0.51	1.57
B6	mm	90	70	80	M5X0.8	12	168.5	129.5	10	4	5	32
	in	3.543	2.756	3.15	--	0.47	6.634	5.098	0.39	0.16	0.20	1.26
B7	mm	43.80	22	42	2-3.3 dia.	--	170.5	131.5	12	4	7	34
(NEMA17)	in	1.724	0.866	1.65	2-0.13 dia.	--	6.713	5.177	0.47	0.16	0.28	1.34
B10	mm	63	40	58	M4X0.7	10	168.5	129.5	10	4	5	32
	in	2.480	1.575	2.28	--	0.39	6.634	5.098	0.39	0.16	0.20	1.26

NEV B-Frame (78mm) 2-Stage Dimensions – Ratios: 5:1, 9:1, 15:1, 27:1

Solid Output Shaft Type

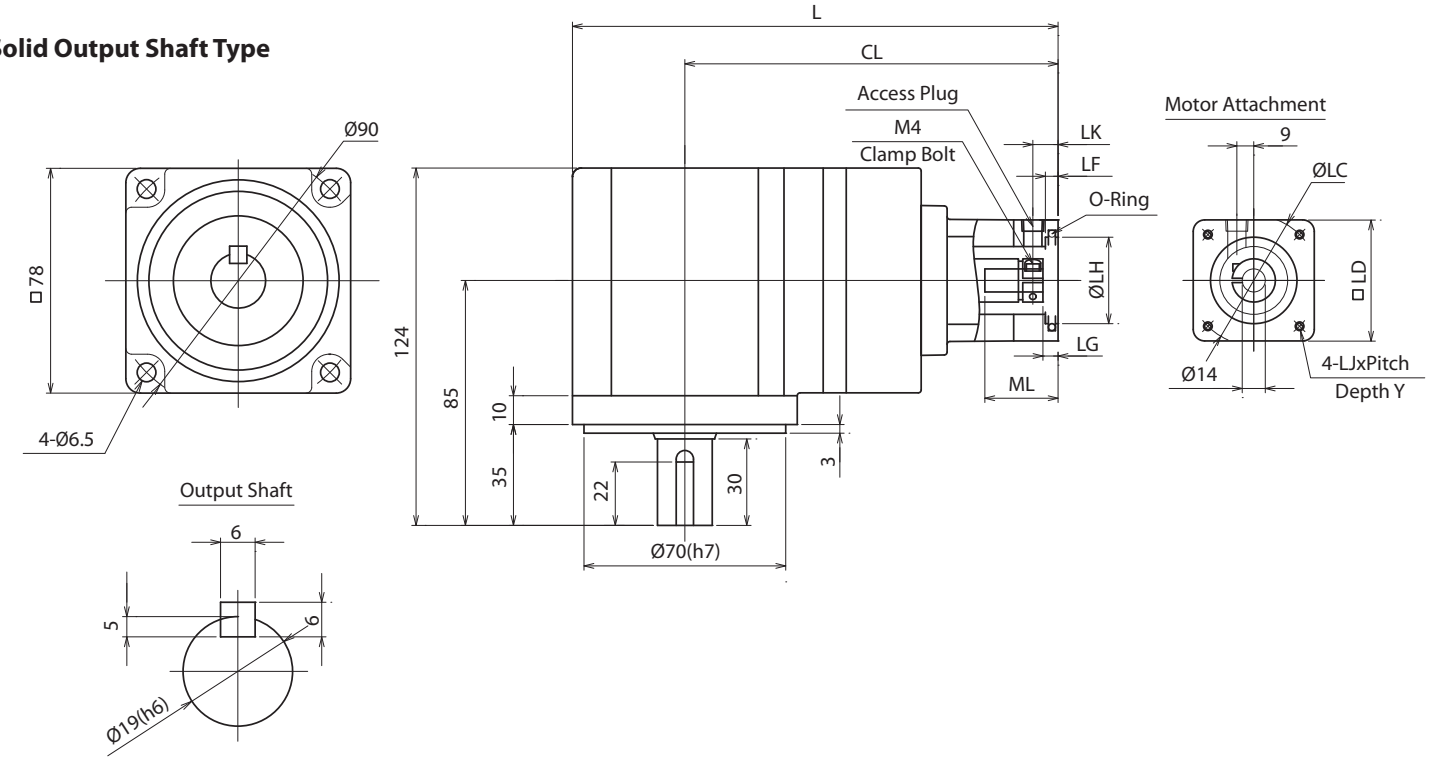

Hollow Output Shaft Type

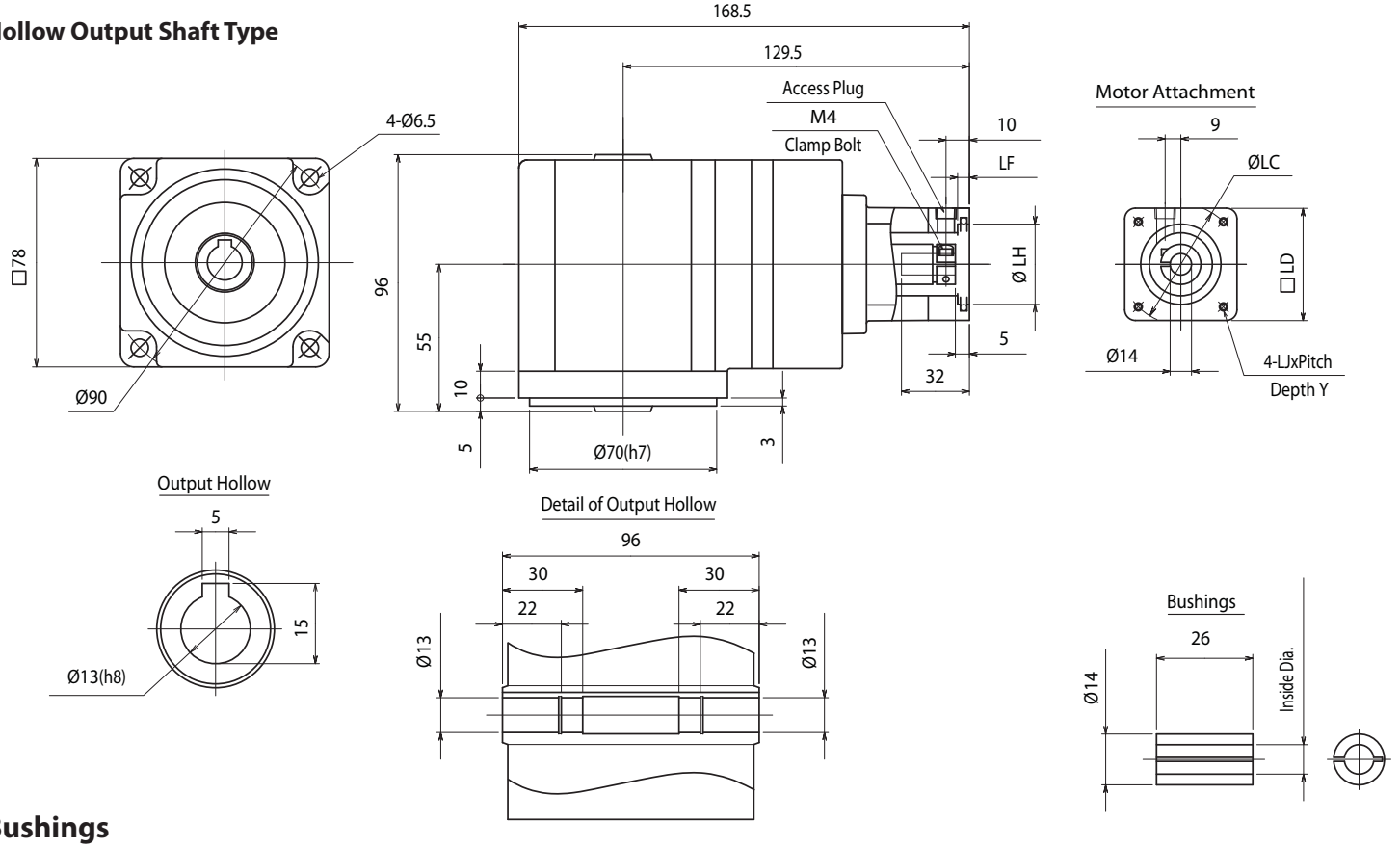

Bushings

Bushing	1401	1402	1403	1404	1405	1406	1407	1408	1409	1410
Inside	6	8	11	6.350	9.525	12.700	12	10	9	5
Diameter	0.236	0.315	0.433	0.250	0.375	0.500	0.472	0.394	0.354	0.197

NEV B-Frame – 3-Stage Specifications

Frame Size	**B (78mm)**				
Stage	**3-Stage**				
Ratio	Units	Note	45	75	105
Nominal Output Torque	[Nm]	--	10	15	15
Maximum Acceleration Torque	[Nm]	--	30	30	30
Emergency Stop Torque	[Nm]	--	50	50	50
Nominal Input Speed	[rpm]	--	3000		
Maximum Input Speed	[rpm]	--	6000		
No Load Running Torque	[Nm]	--	0.109		
Permitted Radial Load	[N]	--	1800	1800	1800
Permitted Axial Load	[N]	--	900	900	900
Moment of Inertia (≤Ø 8)	[kgcm2]	--	0.091	0.083	0.078
Moment of Inertia (≤ Ø14)	[kgcm2]	--	--	--	--
Efficiency	[%]	--	80		
Torsional Rigidity	[Nm/arcmin]	--	0.4		
Maximum Torsional Backlash	[Arc-min]	--	≤ 30		
Noise Level	[dB]	--	≤ 63		
Protection Class	--	--	IP65		
Ambient Temperature	[°C]	--	0-40		
Permitted Housing Temperature	[°C]	--	90		
Weight (Solid Output Shaft)	[kg]	--	3.9		
Weight (Hollow Output Shaft)	[kg]	--	3.7		

NEV B-Frame, 3-Stage Dimensions, Solid / Hollow Output Shaft Type – Ratios: 45:1, 75:1, 105:1

Adapter	**Unit**	**Bolt Circle LC**	**Pilot LH**	**Square LD**	**Tapping Bolt LJ**	**Depth Y**	**Length**		**Plug LK**	**Flange Depth**		
							L	**CL**		**LF**	**LG**	**ML**
B1	mm	45	30	42	M3x0.5	8	174	135	10	6	5	32
	in	1.772	1.181	1.65	--	0.31	6.850	5.315	0.39	0.24	0.20	1.26
B2	mm	46	30	42	M4X0.7	10	174	135	10	6	5	32
	in	1.811	1.181	1.65	--	0.39	6.850	5.315	0.39	0.24	0.20	1.26
B8	mm	46	30	42	M4X0.7	10	177	138	13	6	8	35
	in	1.811	1.181	1.65	--	0.39	6.969	5.433	0.51	0.24	0.31	1.38
B4	mm	60	50	60	M4X0.7	10	174	135	10	4	5	32
	in	2.362	1.969	2.36	--	0.39	6.850	5.315	0.39	0.16	0.20	1.26
B4	mm	70	50	60	M4X0.7	10	174	135	10	4	5	32
	in	2.756	1.969	2.36	--	0.39	6.850	5.315	0.39	0.16	0.20	1.26
B9	mm	70	50	60	M5X0.8	20	179	140	15	9	10	37
	in	2.756	1.969	2.36	--	0.79	7.047	5.512	0.59	0.35	0.39	1.46
B5	mm	66.68	38.100	58	M4X0.7	10	174	135	10	4	5	32
(NEMA23)	in	2.625	1.500	2.28	--	0.39	6.850	5.315	0.39	0.16	0.20	1.26
B5+Spacer	mm	66.68	38.100	60	M5X0.8	12	182	143	18	3	13	40
(NEMA23)	in	2.625	1.500	2.36	--	0.47	7.165	5.630	0.71	0.12	0.51	1.57
B6	mm	90	70	80	M5X0.8	12	174	135	10	4	5	32
	in	3.543	2.756	3.15	--	0.47	6.850	5.315	0.39	0.16	0.20	1.26
B7	mm	43.80	22	42	2-3.3 dia.	--	176	137	12	4	7	34
(NEMA17)	in	1.724	0.866	1.65	2-0.13 dia.	--	6.929	5.394	0.47	0.16	0.28	1.34
B10	mm	63	40	58	M4X0.7	10	174	135	10	4	5	32
	in	2.480	1.575	2.28	--	0.39	6.850	5.315	0.39	0.16	0.20	1.26

NEV B-Frame (78mm) 3-Stage Dimensions – Ratios: 45:1, 75:1, 105:1

Solid Output Shaft Type

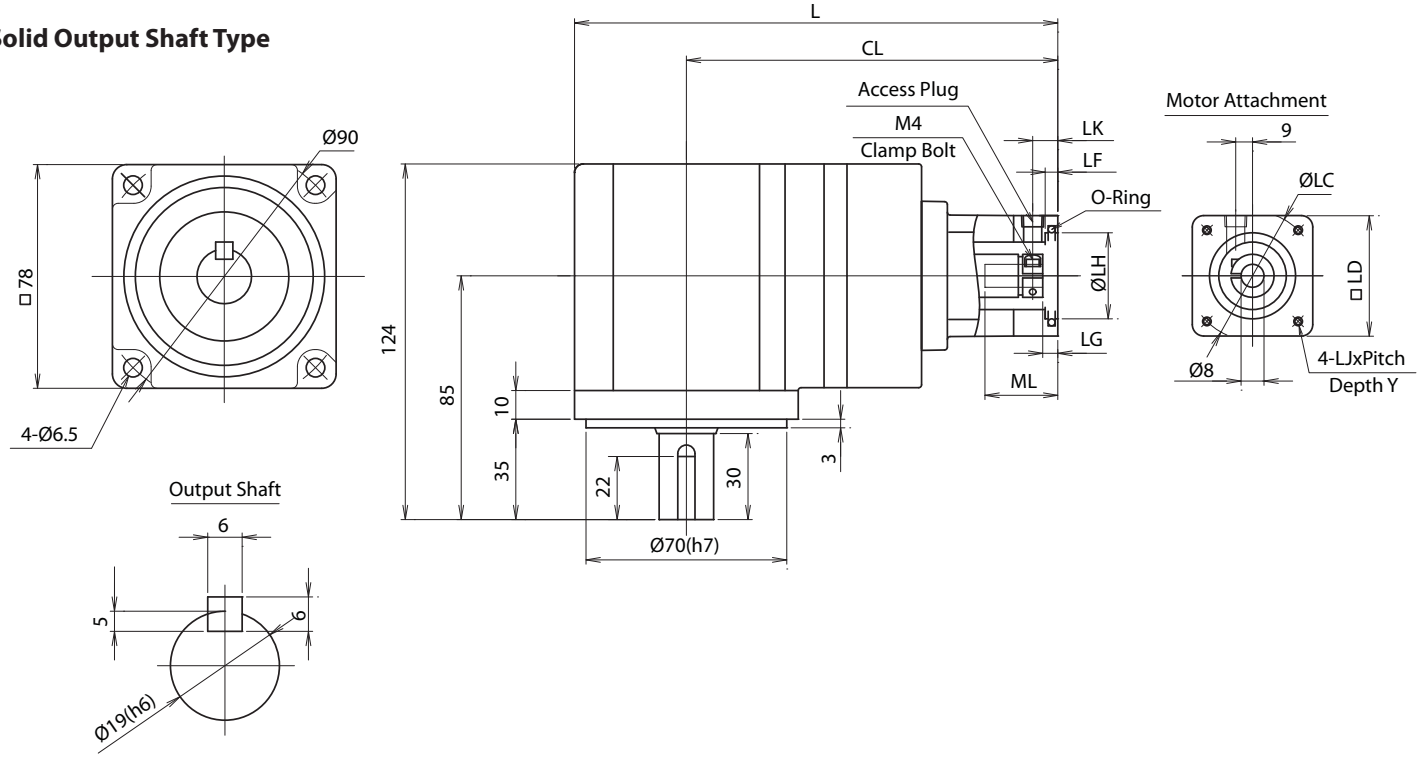

Hollow Output Shaft Type

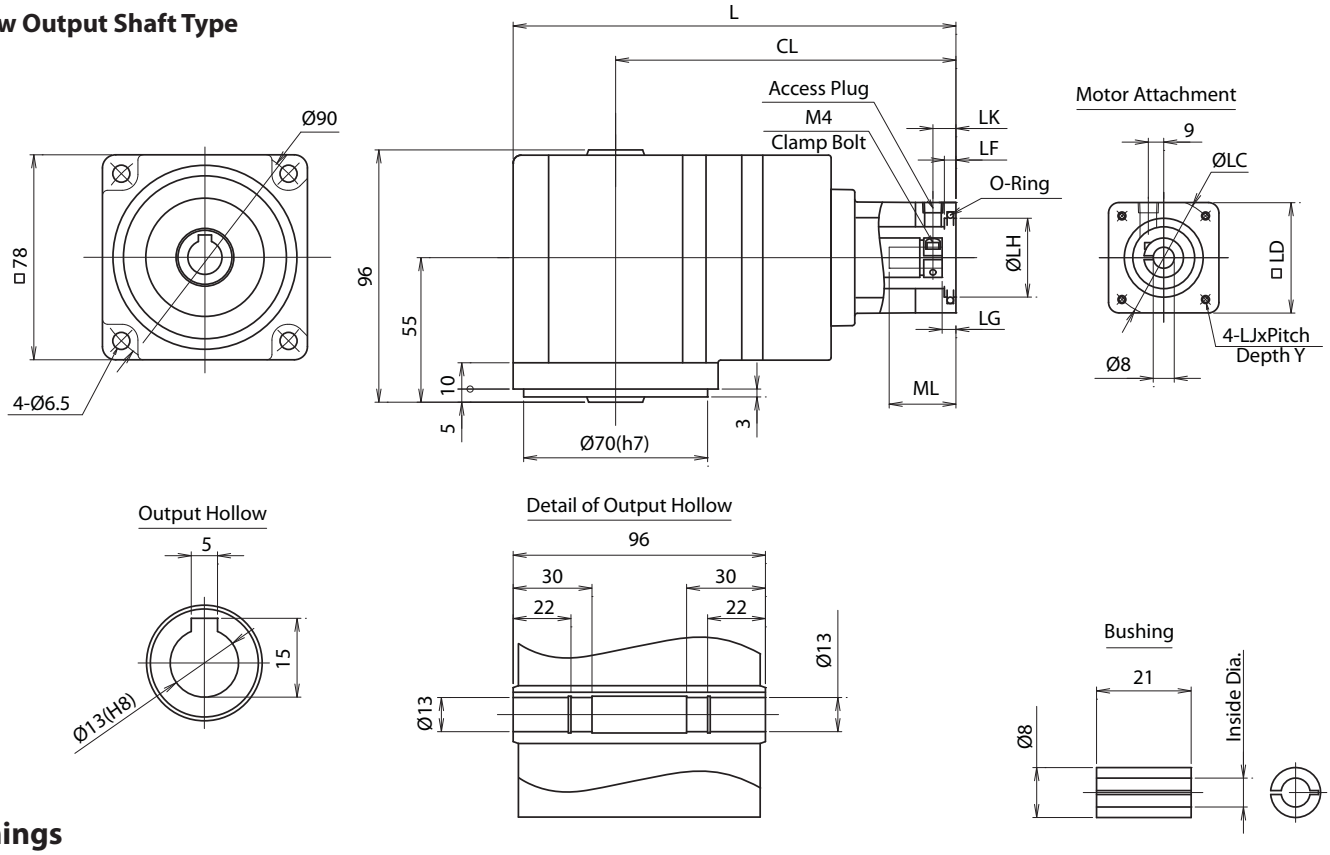

Bushings

Bushing	0801	0802	0803
Inside	6	6.350	5
Diameter	0.236	0.250	0.197

NEV C-Frame – 2-Stage Specifications

Frame Size	**C (90mm)**					
Stage	**2-Stage**					
Ratio	Units	Note	5	9	15	27
Nominal Output Torque	[Nm]	--	15	20	20	30
Maximum Acceleration Torque	[Nm]	--	30	35	40	40
Emergency Stop Torque	[Nm]	--	50	50	60	75
Nominal Input Speed	[rpm]	--	3000			
Maximum Input Speed	[rpm]	--	6000			
No Load Running Torque	[Nm]	--	0.3			
Permitted Radial Load	[N]	--	1000	1500	1800	1800
Permitted Axial Load	[N]	--	500	750	900	900
Moment of Inertia (≤Ø14)	[kgcm2]	--	--	--	--	--
Moment of Inertia (≤ Ø19)	[kgcm2]	--	0.806	0.744	0.415	0.585
Efficiency	[%]	--	85			
Torsional Rigidity	[Nm/arcmin]	--	1.0			
Maximum Torsional Backlash	[Arc-min]	--	≤ 30			
Noise Level	[dB]	--	≤ 73			
Protection Class	--	--	IP65			
Ambient Temperature	[°C]	--	0-40			
Permitted Housing Temperature	[°C]	--	90			
Weight (Solid Output Shaft)	[kg]	--	4.1			
Weight (Hollow Output Shaft)	[kg]	--	4.0			

NEV C-Frame, 2-Stage Dimensions, Solid / Hollow Output Shaft Type – Ratios: 5:1, 9:1, 15:1, 27:1

Adapter	**Unit**	**Bolt Circle LC**	**Pilot LH**	**Square LD**	**Tapping Bolt LJ**	**Depth Y**	**Length**		**Plug LK**	**Flange Depth**		
							L	**CL**		**LF**	**LG**	**ML**
C1	mm	60	50	60	M4x0.7	10	206.5	161.5	11	4	5	42
	in	2.362	1.969	2.36	--	0.39	8.130	6.358	0.43	0.16	0.20	1.65
C1	mm	70	50	60	M4x0.7	10	206.5	161.5	11	4	5	42
	in	2.756	1.969	2.36	--	0.39	8.130	6.358	0.43	0.16	0.20	1.65
C7	mm	70	50	60	M5x0.8	12	210.5	165.5	15	6	9	46
	in	2.756	1.969	2.36	--	0.47	8.287	6.516	0.59	0.24	0.35	1.81
C2	mm	90	70	80	M5X0.8	12	206.5	161.5	11	4	5	42
	in	3.543	2.756	3.15	--	0.47	8.130	6.358	0.43	0.16	0.20	1.65
C8	mm	90	70	80	M6X1.0	21	211.5	166.5	16	9	10	47
	in	3.543	2.756	3.15	--	0.83	8.327	6.555	0.63	0.35	0.39	1.85
C3	mm	100	80	86	M6X1.0	16	206.5	161.5	11	4	5	42
	in	3.937	3.150	3.39	--	0.63	8.130	6.358	0.43	0.16	0.20	1.65
C4	mm	98.43	73.025	83	M5X0.8	12	206.5	161.5	11	4	5	42
(NEMA34)	in	3.875	2.875	3.27	--	0.47	8.130	6.358	0.43	0.16	0.20	1.65
C4+Spacer	mm	98.43	73.025	83	M5X0.8	12	214.5	169.5	19	3	13	50
(NEMA34)	in	3.875	2.875	3.27	--	0.47	8.445	6.673	0.75	0.12	0.51	1.97
C5	mm	75	60	67	M5X0.8	12	206.5	161.5	11	4	5	42
	in	2.953	2.362	2.64	--	0.47	8.130	6.358	0.43	0.16	0.20	1.65
C6	mm	115	95	100	M6X1.0	16	206.5	161.5	11	4	5	42
	in	4.528	3.740	3.94	--	0.63	8.130	6.358	0.43	0.16	0.20	1.65
C9	mm	66.68	38.100	60	M4x0.7	10	206.5	161.5	11	4	5	42
(NEMA23)	in	2.625	1.500	2.36	--	0.39	8.130	6.358	0.43	0.16	0.20	1.65
C14	mm	66.68	38.100	60	M5x0.8	--	214.5	169.5	18	11	13	50
	in	2.625	1.500	2.36	--	--	8.445	6.673	0.71	0.43	0.51	1.97

NEV C-Frame, 2-Stage Dimensions, Solid / Hollow Output Shaft Type – Ratios: 5:1, 9:1, 15:1, 27:1

Adapter	Unit	Bolt Circle LC	Pilot LH	Square LD	Tapping Bolt LJ	Depth Y	Length		Plug LK	Flange Depth		
							L	CL		LF	LG	ML
C10	mm	63	40	60	M4x0.7	10	206.5	161.5	11	4	5	42
	in	2.480	1.575	2.36	--	0.39	8.130	6.358	0.43	0.16	0.20	1.65
C11	mm	95	80	86	M6x1.0	--	206.5	161.5	11	4	5	42
	in	3.740	3.150	3.39	--	--	8.130	6.358	0.43	0.16	0.20	1.65

NEV C-Frame (90mm) 2-Stage Dimensions – Ratios: 5:1, 9:1, 15:1, 27:1

Solid Output Shaft Type

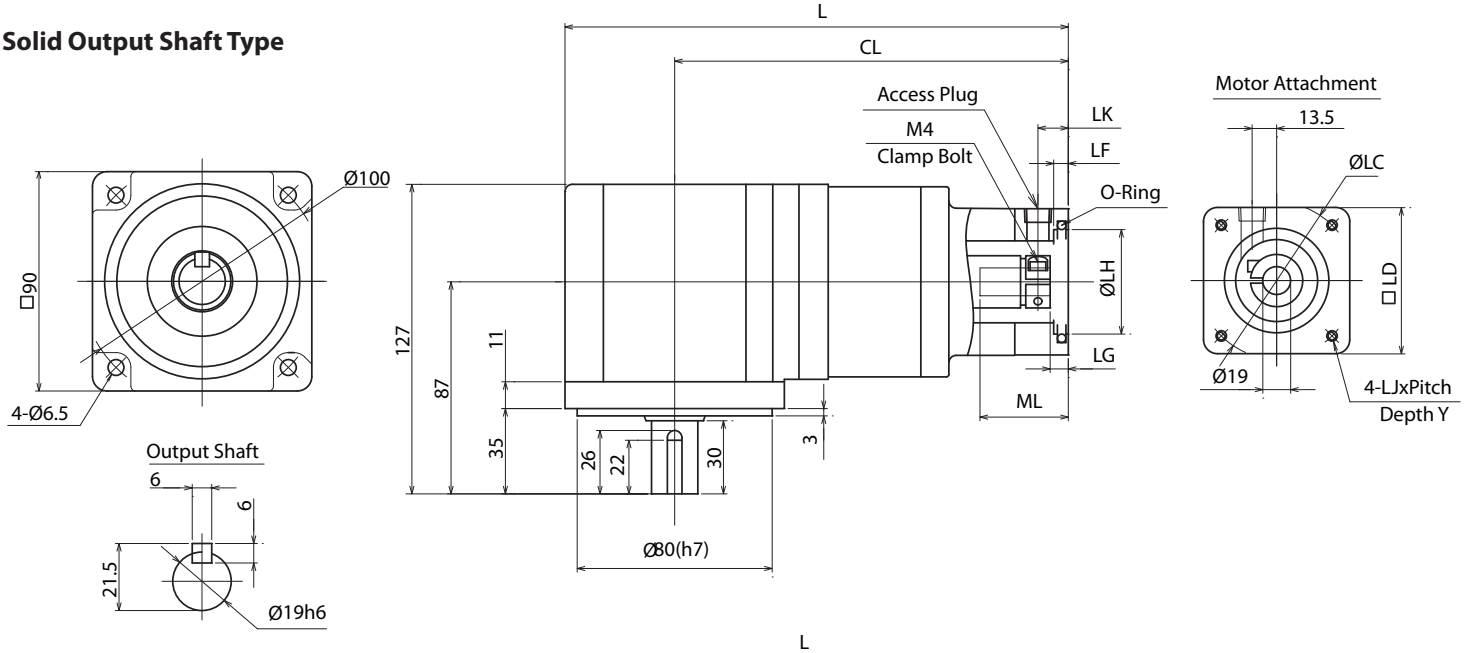

Hollow Output Shaft Type

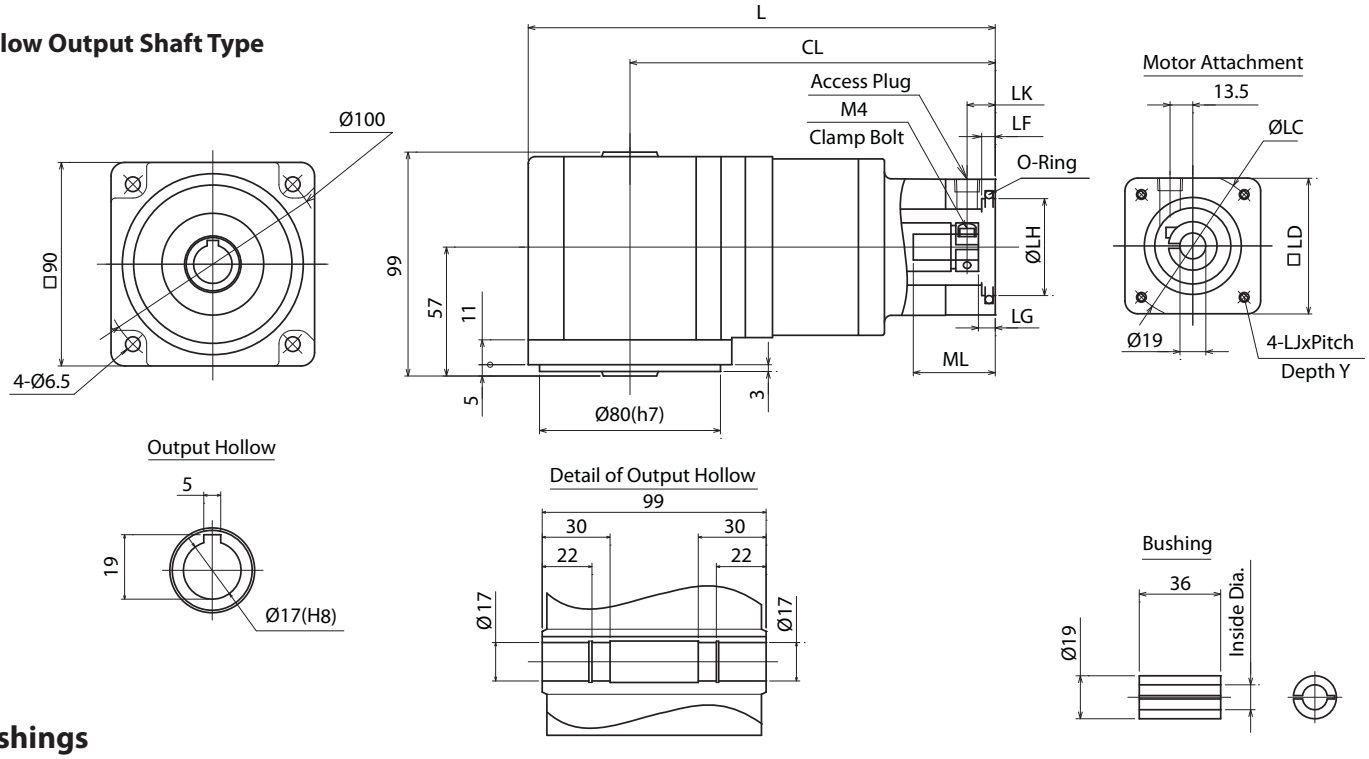

Bushings

Bushing	1901	1902	1903	1904	1905	1906	1907	1908	1909	1910	1911
Inside	11	14	16	9.525	12.700	15.875	12	10	9	8	6.350
Diameter	0.433	0.551	0.630	0.375	0.500	0.625	0.472	0.394	0.354	0.315	0.250

NEV C-Frame – 3-Stage Specifications

Frame Size	**C (90mm)**				
Stage	**3-Stage**				
Ratio	Units	Note	45	75	105
Nominal Output Torque	[Nm]	--	30	30	30
Maximum Acceleration Torque	[Nm]	--	40	40	40
Emergency Stop Torque	[Nm]	--	75	75	75
Nominal Input Speed	[rpm]	--	3000		
Maximum Input Speed	[rpm]	--	6000		
No Load Running Torque	[Nm]	--	0.205		
Permitted Radial Load	[N]	--	1800	1800	1800
Permitted Axial Load	[N]	--	900	900	900
Moment of Inertia (≤Ø14)	[kgcm2]	--	0.794	0.690	0.590
Moment of Inertia (≤ Ø19)	[kgcm2]	--	--	--	--
Efficiency	[%]	--	80		
Torsional Rigidity	[Nm/arcmin]	--	1.0		
Maximum Torsional Backlash	[Arc-min]	--	≤ 30		
Noise Level	[dB]	--	≤ 63		
Protection Class	--	--	IP65		
Ambient Temperature	[°C]	--	0-40		
Permitted Housing Temperature	[°C]	--	90		
Weight (Solid Output Shaft)	[kg]	--	4.3		
Weight (Hollow Output Shaft)	[kg]	--	4.2		

NEV C-Frame, 3-Stage Dimensions, Solid / Hollow Output Shaft Type – Ratios: 45:1, 75:1, 105:1

Adapter	**Unit**	**Bolt Circle LC**	**Pilot LH**	**Square LD**	**Tapping Bolt LJ**	**Depth Y**	**Length**		**Plug LK**	**Flange Depth**		
							L	**CL**		**LF**	**LG**	**ML**
C1	mm	60	50	60	M4x0.7	10	209	164	11	4	5	42
	in	2.362	1.969	2.36	--	0.39	8.228	6.457	0.43	0.16	0.20	1.65
C1	mm	70	50	60	M4x0.7	10	209	164	11	4	5	42
	in	2.756	1.969	2.36	--	0.39	8.228	6.457	0.43	0.16	0.20	1.65
C7	mm	70	50	60	M5x0.8	12	213	168	15	6	9	46
	in	2.756	1.969	2.36	--	0.47	8.386	6.614	0.59	0.24	0.35	1.81
C2	mm	90	70	80	M5X0.8	12	209	164	11	4	5	42
	in	3.543	2.756	3.15	--	0.47	8.228	6.457	0.43	0.16	0.20	1.65
C8	mm	90	70	80	M6X1.0	21	214	169	16	9	10	47
	in	3.543	2.756	3.15	--	0.83	8.425	6.654	0.63	0.35	0.39	1.85
C3	mm	100	80	86	M6X1.0	16	209	164	11	4	5	42
	in	3.937	3.150	3.39	--	0.63	8.228	6.457	0.43	0.16	0.20	1.65
C4	mm	98.43	73.025	83	M5X0.8	12	209	164	11	4	5	42
(NEMA34)	in	3.875	2.875	3.27	--	0.47	8.228	6.457	0.43	0.16	0.20	1.65
C4+Spacer	mm	98.43	73.025	83	M5X0.8	12	217	172	19	3	13	50
(NEMA34)	in	3.875	2.875	3.27	--	0.47	8.543	6.772	0.75	0.12	0.51	1.97
C5	mm	75	60	67	M5X0.8	12	209	164	11	4	5	42
	in	2.953	2.362	2.64	--	0.47	8.228	6.457	0.43	0.16	0.20	1.65
C6	mm	115	95	100	M6X1.0	16	209	164	11	4	5	42
	in	4.528	3.740	3.94	--	0.63	8.228	6.457	0.43	0.16	0.20	1.65
C9	mm	66.68	38.100	60	M4x0.7	10	209	164	11	4	5	42
(NEMA23)	in	2.625	1.500	2.36	--	0.39	8.228	6.457	0.43	0.16	0.20	1.65
C14	mm	66.68	38.100	60	M5x0.8	12	217	172	18	11	13	50
	in	2.625	1.500	2.36	--	0.47	8.543	6.772	0.71	0.43	0.51	1.97

NEV C-Frame, 3-Stage Dimensions, Solid / Hollow Output Shaft Type – Ratios: 45:1, 75:1, 105:1

Adapter	Unit	Bolt Circle LC	Pilot LH	Square LD	Tapping Bolt LJ	Depth Y	Length		Plug LK	Flange Depth		
							L	CL		LF	LG	ML
C10	mm	63	40	60	M4x0.7	10	209	164	11	4	5	42
	in	2.480	1.575	2.36	--	0.39	8.228	6.457	0.43	0.16	0.20	1.65
C11	mm	95	80	86	M6x1.0	-	209	164	11	4	5	42
	in	3.740	3.150	3.39	--	-	8.228	6.457	0.43	0.16	0.20	1.65

NEV C-Frame (90mm) 3-Stage Dimensions – Ratios: 45:1, 75:1, 105:1

Solid Output Shaft Type

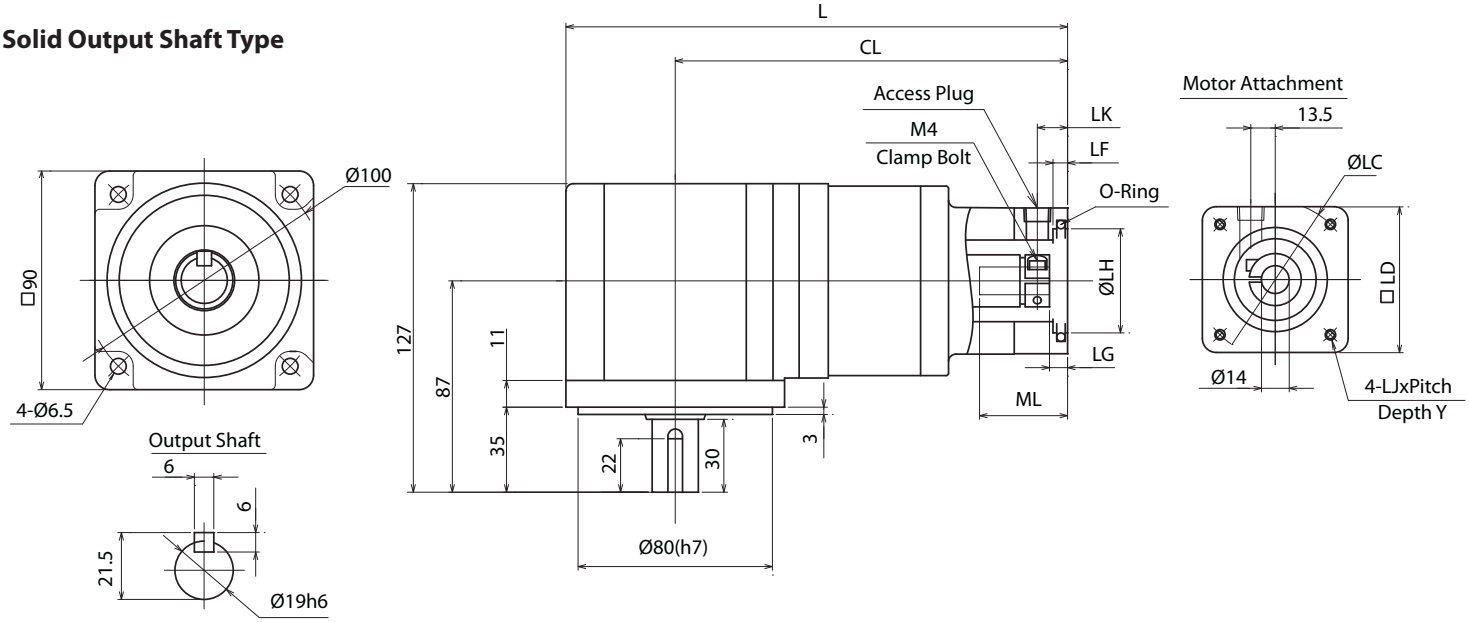

Hollow Output Shaft Type

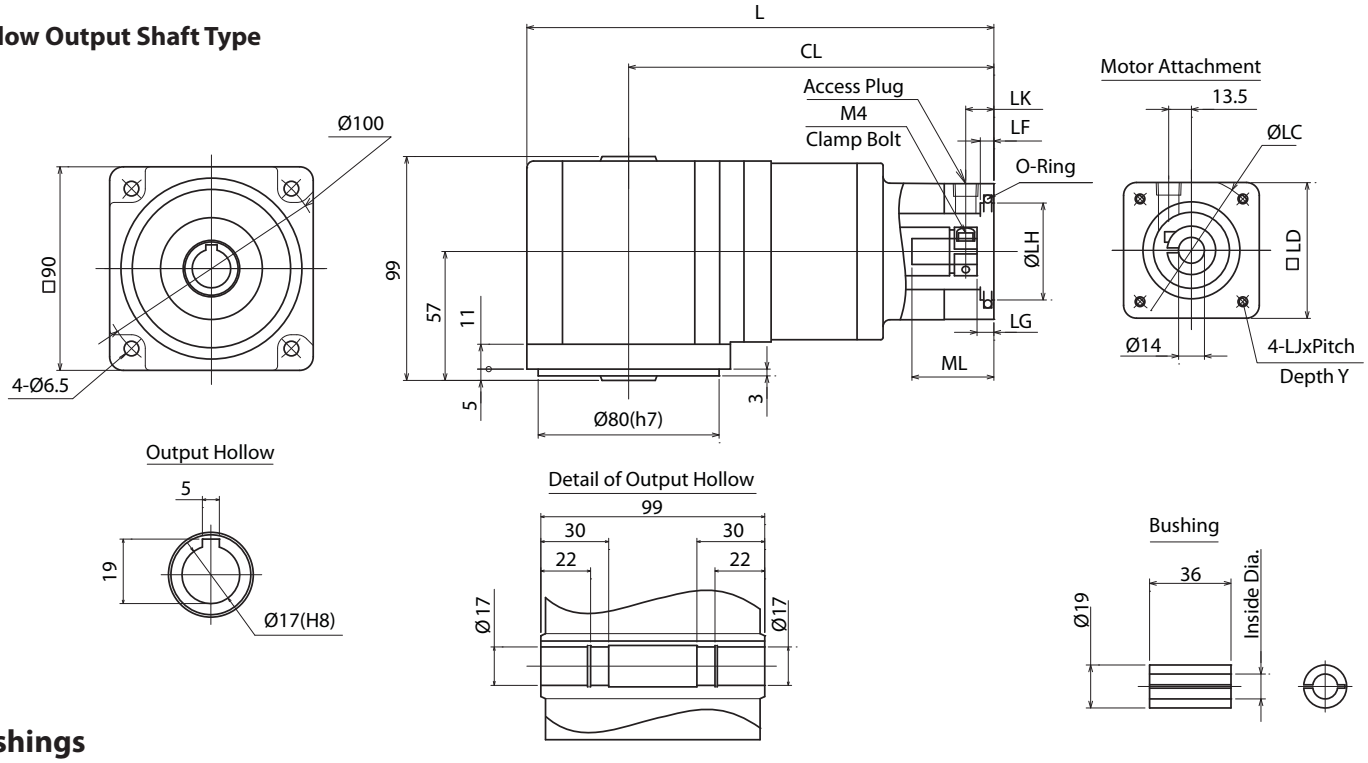

Bushings

Bushing	1401	1402	1403	1404	1405	1406	1407	1408	1409	1410
Inside	6	8	11	6.350	9.525	12.700	12	10	9	5
Diameter	0.236	0.315	0.433	0.250	0.375	0.500	0.472	0.394	0.354	0.197

NEV D-Frame – 2-Stage Specifications

Frame Size	**D (115mm)**					
Stage	**2-Stage**					
Ratio	Units	Note	5	9	15	27
Nominal Output Torque	[Nm]	--	25	25	25	40
Maximum Acceleration Torque	[Nm]	--	55	75	75	80
Emergency Stop Torque	[Nm]	--	100	140	140	180
Nominal Input Speed	[rpm]	--	3000			
Maximum Input Speed	[rpm]	--	6000			
No Load Running Torque	[Nm]	--	0.45			
Permitted Radial Load	[N]	--	2200	2200	2600	2600
Permitted Axial Load	[N]	--	1100	1100	1300	1300
Moment of Inertia (≤Ø14)	[kgcm2]	--	--	--	--	--
Moment of Inertia (≤ Ø19)	[kgcm2]	--	1.502	1.254	0.464	0.720
Efficiency	[%]	--	85			
Torsional Rigidity	[Nm/arcmin]	--	1.2	1.5	1.5	1.5
Maximum Torsional Backlash	[Arc-min]	--	≤ 30			
Noise Level	[dB]	--	≤ 73			
Protection Class	--	--	IP65			
Ambient Temperature	[°C]	--	0-40			
Permitted Housing Temperature	[°C]	--	90			
Weight (Solid Output Shaft)	[kg]	--	7.1			
Weight (Hollow Output Shaft)	[kg]	--	6.7			

NEV D-Frame, 2-Stage Dimensions, Solid / Hollow Output Shaft Type – Ratios: 5:1, 9:1, 15:1, 27:1

Adapter	**Unit**	**Bolt Circle LC**	**Pilot LH**	**Square LD**	**Tapping Bolt LJ**	**Depth Y**	**Length**		**Plug LK**	**Flange Depth**		
							L	**CL**		**LF**	**LG**	**ML**
D1	mm	60	50	60	M4x0.7	10	234	176.5	11	4	5	42
	in	2.362	1.969	2.36	--	0.39	9.213	6.949	0.43	0.16	0.20	1.65
D1	mm	70	50	60	M4x0.7	10	234	176.5	11	4	5	42
	in	2.756	1.969	2.36	--	0.39	9.213	6.949	0.43	0.16	0.20	1.65
D7	mm	70	50	60	M5x0.8	12	238	180.5	15	6	9	46
	in	2.756	1.969	2.36	--	0.47	9.370	7.106	0.59	0.24	0.35	1.81
D2	mm	90	70	80	M5X0.8	12	234	176.5	11	4	5	42
	in	3.543	2.756	3.15	--	0.47	9.213	6.949	0.43	0.16	0.20	1.65
D8	mm	90	70	80	M6X1.0	21	239	181.5	16	9	10	47
	in	3.543	2.756	3.15	--	0.83	9.409	7.146	0.63	0.35	0.39	1.85
D3	mm	100	80	86	M6X1.0	16	234	176.5	11	4	5	42
	in	3.937	3.150	3.39	--	0.63	9.213	6.949	0.43	0.16	0.20	1.65
D4	mm	98.43	73.025	83	M5X0.8	12	234	176.5	11	4	5	42
(NEMA34)	in	3.875	2.875	3.27	--	0.47	9.213	6.949	0.43	0.16	0.20	1.65
D4+Spacer	mm	98.43	73.025	83	M5X0.8	12	242	184.5	19	3	13	50
(NEMA34)	in	3.875	2.875	3.27	--	0.47	9.528	7.264	0.75	0.12	0.51	1.97
D5	mm	75	60	67	M5X0.8	12	234	176.5	11	4	5	42
	in	2.953	2.362	2.64	--	0.47	9.213	6.949	0.43	0.16	0.20	1.65
D6	mm	115	95	100	M6X1.0	16	234	176.5	11	4	5	42
	in	4.528	3.740	3.94	--	0.63	9.213	6.949	0.43	0.16	0.20	1.65
D9	mm	66.68	38.100	60	M4X0.7	10	234	176.5	11	4	5	42
(NEMA23)	in	2.625	1.500	2.36	--	0.39	9.213	6.949	0.43	0.16	0.20	1.65
D14	mm	66.68	38.100	60	M5X0.8	-	242	184.5	18	11	13	50
	in	2.625	1.500	2.36	--	-	9.528	7.264	0.71	0.43	0.51	1.97

NEV D-Frame, 2-Stage Dimensions, Solid / Hollow Output Shaft Type – Ratios: 5:1, 9:1, 15:1, 27:1

Adapter	Unit	Bolt Circle LC	Pilot LH	Square LD	Tapping Bolt LJ	Depth Y	Length		Plug LK	Flange Depth		
							L	CL		LF	LG	ML
D10	mm	63	40	60	M4x0.7	10	234	176.5	11	4	5	42
	in	2.480	1.575	2.36	--	0.39	9.213	6.949	0.43	0.16	0.20	1.65
D11	mm	95	80	86	M6x1.0	16	234	176.5	11	4	5	42
	in	3.740	3.150	3.39	--	0.63	9.213	6.949	0.43	0.16	0.20	1.65

NEV D-Frame (115mm) 2-Stage Dimensions – Ratios: 5:1, 9:1, 15:1, 27:1

Solid Output Shaft Type

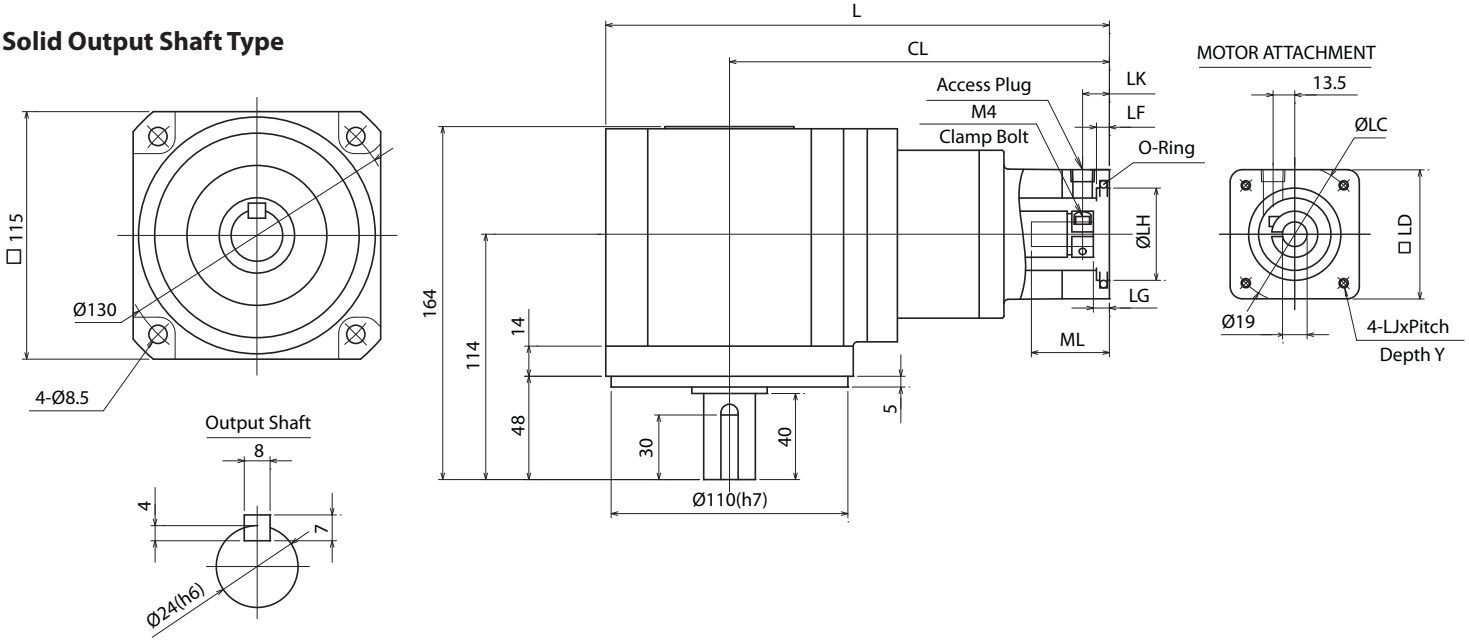

Hollow Output Shaft Type

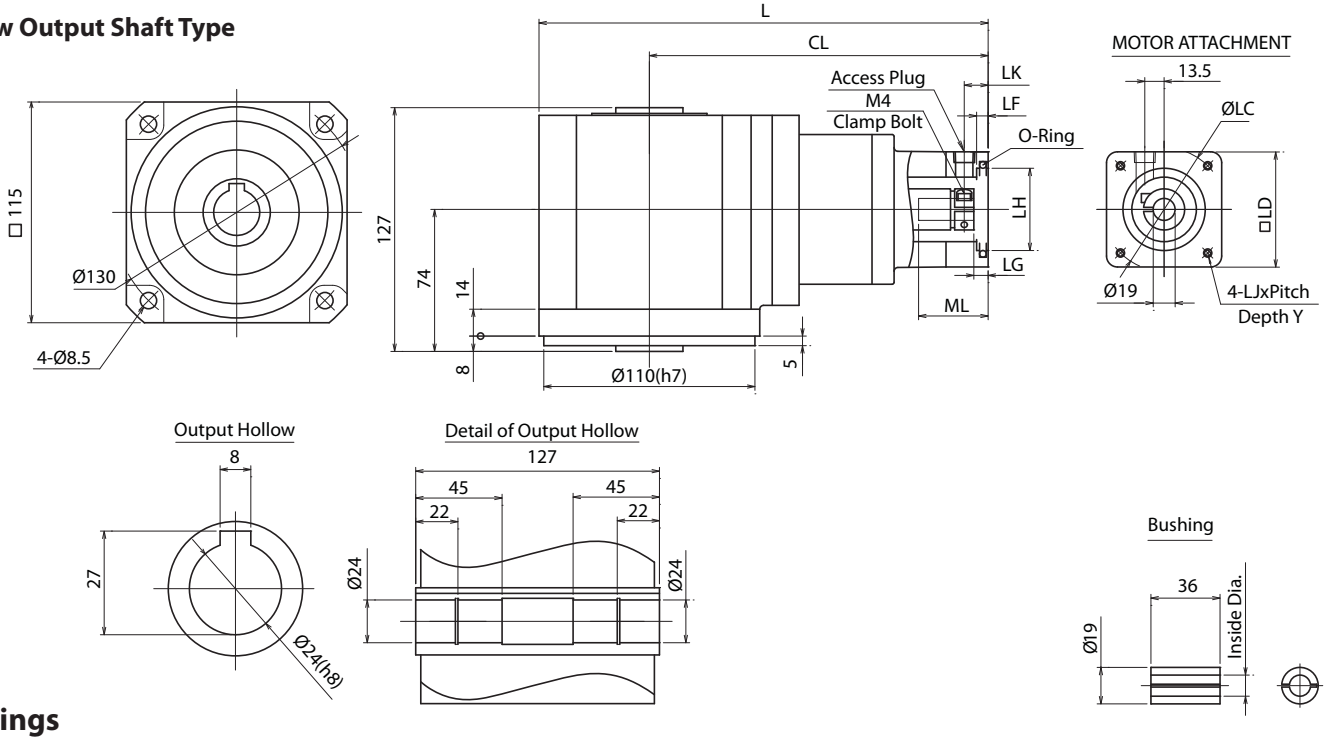

Bushings

Bushing	1901	1902	1903	1904	1905	1906	1907	1908	1909	1910	1911
Inside	11	14	16	9.525	12.700	15.875	12	10	9	8	6.350
Diameter	0.433	0.551	0.630	0.375	0.500	0.625	0.472	0.394	0.354	0.315	0.250

NEV D-Frame – 3-Stage Specifications

Frame Size	**D (115mm)**				
Stage	**3-Stage**				
Ratio	Units	Note	45	75	105
Nominal Output Torque	[Nm]	--	45	50	50
Maximum Acceleration Torque	[Nm]	--	80	80	80
Emergency Stop Torque	[Nm]	--	180	180	180
Nominal Input Speed	[rpm]	--	3000		
Maximum Input Speed	[rpm]	--	6000		
No Load Running Torque	[Nm]	--	0.355		
Permitted Radial Load	[N]	--	2600	2600	2600
Permitted Axial Load	[N]	--	1300	1300	1300
Moment of Inertia (≤Ø14)	[kgcm2]	--	0.806	0.694	0.648
Moment of Inertia (≤ Ø19)	[kgcm2]	--	--	--	--
Efficiency	[%]	--	80		
Torsional Rigidity	[Nm/arcmin]	--	1.5		
Maximum Torsional Backlash	[Arc-min]	--	≤ 30		
Noise Level	[dB]	--	≤ 67		
Protection Class	--	--	IP65		
Ambient Temperature	[°C]	--	0-40		
Permitted Housing Temperature	[°C]	--	90		
Weight (Solid Output Shaft)	[kg]	--	7.3		
Weight (Hollow Output Shaft)	[kg]	--	6.9		

NEV D-Frame, 3-Stage Dimensions, Solid / Hollow Output Shaft Type – Ratios: 45:1, 75:1, 105:1

Adapter	**Unit**	**Bolt Circle LC**	**Pilot LH**	**Square LD**	**Tapping Bolt LJ**	**Depth Y**	**Length**		**Plug LK**	**Flange Depth**		
							L	**CL**		**LF**	**LG**	**ML**
D1	mm	60	50	60	M4x0.7	10	236.5	179	11	4	5	42
	in	2.362	1.969	2.36	--	0.39	9.311	7.047	0.43	0.16	0.20	1.65
D1	mm	70	50	60	M4x0.7	10	236.5	179	11	4	5	42
	in	2.756	1.969	2.36	--	0.39	9.311	7.047	0.43	0.16	0.20	1.65
D7	mm	70	50	60	M5x0.8	12	240.5	183	15	6	9	46
	in	2.756	1.969	2.36	--	0.47	9.469	7.205	0.59	0.24	0.35	1.81
D2	mm	90	70	80	M5X0.8	12	236.5	179	11	4	5	42
	in	3.543	2.756	3.15	--	0.47	9.311	7.047	0.43	0.16	0.20	1.65
D8	mm	90	70	80	M6X1.0	21	241.5	184	16	9	10	47
	in	3.543	2.756	3.15	--	0.83	9.508	7.244	0.63	0.35	0.39	1.85
D3	mm	100	80	86	M6X1.0	16	236.5	179	11	4	5	42
	in	3.937	3.150	3.39	--	0.63	9.311	7.047	0.43	0.16	0.20	1.65
D4	mm	98.43	73.025	83	M5X0.8	12	236.5	179	11	4	5	42
(NEMA34)	in	3.875	2.875	3.27	--	0.47	9.311	7.047	0.43	0.16	0.20	1.65
D4+Spacer	mm	98.43	73.025	83	M5X0.8	12	244.5	187	19	3	13	50
(NEMA34)	in	3.875	2.875	3.27	--	0.47	9.626	7.362	0.75	0.12	0.51	1.97
D5	mm	75	60	67	M5X0.8	12	236.5	179	11	4	5	42
	in	2.953	2.362	2.64	--	0.47	9.311	7.047	0.43	0.16	0.20	1.65
D6	mm	115	95	100	M6X1.0	16	236.5	179	11	4	5	42
	in	4.528	3.740	3.94	--	0.63	9.311	7.047	0.43	0.16	0.20	1.65
D9	mm	66.68	38.100	60	M4X0.7	10	236.5	179	11	4	5	42
(NEMA23)	in	2.625	1.500	2.36	--	0.39	9.311	7.047	0.43	0.16	0.20	1.65
D14	mm	66.68	38.100	60	M5X0.8	12	244.5	187	18	11	13	50
	in	2.625	1.500	2.36	--	0.47	9.626	7.362	0.71	0.43	0.51	1.97

NEV D-Frame, 3-Stage Dimensions, Solid / Hollow Output Shaft Type – Ratios: 45:1, 75:1, 105:1

Adapter	Unit	Bolt Circle LC	Pilot LH	Square LD	Tapping Bolt LJ	Depth Y	Length		Plug LK	Flange Depth		
							L	CL		LF	LG	ML
D10	mm	63	40	60	M4x0.7	10	236.5	179	11	4	5	42
	in	2.480	1.575	2.36	--	0.39	9.311	7.047	0.43	0.16	0.20	1.65
D11	mm	95	80	86	M6x1.0	16	236.5	179	11	4	5	42
	in	3.740	3.150	3.39	--	0.63	9.311	7.047	0.43	0.16	0.20	1.65

NEV D-Frame (115mm) 3-Stage Dimensions – Ratios: 45:1, 75:1, 105:1

Solid Output Shaft Type

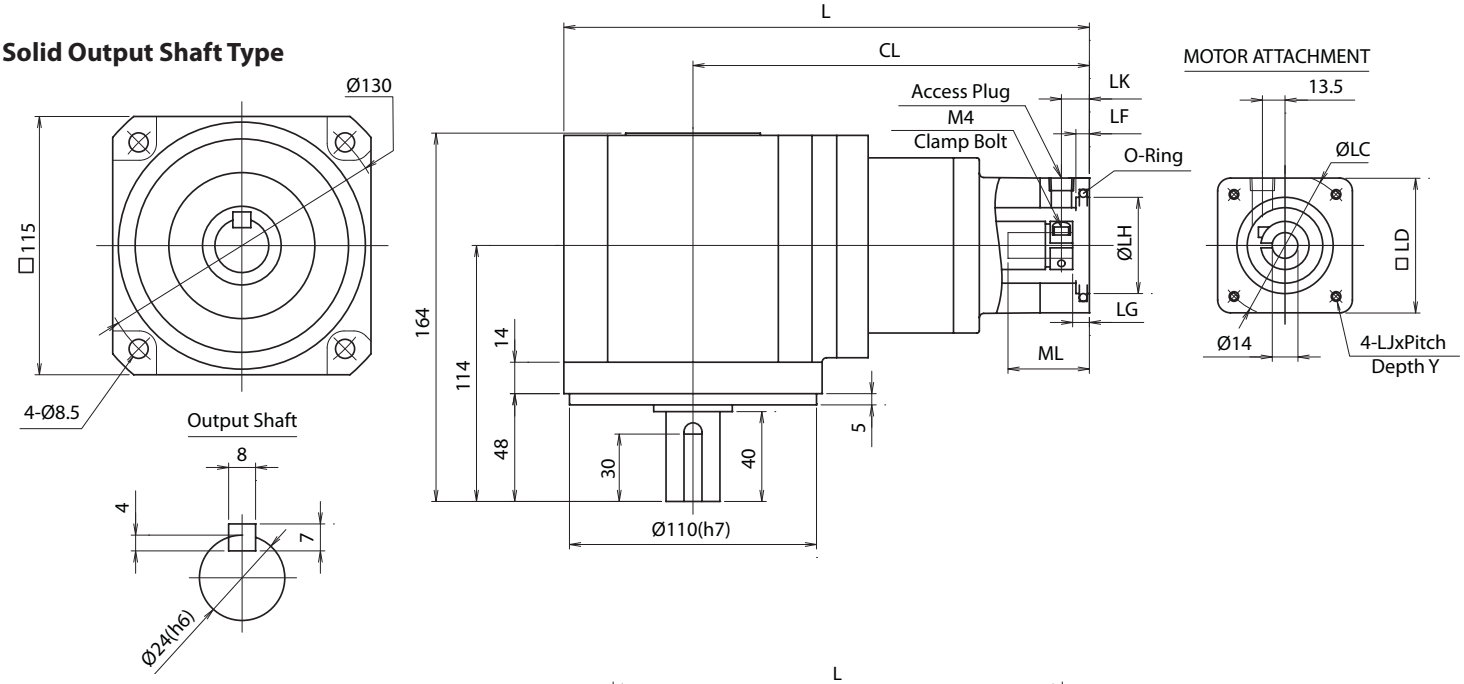

Hollow Output Shaft Type

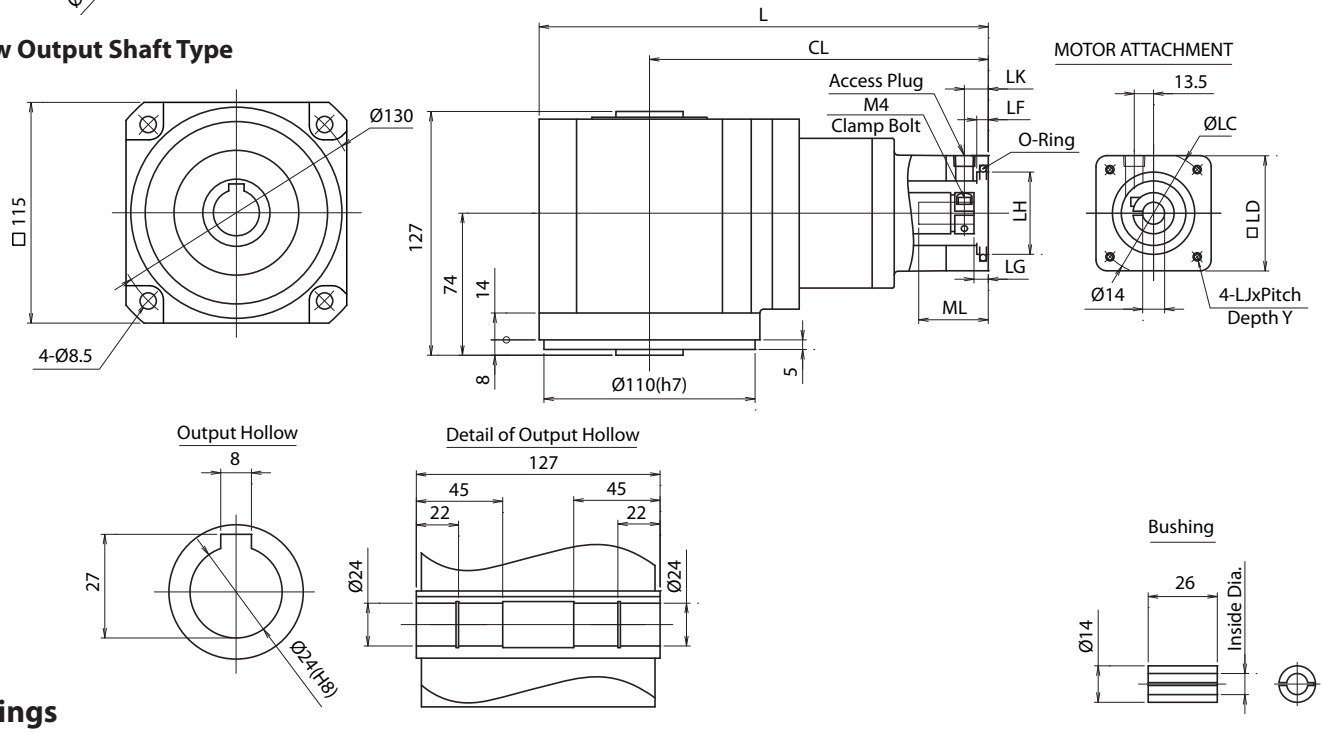

Bushings

Bushing	1401	1402	1403	1404	1405	1406	1407	1408	1409	1410
Inside	6	8	11	6.350	9.525	12.700	12	10	9	5
Diameter	0.236	0.315	0.433	0.250	0.375	0.500	0.472	0.394	0.354	0.197

NEV E-Frame – 2-Stage Specifications

Frame Size	**E (145mm)**					
Stage	**2-Stage**					
Ratio	Units	Note	5	9	15	27
Nominal Output Torque	[Nm]	--	50	50	55	60
Maximum Acceleration Torque	[Nm]	--	100	140	140	180
Emergency Stop Torque	[Nm]	--	250	250	250	300
Nominal Input Speed	[rpm]	--	3000			
Maximum Input Speed	[rpm]	--	6000			
No Load Running Torque	[Nm]	--	1.21			
Permitted Radial Load	[N]	--	3000	3000	3000	4000
Permitted Axial Load	[N]	--	1500	1500	1500	2000
Moment of Inertia (≤Ø19)	[kgcm2]	--	--	--	--	--
Moment of Inertia (≤ Ø24)	[kgcm2]	--	3.559	2.940	1.193	2.044
Efficiency	[%]	--	85			
Torsional Rigidity	[Nm/arcmin]	--	3.2	4.0	4.0	4.0
Maximum Torsional Backlash	[Arc-min]	--	≤ 30			
Noise Level	[dB]	--	≤ 74			
Protection Class	--	--	IP65			
Ambient Temperature	[°C]	--	0-40			
Permitted Housing Temperature	[°C]	--	90			
Weight (Solid Output Shaft)	[kg]	--	11.0			
Weight (Hollow Output Shaft)	[kg]	--	10.0			

NEV E-Frame, 2-Stage Dimensions, Solid / Hollow Output Shaft Type – Ratios: 5:1, 9:1, 15:1, 27:1

Adapter	**Unit**	**Bolt Circle LC**	**Pilot LH**	**Square LD**	**Tapping Bolt LJ**	**Depth Y**	**Length**		**Plug LK**	**Flange Depth**		
							L	**CL**		**LF**	**LG**	**ML**
E1	mm	115	95	100	M6x1.0	15	282.5	210	15	4	7	57
	in	4.528	3.740	3.94	--	0.59	11.122	8.268	0.59	0.16	0.28	2.24
E2	mm	90	70	80	M5x0.8	12	282.5	210	14	4	7	57
	in	3.543	2.756	3.15	--	0.47	11.122	8.268	0.55	0.16	0.28	2.24
E7	mm	90	70	80	M6x1.0	15	285.5	213	17	6	10	60
	in	3.543	2.756	3.15	--	0.59	11.240	8.386	0.67	0.24	0.39	2.36
E3	mm	100	80	90	M6x1.0	15	282.5	210	14	4	7	57
	in	3.937	3.150	3.54	--	0.59	11.122	8.268	0.55	0.16	0.28	2.24
E4	mm	125.73	55.563	108	M6x1.0	15	282.5	210	15	5	7	57
(NEMA42)	in	4.950	2.188	4.25	--	0.59	11.122	8.268	0.59	0.20	0.28	2.24
E5	mm	145	110	130	M8X1.25	16	285.5	213	18	6	10	60
	in	5.709	4.331	5.12	--	0.63	11.240	8.386	0.71	0.24	0.39	2.36
E6	mm	130	110	115	M8X1.25	16	282.5	210	15	6	7	60
	in	5.118	4.331	4.53	--	0.63	11.122	8.268	0.59	0.24	0.28	2.36
E11	mm	98.43	73.025	90	M5x0.8	12	282.5	210	14	4	7	57
(NEMA34)	in	3.875	2.875	3.54	--	0.47	11.122	8.268	0.55	0.16	0.28	2.24
E12	mm	149.22	114.300	130	--	-	285.5	213	18	6	10	60
(NEMA56)	in	5.875	4.500	5.12	3/8UNC-16	-	11.240	8.386	0.71	0.24	0.39	2.36
E13	mm	66.7	38.1	80	M4x0.7	10	282.5	210	14	4	7	57
	in	2.626	1.500	3.15	--	0.39	11.122	8.268	0.55	0.16	0.28	2.24
E14	mm	70	50	80	M4x0.7	10	282.5	210	14	4	7	57
	in	2.756	1.969	3.15	--	0.39	11.122	8.268	0.55	0.16	0.28	2.24
E15	mm	75	60	80	M5x0.8	12	282.5	210	14	4	7	57
	in	2.953	2.362	3.15	--	0.47	11.122	8.268	0.55	0.16	0.28	2.24

NEV E-Frame (145mm) 2-Stage Dimensions – Ratios: 5:1, 9:1, 15:1, 27:1

Solid Output Shaft Type

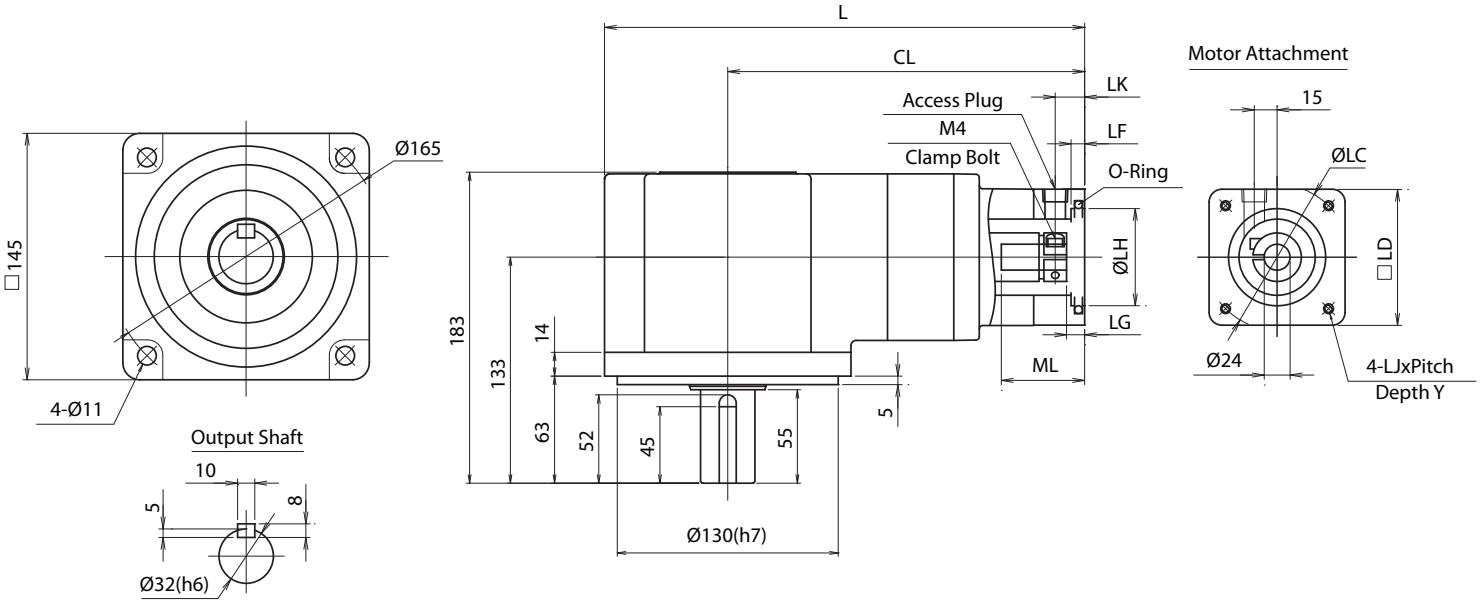

Hollow Output Shaft Type

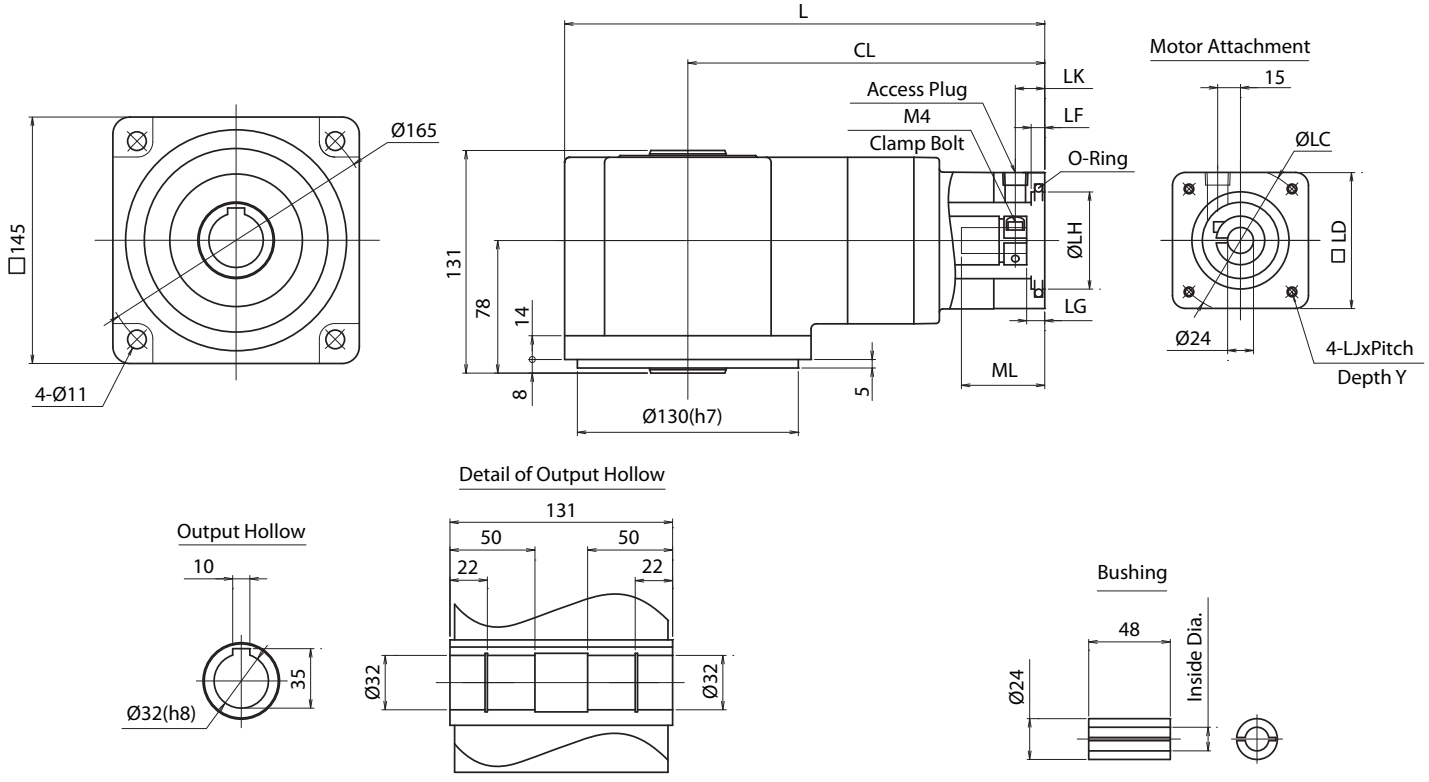

Bushings

Bushing	2401	2402	2403	2404	2405	2406	2407	2408
Inside	14	16	19	12.700	15.875	22	19.050	11
Diameter	0.551	0.630	0.748	0.500	0.625	0.866	0.750	0.433

NEV E-Frame – 3-Stage Specifications

Frame Size	**E (145mm)**				
Stage	**3-Stage**				
Ratio	Units	Note	45	75	105
Nominal Output Torque	[Nm]	--	80	90	90
Maximum Acceleration Torque	[Nm]	--	180	180	180
Emergency Stop Torque	[Nm]	--	300	300	300
Nominal Input Speed	[rpm]	--	3000		
Maximum Input Speed	[rpm]	--	6000		
No Load Running Torque	[Nm]	--	0.961		
Permitted Radial Load	[N]	--	4000	4000	4000
Permitted Axial Load	[N]	--	2000	2000	2000
Moment of Inertia (≤Ø19)	[kgcm2]	--	1.878	1.303	1.184
Moment of Inertia (≤ Ø24)	[kgcm2]	--	--	--	--
Efficiency	[%]	--	80		
Torsional Rigidity	[Nm/arcmin]	--	4.0		
Maximum Torsional Backlash	[Arc-min]	--	≤ 30		
Noise Level	[dB]	--	≤ 69		
Protection Class	--	--	IP65		
Ambient Temperature	[°C]	--	0-40		
Permitted Housing Temperature	[°C]	--	90		
Weight (Solid Output Shaft)	[kg]	--	11.4		
Weight (Hollow Output Shaft)	[kg]	--	10.4		

NEV E-Frame, 3-Stage Dimensions, Solid / Hollow Output Shaft Type – Ratios: 45:1, 75:1, 105:1

Adapter	**Unit**	**Bolt Circle LC**	**Pilot LH**	**Square LD**	**Tapping Bolt LJ**	**Depth Y**	**Length**		**Plug LK**	**Flange Depth**		
							L	**CL**		**LF**	**LG**	**ML**
E1	mm	115	95	100	M6x1.0	15	283.5	211	15	4	7	57
	in	4.528	3.740	3.94	-	0.59	11.161	8.307	0.59	0.16	0.28	2.24
E2	mm	90	70	80	M5x0.8	12	283.5	211	14	4	7	57
	in	3.543	2.756	3.15	-	0.47	11.161	8.307	0.55	0.16	0.28	2.24
E7	mm	90	70	80	M6x1.0	15	286.5	214	17	6	10	60
	in	3.543	2.756	3.15	-	0.59	11.280	8.425	0.67	0.24	0.39	2.36
E3	mm	100	80	90	M6x1.0	15	283.5	211	14	4	7	57
	in	3.937	3.150	3.54	-	0.59	11.161	8.307	0.55	0.16	0.28	2.24
E4	mm	125.73	55.563	108	M6x1.0	15	283.5	211	15	5	7	57
(NEMA42)	in	4.950	2.188	4.25	-	0.59	11.161	8.307	0.59	0.20	0.28	2.24
E5	mm	145	110	130	M8X1.25	16	286.5	214	18	6	10	60
	in	5.709	4.331	5.12	-	0.63	11.280	8.425	0.71	0.24	0.39	2.36
E6	mm	130	110	115	M8X1.25	16	283.5	211	15	6	7	60
	in	5.118	4.331	4.53	-	0.63	11.161	8.307	0.59	0.24	0.28	2.36
E11	mm	98.43	73.025	90	M5x0.8	12	283.5	211	14	4	7	57
(NEMA34)	in	3.875	2.875	3.54	-	0.47	11.161	8.307	0.55	0.16	0.28	2.24
E12	mm	149.22	114.300	130	-	-	286.5	214	18	6	10	60
(NEMA56)	in	5.875	4.500	5.12	3/8UNC-16	-	11.280	8.425	0.71	0.24	0.39	2.36
E13	mm	66.7	38.1	80	M4x0.7	10	283.5	211	14	4	7	57
	in	2.626	1.500	3.15	-	0.39	11.161	8.307	0.55	0.16	0.28	2.24
E14	mm	70	50	80	M4x0.7	10	283.5	211	14	4	7	57
	in	2.756	1.969	3.15	-	0.39	11.161	8.307	0.55	0.16	0.28	2.24
E15	mm	75	60	80	M5x0.8	12	283.5	211	14	4	7	57
	in	2.953	2.362	3.15	-	0.47	11.161	8.307	0.55	0.16	0.28	2.24

NEV E-Frame (145mm) 3-Stage Dimensions – Ratios: 45:1, 75:1, 105:1

Solid Output Shaft Type

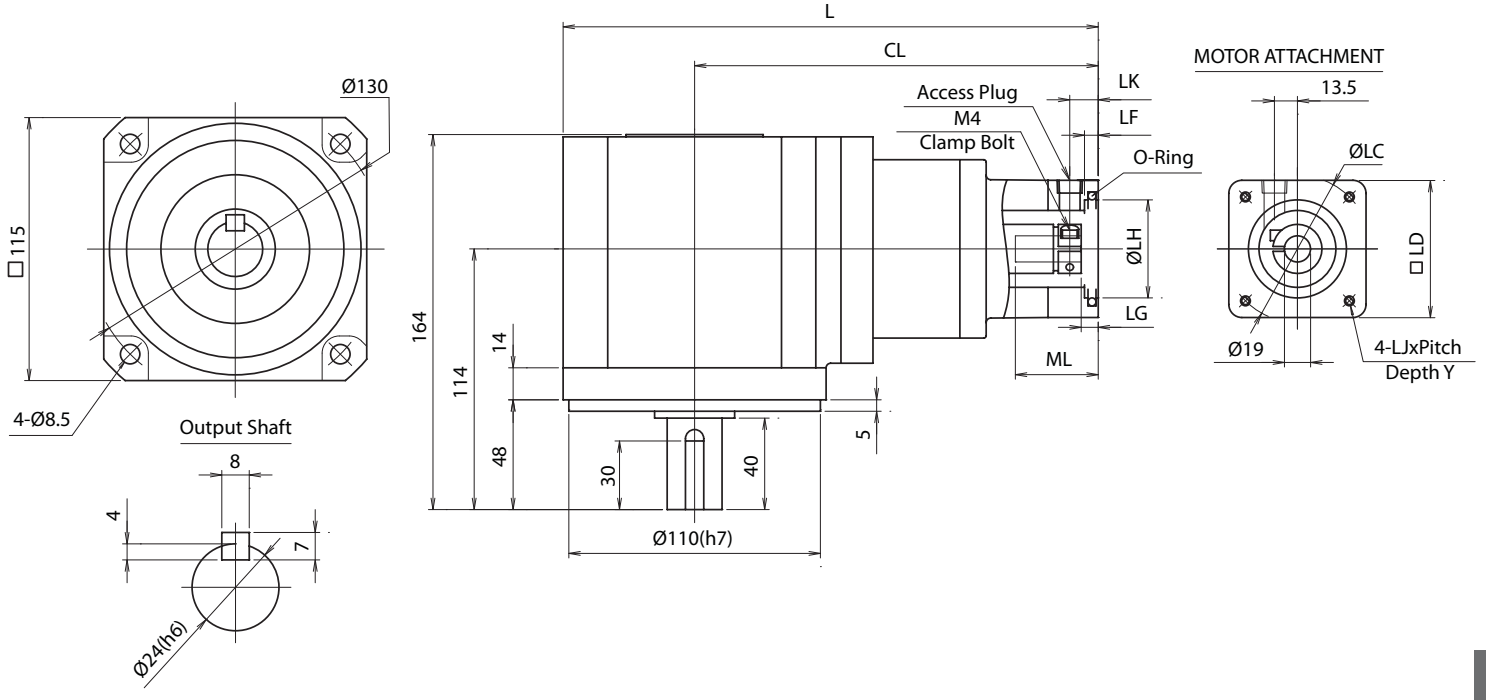

Hollow Output Shaft Type

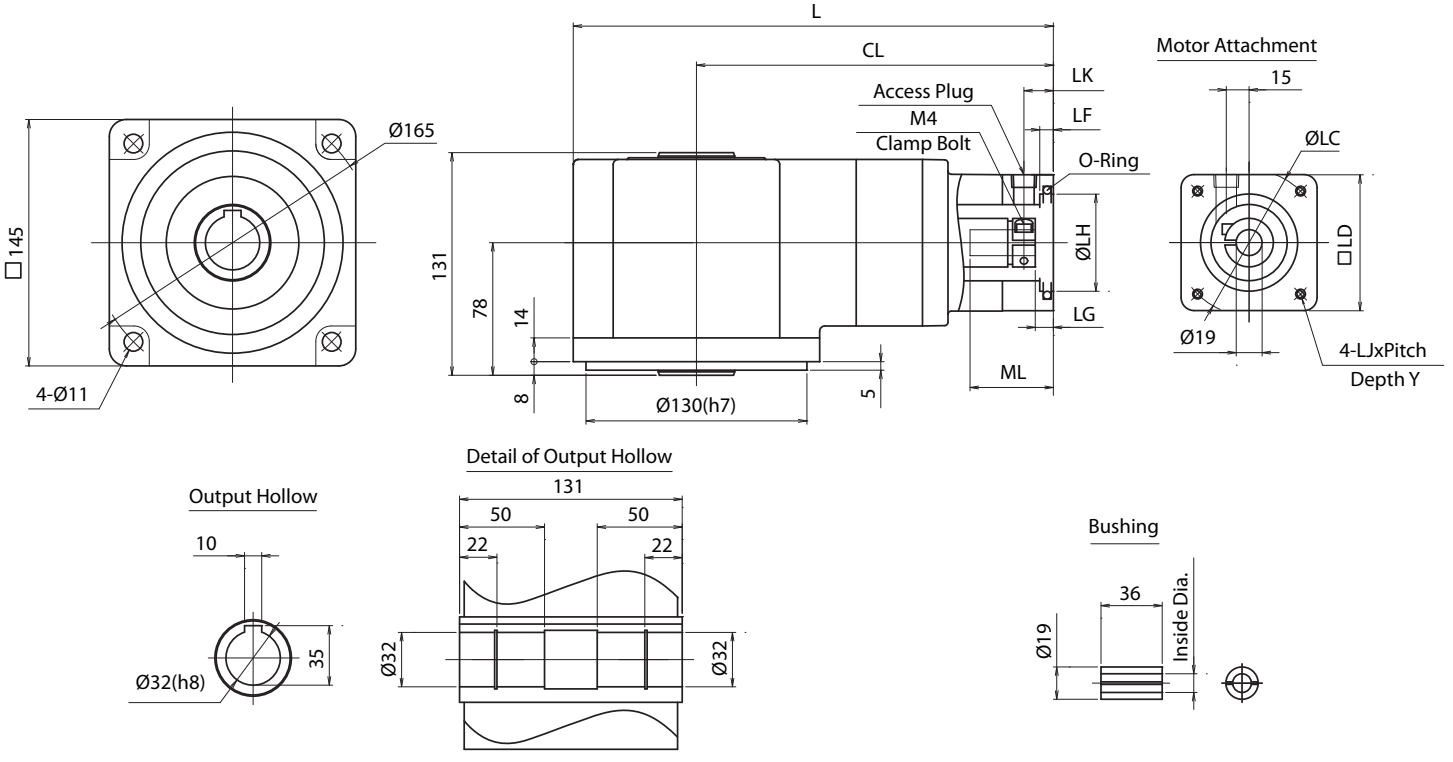

Bushings

Bushing	1901	1902	1903	1904	1905	1906	1907	1908	1909	1910	1911
Inside	11	14	16	9.525	12.700	15.875	12	10	9	8	6.350
Diameter	0.433	0.551	0.630	0.375	0.500	0.625	0.472	0.394	0.354	0.315	0.250

EVL-SERIES

The right-angle equivalent to the VRL series, the EVL provides the customer with an excellent solution when space and clearance are a serious limitation. For a right-angle solution, the EVL Series is an intelligent choice providing impressive precision and durability at an exceptional value. Using a 1:1 spiral bevel gear for the right-angle connection, a 6 arc-min backlash rating can be achieved by the EVL series at 2 stage reduction ratios.

The EVL planetary gearbox is a perfect solution for OEM equipment such as packaging, assembly automation, and any advanced conveyor systems implementing sortation or multi-speed/positioning. The EVL series gearheads are offered in a variety of frame sizes and ratios, and they can handle maximum loads approaching 600 nM.

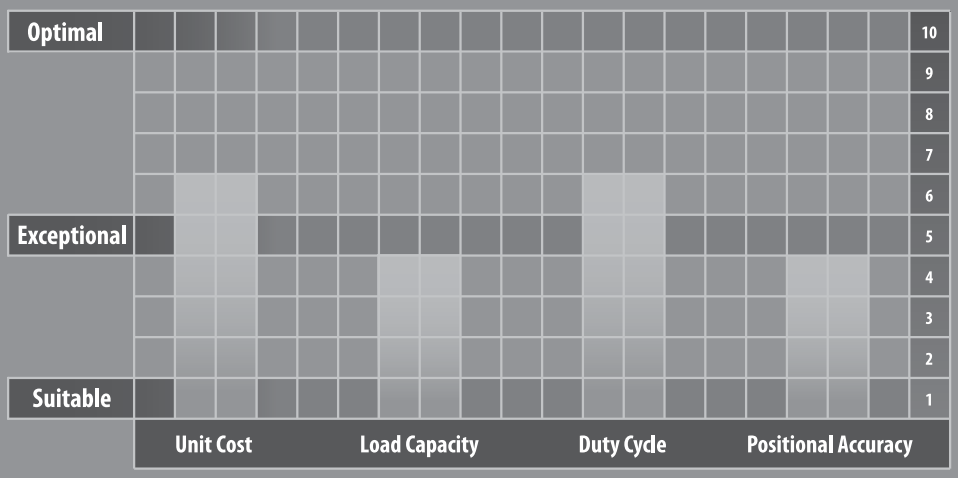

EVL

EVL-SERIES

- Industry standard mounting dimensions
- Large variety of reduction ratios to choose from
- Thread-in mounting style
- Best-in-class value for right-angle reducers
- Low backlash (≤6 arc-min)
- Space-saving design when minimal envelope available
- Readily available

EVL-Series – Features

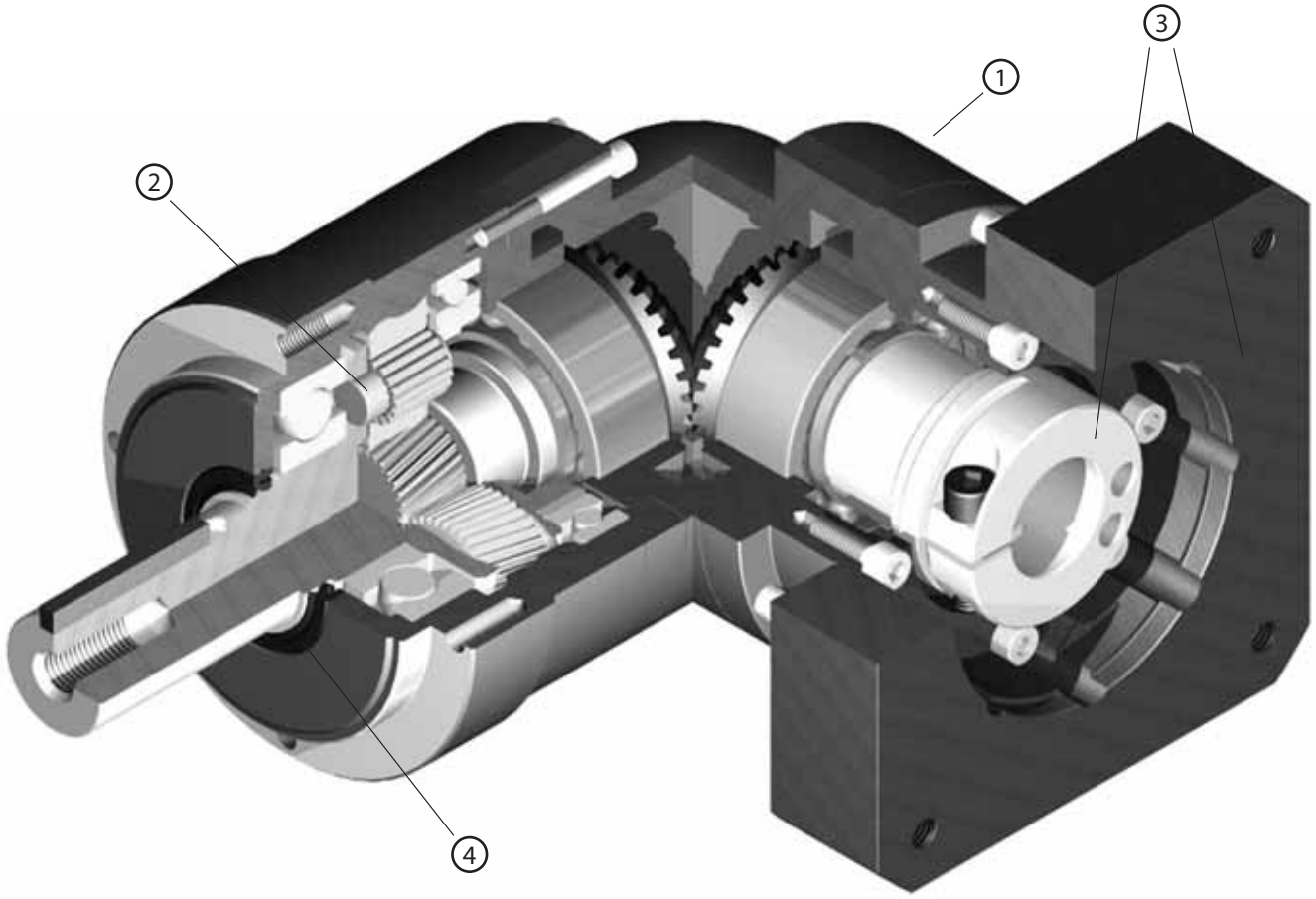

1. Space-saving features, motor can be located at a 90 degree position from the reducer providing a more compact footprint
2. High rigidity and torque capacity are achieved by using uncaged needle roller bearings
3. Adapter-bushing connection, enable a simple, effective attachment to most servo motors
4. No leakage through the seal, high viscosity, anti-separation grease does not liquefy and does not migrate away from the gears
5. No need to replace the grease for the life of the unit. The reducer can be positioned in any orientation

EVL-Series – Model Code

EV	L	–	090	B	–	7	–	K	8	–	19HB16

- 19HB16: ＊ Adapter flange code
- 8: Backlash
  - 070, 090, 120, 155: 6arc-min (2stage), 9arc-min (3stage)
  - 205, 235: 8arc-min (2stage), 11arc-min (3stage)
- K: Output style
  - K・・・ Shaft with key
  - S・・・ Smooth shaft
- 7: Ratio
  - 2 Stage: 3, 4, 5, 6, 7, 8, 9, 10
  - 3 Stage: 15, 16, 20, 25, 28, 30, 35, 40, 45, 50, 60, 70, 80, 90, 100
- B: Generation of design
- 090: Frame size 070, 090, 120, 155, 205, 235
- L: Series name EVL Series
- EV: Model name for ABLE reducer

*1) Adapter flange code
Adapter flange code varies depending on the motor.

Contact us for additional information or refer to our online reducer selection tool.
Selection tool www.nidec-shimpo.co.jp/selection/eng

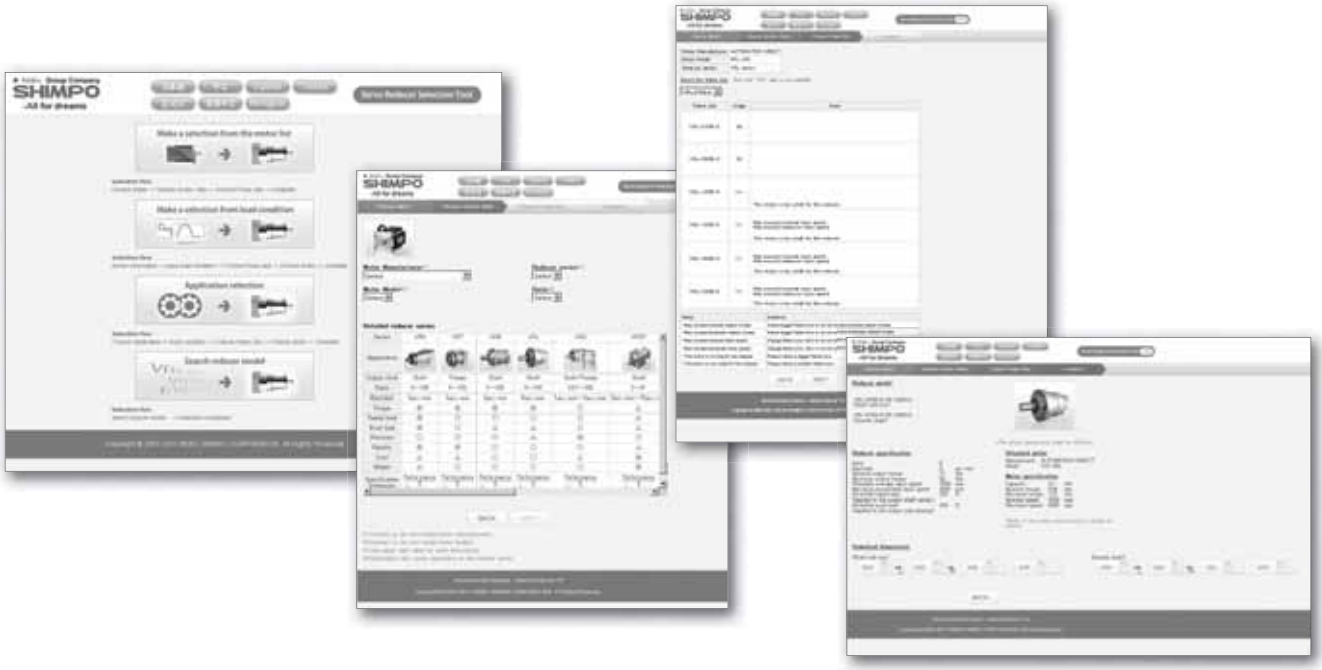

EVL-070 – 2-Stage Specifications

Frame Size	**070**									
Stage	**2-Stage**									
Ratio	Unit	Note	3	4	5	6	7	8	9	10
Nominal Output Torque	[Nm]	*1	12	16	22	24	24	24	16	16
Maximum Acceleration Torque	[Nm]	*2	24	32	40	45	45	45	32	32
Emergency Stop Torque	[Nm]	*3	50	65	80	90	90	90	65	65
Nominal Input Speed	[rpm]	*4	3000							
Maximum Input Speed	[rpm]	*5	6000							
No Load Running Torque	[Nm]	*6	0.33							
Permitted Radial Load	[N]	*7	430	470	510	540	570	600	620	640
Permitted Axial Load	[N]	*8	310	360	390	430	460	480	510	530
Maximum Radial Load	[N]	*9	1200							
Maximum Axial Load	[N]	*10	1100							
Moment of Inertia (≤ Ø 8)	[kgcm2]	--	0.310	0.270	0.250	0.240	0.230	0.230	0.230	0.230
Moment of Inertia (≤ Ø 14)	[kgcm2]	--	0.390	0.340	0.320	0.310	0.310	0.310	0.300	0.300
Moment of Inertia (≤ Ø 19)	[kgcm2]	--	0.580	0.530	0.510	0.500	0.500	0.500	0.490	0.490
Efficiency	[%]	*11	93							
Torsional Rigidity	[Nm/arc-min]	*12	3							
Maximum Torsional Backlash	[arc-min]	--	≤ 6							
Noise Level	[dB]	*13	80							
Protection Class	--	*14	IP54 (IP65)							
Ambient Temperature	[°C]	--	0-40							
Permitted Housing Temperature	[°C]	--	90							
Weight	[kg]	*15	1.9							

EVL-070 – 3-Stage Specifications

Frame Size	**070**									
Stage	**3-Stage**									
Ratio	Unit	Note	15	16	20	25	28	30	35	40
Nominal Output Torque	[Nm]	*1	16	24	24	24	24	16	24	24
Maximum Acceleration Torque	[Nm]	*2	32	45	45	45	45	32	45	45
Emergency Stop Torque	[Nm]	*3	65	90	90	90	90	65	90	90
Nominal Input Speed	[rpm]	*4	3000							
Maximum Input Speed	[rpm]	*5	6000							
No Load Running Torque	[Nm]	*6	0.20							
Permitted Radial Load	[N]	*7	740	750	810	870	910	930	980	100
Permitted Axial Load	[N]	*8	630	650	720	790	830	860	920	970
Maximum Radial Load	[N]	*9	1200							
Maximum Axial Load	[N]	*10	1100							
Moment of Inertia (≤ Ø 8)	[kgcm2]	--	0.073	0.079	0.071	0.071	0.077	0.062	0.070	0.061
Moment of Inertia (≤ Ø 14)	[kgcm2]	--	0.118	0.124	0.116	0.115	0.122	0.106	0.115	0.106
Moment of Inertia (≤ Ø 19)	[kgcm2]	--	--	--	--	--	--	--	--	--
Efficiency	[%]	*11	88							
Torsional Rigidity	[Nm/arc-min]	*12	3							
Maximum Torsional Backlash	[arc-min]	--	≤ 9							
Noise Level	[dB]	*13	80							
Protection Class	--	*14	IP54 (IP65)							
Ambient Temperature	[°C]	--	0-40							
Permitted Housing Temperature	[°C]	--	90							
Weight	[kg]	*15	1.7							

EVL-070 – 3-Stage Specifications

Frame Size	**070**								
Stage	**3-Stage**								
Ratio	Unit	Note	45	50	60	70	80	90	100
Nominal Output Torque	[Nm]	*1	16	24	24	24	24	16	16
Maximum Acceleration Torque	[Nm]	*2	32	45	45	45	45	32	32
Emergency Stop Torque	[Nm]	*3	65	90	90	90	90	65	65
Nominal Input Speed	[rpm]	*4	3000						
Maximum Input Speed	[rpm]	*5	6000						
No Load Running Torque	[Nm]	*6	0.20						
Permitted Radial Load	[N]	*7	1100	1100	1200	1200	1200	1200	1200
Permitted Axial Load	[N]	*8	1000	1100	1100	1100	1100	1100	1100
Maximum Radial Load	[N]	*9	1200						
Maximum Axial Load	[N]	*10	1100						
Moment of Inertia (≤ Ø 8)	[kgcm2]	--	0.070	0.061	0.061	0.061	0.061	0.061	0.061
Moment of Inertia (≤ Ø 14)	[kgcm2]	--	0.115.	0.106	0.106	0.105	0.105	0.105	0.105
Moment of Inertia (≤ Ø 19)	[kgcm2]	--	--	--	--	--	--	--	--
Efficiency	[%]	*11	88						
Torsional Rigidity	[Nm/arc-min]	*12	3						
Maximum Torsional Backlash	[arc-min]	--	≤ 9						
Noise Level	[dB]	*13	80						
Protection Class	--	*14	IP54 (IP65)						
Ambient Temperature	[°C]	--	0-40						
Permitted Housing Temperature	[°C]	--	90						
Weight	[kg]	*15	1.7						

*1) At nominal input speed, service life is 20,000 hours
*2) The maximum torque when starting or stopping operation
*3) The maximum torque allowed under a stress situation (Permitted 1,000 times during service life)
*4) The average input speed
*5) The maximum intermittent input speed
*6) This is the torque at no load applied on the input shaft. The input speed is 3000 rpm for EVL070
*7) At this load and nominal input speed, service life will be 20,000 hours. (The radial load applied to the output side bearing)
*8) At this load and nominal input speed, service life will be 20,000 hours. (The axial load applied to the output shaft center)
*9) The maximum radial load that the reducer can accept
*10) The maximum axial load that the reducer can accept
*11) The efficiency at the nominal torque rating
*12) This does not include the lost motion
*13) Contact NIDEC-SHIMPO for the testing conditions and environment
*14) IP65 (wash-down) is available as an option. Contact NIDEC-SHIMPO for more details and our food grade options
*15) The weight may vary slightly between models

EVL-070 – 2-Stage Dimensions

Input shaft bore ≦φ8

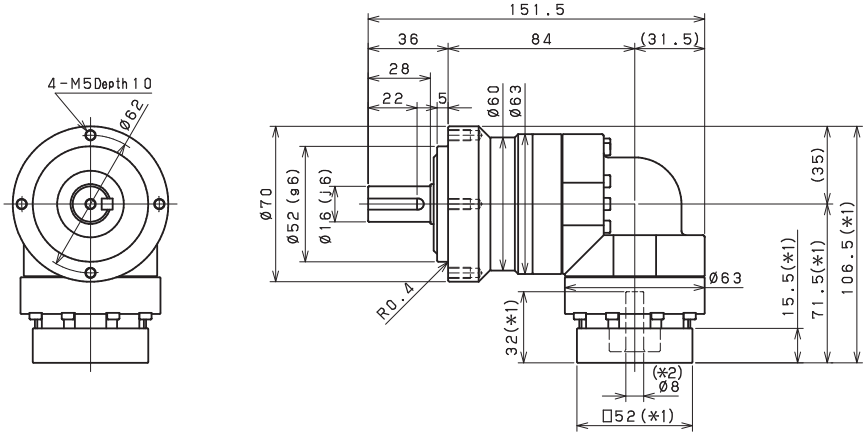

Input shaft bore ≦φ14

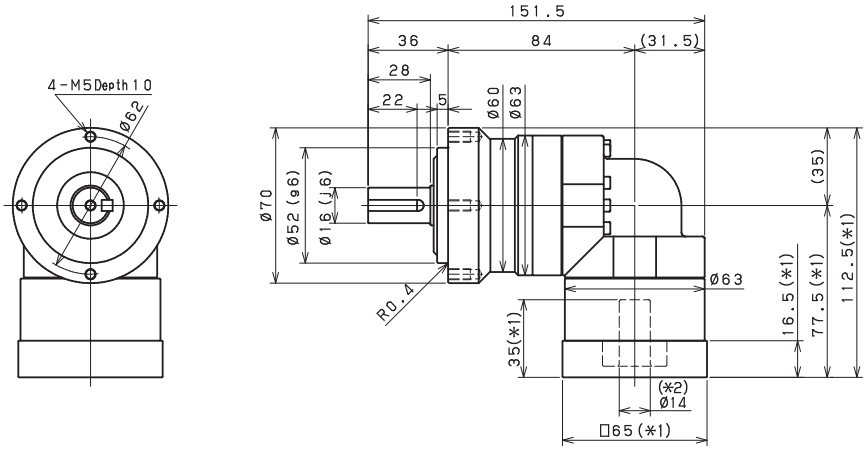

Input shaft bore ≦φ19

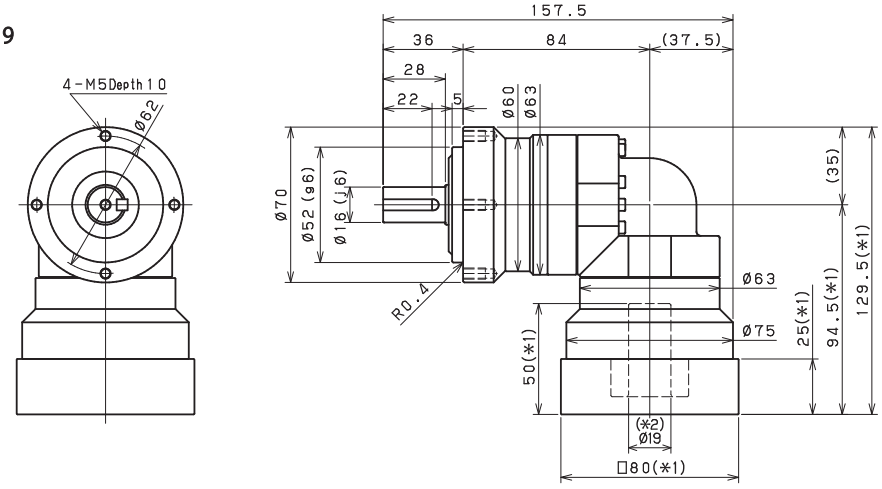

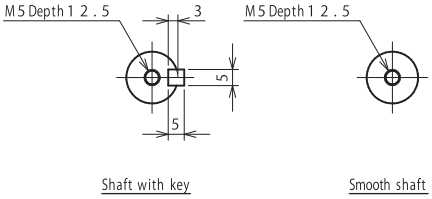

*1) Length will vary depending on motor

*2) Bushing will be inserted to adapt to motor shaft

EVL-070 – 3-Stage Dimensions

Input shaft bore ≦φ8

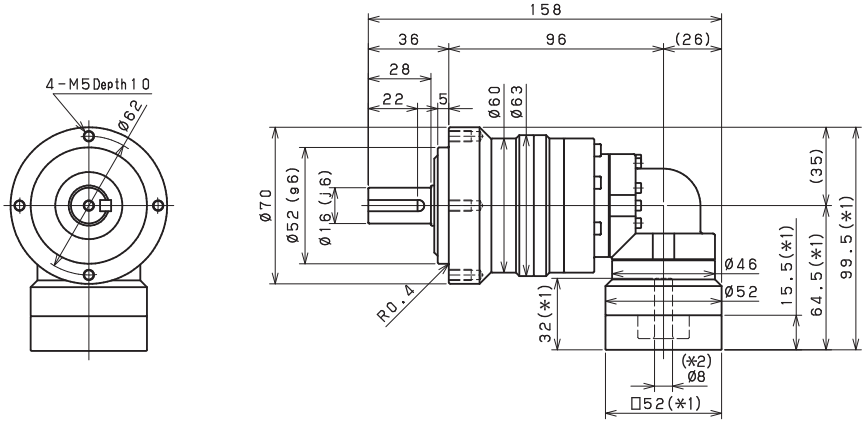

Input shaft bore ≦φ14

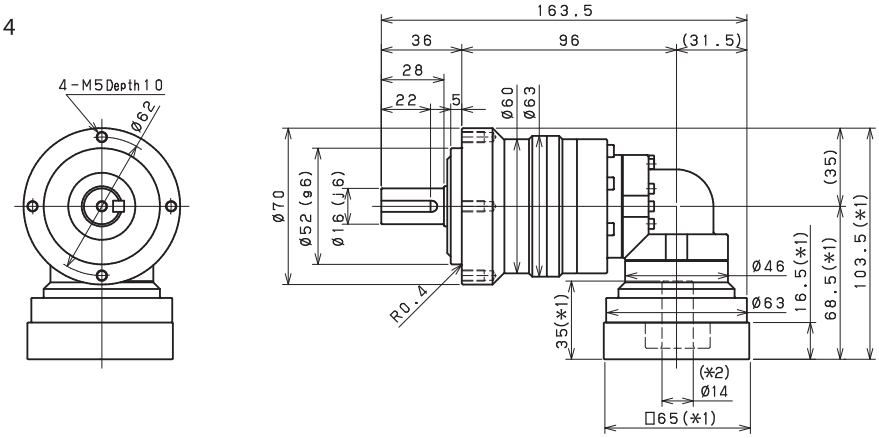

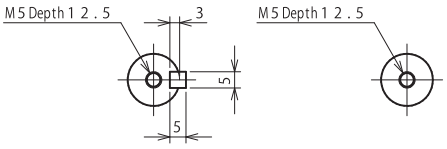

Shaft with key　　Smooth shaft

*1) Length will vary depending on motor

*2) Bushing will be inserted to adapt to motor shaft

EVL

EVL-070 – 2-Stage Adapter Dimensions

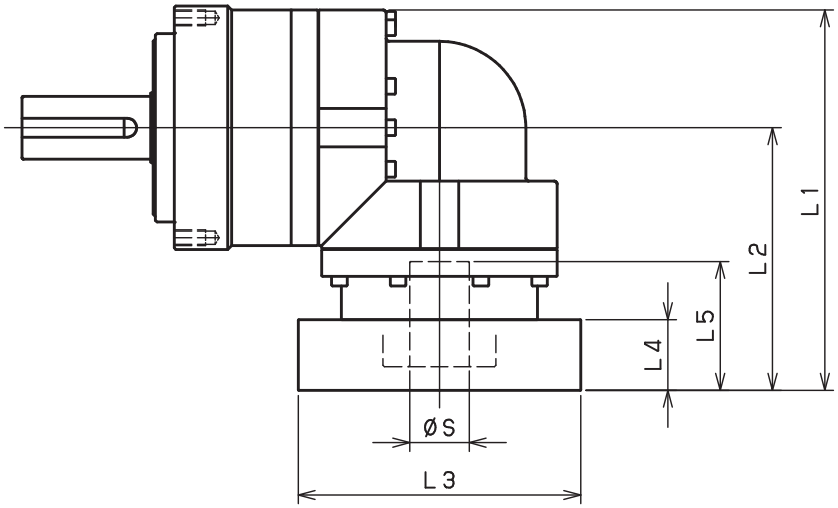

Model number	**: Adapter code	2-Stage				
		L1	L2	L3	L4	L5
EVL-070-□-□-8** (S ≦ 8)	AA•AC•AD•AF•AG•AL•AM•AN•AQ	106.5	71.5	□52	15.5	32
	AB•AE•AH•AJ•AK	111.5	76.5	□52	20.5	37
	BA•BB•BD•BE•BG•BH•BJ	106.5	71.5	□60	15.5	32
	BC•BF	111.5	76.5	□60	20.5	37
	CA	111.5	76.5	□70	20.5	37
EVL-070-□-□-14** (8< S ≦ 14)	BA•BB•BD•BE•BF•BG•BH•BJ•BK•BP	112.5	77.5	□65	16.5	35
	BC•BH•BM•BN	117.5	82.5	□65	21.5	40
	BL	122.5	87.5	□65	26.5	45
	CA•CC	112.5	77.5	□70	16.5	35
	CB	117.5	82.5	□70	21.5	40
	DA•DB•DC•DD•DF•DH•DJ	112.5	77.5	□80	16.5	35
	DE•DL	117.5	82.5	□80	21.5	40
	DG•DK	122.5	87.5	□80	26.5	45
	EA•EB•EC•EF•EG•EK•EL	112.5	77.5	□90	16.5	35
	EJ•EM	117.5	82.5	□90	21.5	40
	ED•EE•EH	122.5	87.5	□90	26.5	45
	FA	112.5	77.5	□100	16.5	35
	FB	122.5	87.5	□100	26.5	45
EVL-070-□-□-19** (14< S≦19)	DA•DB•DC	129.5	94.5	□80	25	50
	DD	139.5	104.5	□80	35	60
	DE	134.5	99.5	□80	30	55
	EA	134.5	99.5	□90	30	55
	EB•ED	129.5	94.5	□90	25	50
	EC	139.5	104.5	□90	35	60
	FA	129.5	94.5	□100	25	50
	FB	139.5	104.5	□100	35	60

*1) Double reduction : 1/3~ 1/10

*2) Bushing will be inserted to adapt to motor shaft

For an explanation on the Adapter Flange Code, please turn to page 422.

A more comprehensive adapter flange offering can be found using the NIDEC-SHIMPO Online Selector Tool. The variety is constantly expanding and being updated on the Selector Tool. If you have any questions or need any support, contact NIDEC-SHIMPO.

EVL-070 – 3-Stage Adapter Dimensions

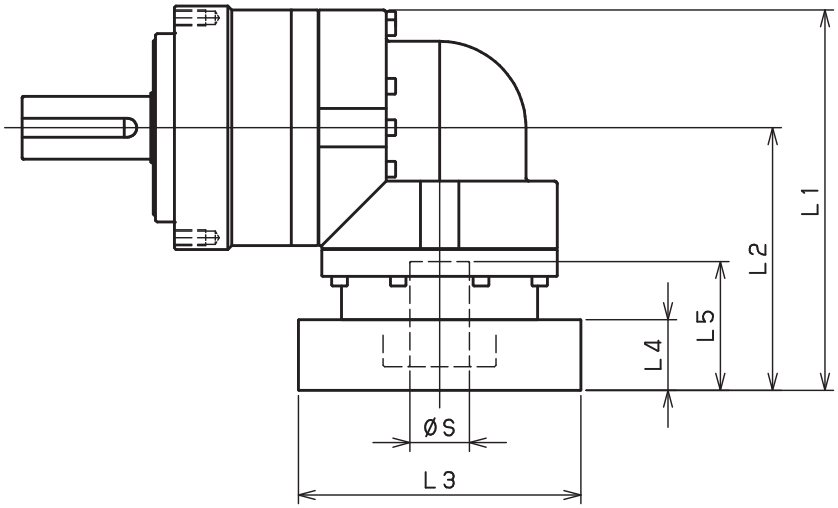

Model number	**: Adapter code	3-Stage				
		L1	L2	L3	L4	L5
EVL-070-□-□-8** (S ≦ 8)	AA•AC•AD•AF•AG•AL•AM•AN•AQ	99.5	64.5	□52	15.5	32
	AB•AE•AH•AJ•AK	104.5	69.5	□52	20.5	37
	BA•BB•BD•BE•BG•BH•BJ	99.5	64.5	□60	15.5	32
	BC•BF	104.5	69.5	□60	20.5	37
	CA	104.5	69.5	□70	20.5	37
EVL-070-□-□-14** (8< S ≦ 14)	BA•BB•BD•BE•BF•BG•BH•BJ•BK•BP	103.5	68.5	□65	16.5	35
	BC•BH•BM•BN	108.5	73.5	□65	21.5	40
	BL	113.5	78.5	□65	26.5	45
	CA•CC	103.5	68.5	□70	16.5	35
	CB	108.5	73.5	□70	21.5	40
	DA•DB•DC•DD•DF•DH•DJ	103.5	68.5	□80	16.5	35
	DE•DL	108.5	73.5	□80	21.5	40
	DG•DK	113.5	78.5	□80	26.5	45
	EA•EB•EC•EF•EG•EK•EL	103.5	68.5	□90	16.5	35
	EJ•EM	108.5	73.5	□90	21.5	40
	ED•EE•EH	113.5	78.5	□90	26.5	45
	FA	103.5	68.5	□100	16.5	35
	FB	113.5	78.5	□100	26.5	45
EVL-070-□-□-19** (14< S≦19)	DA•DB•DC	--	--	--	--	--
	DD	--	--	--	--	--
	DE	--	--	--	--	--
	EA	--	--	--	--	--
	EB•ED	--	--	--	--	--
	EC	--	--	--	--	--
	FA	--	--	--	--	--
	FB	--	--	--	--	--

*1) Triple reduction : 1/15~ 1/100

*2) Bushing will be inserted to adapt to motor shaft

For an explanation on the Adapter Flange Code, please turn to page 422.

A more comprehensive adapter flange offering can be found using the NIDEC-SHIMPO Online Selector Tool. The variety is constantly expanding and being updated on the Selector Tool. If you have any questions or need any support, contact NIDEC-SHIMPO.

EVL-090 – 2-Stage Specifications

Frame Size	**090**									
Stage	**2-Stage**									
Ratio	Unit	Note	3	4	5	6	7	8	9	10
Nominal Output Torque	[Nm]	*1	45	60	65	65	65	65	45	45
Maximum Acceleration Torque	[Nm]	*2	65	90	90	90	90	90	65	65
Emergency Stop Torque	[Nm]	*3	130	170	220	220	220	220	170	170
Nominal Input Speed	[rpm]	*4	3000							
Maximum Input Speed	[rpm]	*5	6000							
No Load Running Torque	[Nm]	*6	1.13							
Permitted Radial Load	[N]	*7	810	890	960	1000	1100	1100	1200	1200
Permitted Axial Load	[N]	*8	930	1100	1200	1300	1300	1400	1500	1600
Maximum Radial Load	[N]	*9	2400							
Maximum Axial Load	[N]	*10	2200							
Moment of Inertia (≤ Ø 8)	[kgcm2]	--	--	--	--	--	--	--	--	--
Moment of Inertia (≤ Ø 14)	[kgcm2]	--	2.120	1.890	1.800	1.760	1.730	1.710	1.700	1.690
Moment of Inertia (≤ Ø 19)	[kgcm2]	--	2.450	2.220	2.130	2.090	2.060	2.040	2.030	2.020
Moment of Inertia (≤ Ø 28)	[kgcm2]	--	4.570	4.350	4.260	4.210	4.180	4.170	4.160	4.150
Efficiency	[%]	*11	93							
Torsional Rigidity	[Nm/arc-min]	*12	10							
Maximum Torsional Backlash	[arc-min]	--	≤ 6							
Noise Level	[dB]	*13	80							
Protection Class	--	*14	IP54 (IP65)							
Ambient Temperature	[°C]	--	0-40							
Permitted Housing Temperature	[°C]	--	90							
Weight	[kg]	*15	4.9							

EVL-090 – 3-Stage Specifications

Frame Size	**090**									
Stage	**3-Stage**									
Ratio	Unit	Note	15	16	20	25	28	30	35	40
Nominal Output Torque	[Nm]	*1	45	65	65	65	65	45	65	65
Maximum Acceleration Torque	[Nm]	*2	65	110	110	110	110	65	110	110
Emergency Stop Torque	[Nm]	*3	170	220	220	220	220	170	220	220
Nominal Input Speed	[rpm]	*4	3000							
Maximum Input Speed	[rpm]	*5	6000							
No Load Running Torque	[Nm]	*6	0.55							
Permitted Radial Load	[N]	*7	1400	1400	1500	1600	1700	1700	1800	1900
Permitted Axial Load	[N]	*8	1900	1900	2100	2200	2200	2200	2200	2200
Maximum Radial Load	[N]	*9	2400							
Maximum Axial Load	[N]	*10	2200							
Moment of Inertia (≤ Ø 8)	[kgcm2]	--	0.340	0.380	0.330	0.320	0.370	0.250	0.320	0.250
Moment of Inertia (≤ Ø 14)	[kgcm2]	--	0.410	0.460	0.400	0.400	0.450	0.330	0.400	0.320
Moment of Inertia (≤ Ø 19)	[kgcm2]	--	0.600	0.650	0.590	0.590	0.640	0.510	0.590	0.510
Moment of Inertia (≤ Ø 28)	[kgcm2]	--	--	--	--	--	--	--	--	--
Efficiency	[%]	*11	88							
Torsional Rigidity	[Nm/arc-min]	*12	10							
Maximum Torsional Backlash	[arc-min]	--	≤ 9							
Noise Level	[dB]	*13	80							
Protection Class	--	*14	IP54 (IP65)							
Ambient Temperature	[°C]	--	0-40							
Permitted Housing Temperature	[°C]	--	90							
Weight	[kg]	*15	4.3							

EVL-090 – 3-Stage Specifications

Frame Size	**090**								
Stage	**3-Stage**								
Ratio	Unit	Note	45	50	60	70	80	90	100
Nominal Output Torque	[Nm]	*1	45	65	65	65	65	45	45
Maximum Acceleration Torque	[Nm]	*2	65	110	1110	110	110	65	65
Emergency Stop Torque	[Nm]	*3	170	220	220	220	220	170	170
Nominal Input Speed	[rpm]	*4	3000						
Maximum Input Speed	[rpm]	*5	6000						
No Load Running Torque	[Nm]	*6	0.55						
Permitted Radial Load	[N]	*7	2000	2100	2200	2300	2400	2400	2400
Permitted Axial Load	[N]	*8	2200	2200	2200	2200	2200	2200	2200
Maximum Radial Load	[N]	*9	2400						
Maximum Axial Load	[N]	*10	2200						
Moment of Inertia (≤ Ø 8)	[kgcm2]	--	0.320	0.250	0.250	0.250	0.250	0.250	0.250
Moment of Inertia (≤ Ø 14)	[kgcm2]	--	0.390	0.320	0.320	0.320	0.320	0.320	0.320
Moment of Inertia (≤ Ø 19)	[kgcm2]	--	0.580	0.510	0.510	0.510	0.510	0.510	0.510
Moment of Inertia (≤ Ø 28)	[kgcm2]	--	--	--	--	--	--	--	--
Efficiency	[%]	*11	88						
Torsional Rigidity	[Nm/arc-min]	*12	10						
Maximum Torsional Backlash	[arc-min]	--	≤ 9						
Noise Level	[dB]	*13	80						
Protection Class	--	*14	IP54 (IP65)						
Ambient Temperature	[°C]	--	0-40						
Permitted Housing Temperature	[°C]	--	90						
Weight	[kg]	*15	4.3						

*1) At nominal input speed, service life is 20,000 hours
*2) The maximum torque when starting or stopping operation
*3) The maximum torque allowed under a stress situation (Permitted 1,000 times during service life)
*4) The average input speed
*5) The maximum intermittent input speed
*6) This is the torque at no load applied on the input shaft. The input speed is 3000 rpm for EVL090
*7) At this load and nominal input speed, service life will be 20,000 hours. (The radial load applied to the output side bearing)
*8) At this load and nominal input speed, service life will be 20,000 hours. (The axial load applied to the output shaft center)
*9) The maximum radial load that the reducer can accept
*10) The maximum axial load that the reducer can accept
*11) The efficiency at the nominal torque rating
*12) This does not include the lost motion
*13) Contact NIDEC-SHIMPO for the testing conditions and environment
*14) IP65 (wash-down) is available as an option. Contact NIDEC-SHIMPO for more details and our food grade options
*15) The weight may vary slightly between models

EVL-090 – 2-Stage Dimensions

Input shaft bore ≦φ14

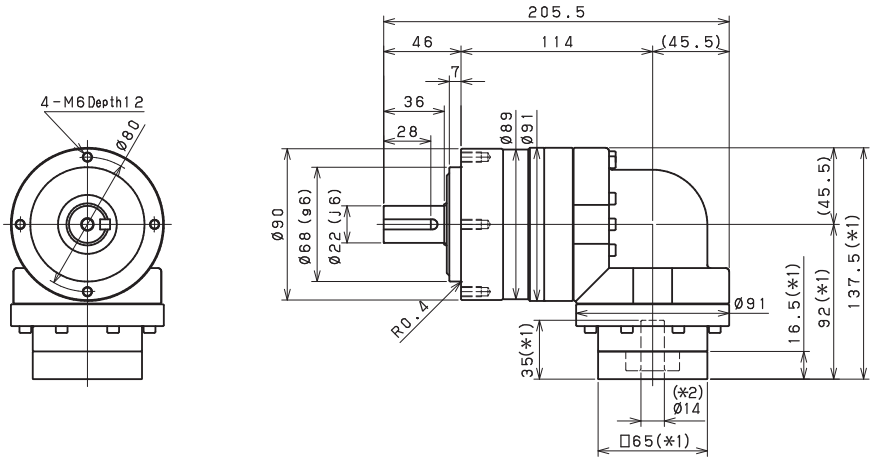

Input shaft bore ≦φ19

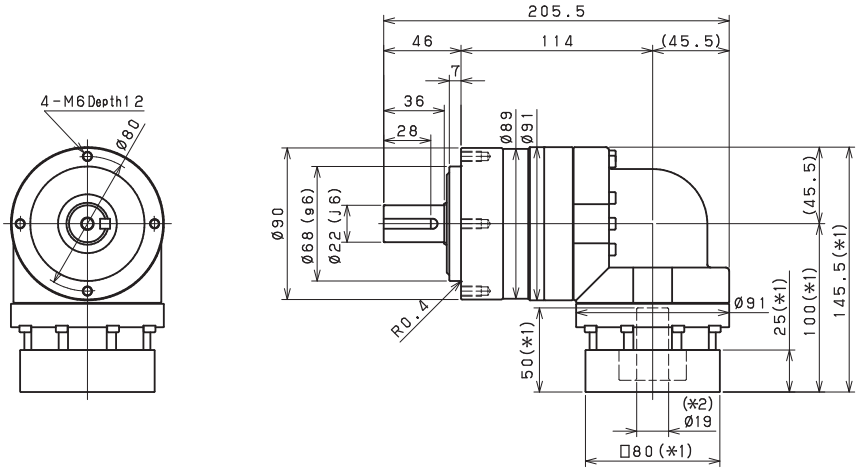

Input shaft bore ≦φ28

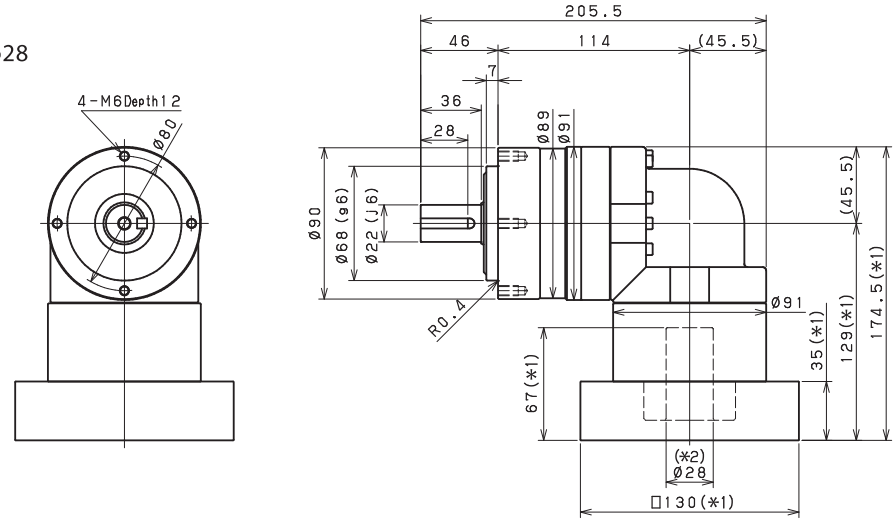

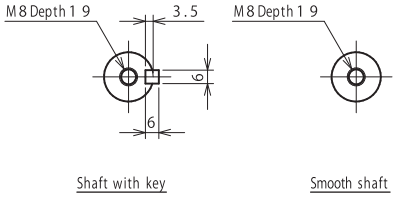

Shaft with key　　Smooth shaft

*1) Length will vary depending on motor.

*2) Bushing will be inserted to adapt to motor shaft

EVL-090 – 3-Stage Dimensions

Input shaft bore ≦φ8

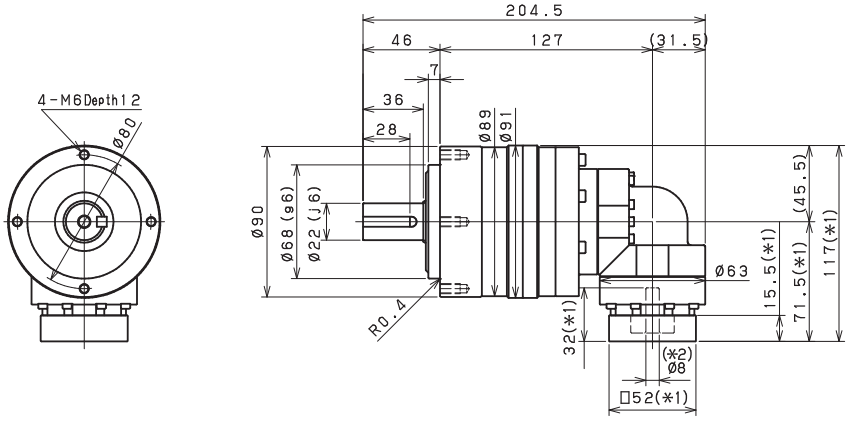

Input shaft bore ≦φ14

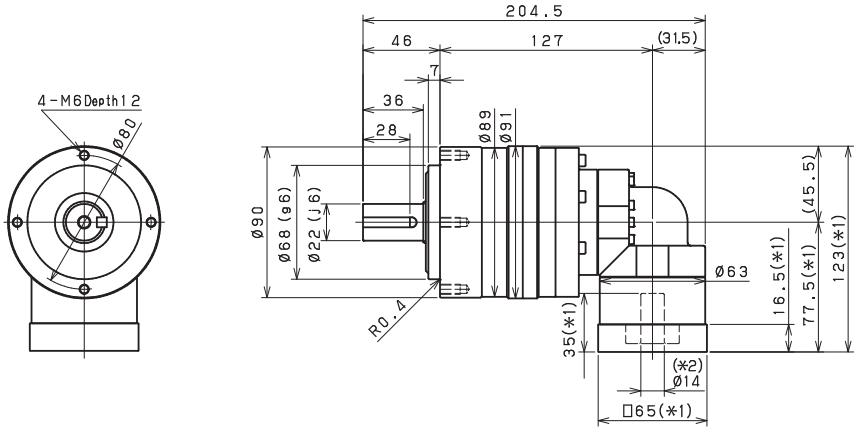

Input shaft bore ≦φ19

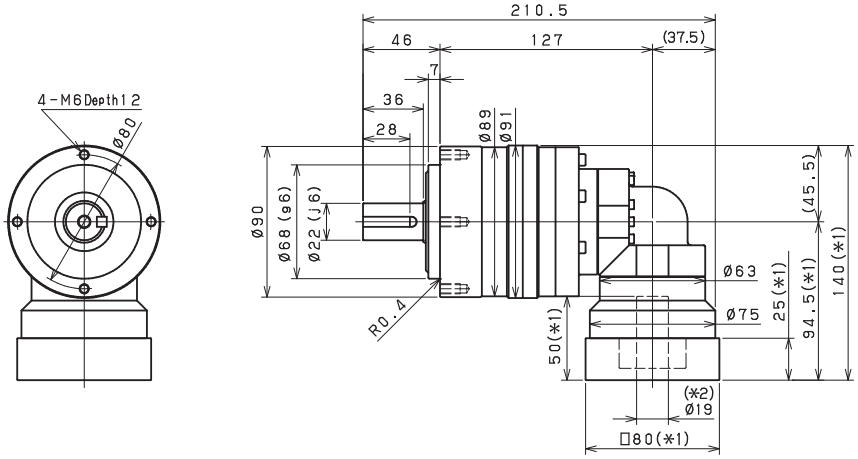

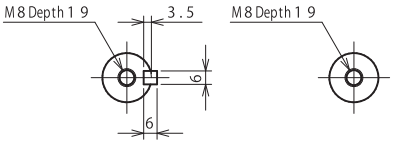

Shaft with key　　Smooth shaft

*1) Length will vary depending on motor.

*2) Bushing will be inserted to adapt to motor shaft

EVL-090 – 2-Stage Adapter Dimensions

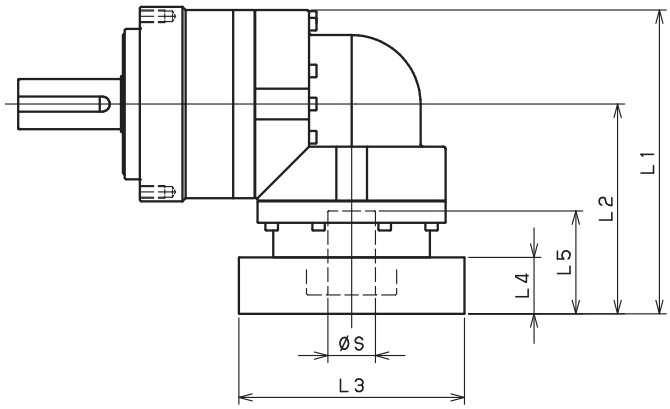

Model number	**: Adapter code	2-Stage				
		L1	L2	L3	L4	L5
EVL-090-□-□-8** (S≦ 8)	AA•AC•AD•AF•AG•AL•AM•AN•AQ	--	--	--	--	--
	AB•AE•AH•AJ•AK	--	--	--	--	--
	BA•BB•BD•BE•BG•BH•BJ	--	--	--	--	--
	CA	--	--	--	--	--
EVL-090-□-□-14** (8< S≦14)	BA•BB•BD•BE•BF•BG•BH•BJ•BK•BP	137.5	92	□65	16.5	35
	BC•BH•BM•BN	142.5	97	□65	21.5	40
	CA•CC	137.5	92	□70	16.5	35
	DA•DB•DC•DD•DF•DH•DJ	137.5	92	□80	16.5	35
	EA•EB•EC•EF•EG•EK•EL	137.5	92	□90	16.5	35
	FA	137.5	92	□100	16.5	35
	FB	147.5	102	□100	26.5	45
	JA	152.5	107	□150	31.5	50
EVL-090-□-□-19** (14< S≦19)	DA•DB•DC	145.5	100	□80	25	50
	EB•ED	145.5	100	□90	25	50
	FA	145.5	100	□100	25	50
	FB	155.5	110	□100	35	60
	GA•GC•GH	150.5	105	□115	30	55
	GB•GD•GJ	145.5	100	□115	25	50
	GE•GF	155.5	110	□115	35	60
	HA	145.5	100	□130	25	50
	HB	160.5	115	□130	40	65
	HC•HD•HE	150.5	105	□130	30	55
	JA	155.5	110	□150	35	60
	JB	160.5	115	□150	40	65
EVL-090-□-□-28** (19< S≦ 28)	FA•FB•FC	174.5	129	□100	35	67
	FD•FE	169.5	124	□100	30	62
	GA•GB•GC•GD•GE•GF•GG•GH	174.5	129	□115	35	67
	HA•HC•HD	174.5	129	□130	35	67
	HB	184.5	139	□130	45	77
	HE	189.5	144	□130	50	82
	HF	169.5	124	□130	30	62
	JA•JB•JC•JF	174.5	129	□150	35	67
	JD	194.5	149	□150	55	87
	JE	184.5	139	□150	45	77

*1) Double reduction : 1/3~ 1/10 *2) Bushing will be inserted to adapt to motor shaft

For an explanation on the Adapter Flange Code, please turn to page 422.

A more comprehensive adapter flange offering can be found using the NIDEC-SHIMPO Online Selector Tool. The variety is constantly expanding and being updated on the Selector Tool. If you have any questions or need any support, contact NIDEC-SHIMPO.

EVL-090 – 3-Stage Adapter Dimensions

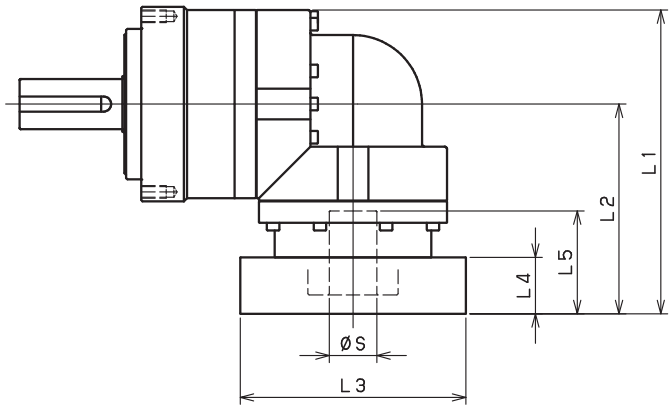

Model number	**: Adapter code	3-Stage				
		L1	L2	L3	L4	L5
EVL-090-□-□-8** (S≦ 8)	AA•AC•AD•AF•AG•AL•AM•AN•AQ	117	71.5	□52	15.5	32
	AB•AE•AH•AJ•AK	122	76.5	□52	20.5	37
	BA•BB•BD•BE•BG•BH•BJ	117	71.5	□60	15.5	32
	CA	122	76.5	□70	20.5	37
EVL-090-□-□-14** (8< S≦14)	BA•BB•BD•BE•BF•BG•BH•BJ•BK•BP	123	77.5	□65	16.5	35
	BC•BH•BM•BN	128	82.5	□65	21.5	40
	CA•CC	123	77.5	□70	16.5	35
	DA•DB•DC•DD•DF•DH•DJ	123	77.5	□80	16.5	35
	EA•EB•EC•EF•EG•EK•EL	123	77.5	□90	16.5	35
	FA	123	77.5	□100	16.5	35
	FB	133	87.5	□100	26.5	45
	JA	138	92.5	□150	31.5	50
EVL-090-□-□-19** (14< S≦19)	DA•DB•DC	140	94.5	□80	25	50
	EB•ED	140	94.5	□90	25	50
	FA	140	94.5	□100	25	50
	FB	150	104.5	□100	35	60
	GA•GC•GH	145	99.5	□115	30	55
	GB•GD•GJ	140	94.5	□115	25	50
	GE•GF	150	104.5	□115	35	60
	HA	140	94.5	□130	25	50
	HB	155	109.5	□130	40	65
	HC•HD•HE	145	99.5	□130	30	55
	JA	150	104.5	□150	35	60
	JB	155	109.5	□150	40	65
EVL-090-□-□-28** (19< S≦ 28)	FA•FB•FC	--	--	--	--	--
	FD•FE	--	--	--	--	--
	GA•GB•GC•GD•GE•GF•GG•GH	--	--	--	--	--
	HA•HC•HD	--	--	--	--	--
	HB	--	--	--	--	--
	HE	--	--	--	--	--
	HF	--	--	--	--	--
	JA•JB•JC•JF	--	--	--	--	--
	JD	--	--	--	--	--
	JE	--	--	--	--	--

*1) Triple reduction : 1/15~ 1/100 *2) Bushing will be inserted to adapt to motor shaft

For an explanation on the Adapter Flange Code, please turn to page 422.

A more comprehensive adapter flange offering can be found using the NIDEC-SHIMPO Online Selector Tool. The variety is constantly expanding and being updated on the Selector Tool. If you have any questions or need any support, contact NIDEC-SHIMPO.

EVL-120 – 2-Stage Specifications

Frame Size	**120**									
Stage	**2-Stage**									
Ratio	Unit	Note	3	4	5	6	7	8	9	10
Nominal Output Torque	[Nm]	*1	75	100	120	150	150	150	110	110
Maximum Acceleration Torque	[Nm]	*2	150	200	240	300	300	300	200	200
Emergency Stop Torque	[Nm]	*3	320	430	500	550	550	550	450	450
Nominal Input Speed	[rpm]	*4	3000							
Maximum Input Speed	[rpm]	*5	6000							
No Load Running Torque	[Nm]	*6	1.88							
Permitted Radial Load	[N]	*7	1300	1500	1600	1700	1800	1900	1900	2000
Permitted Axial Load	[N]	*8	1500	1700	1900	2000	2100	2300	2400	2500
Maximum Radial Load	[N]	*9	4300							
Maximum Axial Load	[N]	*10	3900							
Moment of Inertia (≤ Ø 14)	[kgcm2]	--	--	--	--	--	--	--	--	--
Moment of Inertia (≤ Ø 19)	[kgcm2]	--	6.740	5.490	5.020	4.770	4.650	4.550	4.490	4.460
Moment of Inertia (≤ Ø 28)	[kgcm2]	--	8.340	7.080	6.610	6.360	6.240	6.140	6.080	6.050
Moment of Inertia (≤ Ø 38)	[kgcm2]	--	15.410	14.150	13.690	13.430	13.310	13.220	13.160	13.120
Efficiency	[%]	*11	93							
Torsional Rigidity	[Nm/arc-min]	*12	31							
Maximum Torsional Backlash	[arc-min]	--	≤ 6							
Noise Level	[dB]	*13	85							
Protection Class	--	*14	IP54 (IP65)							
Ambient Temperature	[°C]	--	0-40							
Permitted Housing Temperature	[°C]	--	90							
Weight	[kg]	*15	10.2							

EVL-120 – 3-Stage Specifications

Frame Size	**120**									
Stage	**3-Stage**									
Ratio	Unit	Note	15	16	20	25	28	30	35	40
Nominal Output Torque	[Nm]	*1	110	130	150	150	150	110	150	150
Maximum Acceleration Torque	[Nm]	*2	200	260	300	300	300	200	300	300
Emergency Stop Torque	[Nm]	*3	450	550	550	550	550	450	550	550
Nominal Input Speed	[rpm]	*4	3000							
Maximum Input Speed	[rpm]	*5	6000							
No Load Running Torque	[Nm]	*6	1.11							
Permitted Radial Load	[N]	*7	2300	2300	2500	2700	2800	2900	3000	3200
Permitted Axial Load	[N]	*8	3000	3100	3400	3700	3900	3900	3900	3900
Maximum Radial Load	[N]	*9	4300							
Maximum Axial Load	[N]	*10	3900							
Moment of Inertia (≤ Ø 14)	[kgcm2]	--	2.250	2.460	2.200	2.180	2.400	1.870	2.160	1.860
Moment of Inertia (≤ Ø 19)	[kgcm2]	--	2.580	2.790	2.530	2.510	2.730	2.200	2.490	2.190
Moment of Inertia (≤ Ø 28)	[kgcm2]	--	4.700	4.910	4.650	4.640	4.860	4.330	4.620	4.320
Moment of Inertia (≤ Ø 38)	[kgcm2]	--	--	--	--	--	--	--	--	--
Efficiency	[%]	*11	88							
Torsional Rigidity	[Nm/arc-min]	*12	31							
Maximum Torsional Backlash	[arc-min]	--	≤ 9							
Noise Level	[dB]	*13	85							
Protection Class	--	*14	IP54 (IP65)							
Ambient Temperature	[°C]	--	0-40							
Permitted Housing Temperature	[°C]	--	90							
Weight	[kg]	*15	10							

EVL-120 – 3-Stage Specifications

Frame Size	**120**								
Stage	**3-Stage**								
Ratio	Unit	Note	45	50	60	70	80	90	100
Nominal Output Torque	[Nm]	*1	110	150	150	150	150	110	110
Maximum Acceleration Torque	[Nm]	*2	200	300	300	300	300	200	200
Emergency Stop Torque	[Nm]	*3	450	550	550	550	550	450	450
Nominal Input Speed	[rpm]	*4	3000						
Maximum Input Speed	[rpm]	*5	6000						
No Load Running Torque	[Nm]	*6	1.11						
Permitted Radial Load	[N]	*7	3300	3400	3600	3800	4000	4200	4300
Permitted Axial Load	[N]	*8	3900	3900	3900	3900	3900	3900	3900
Maximum Radial Load	[N]	*9	4300						
Maximum Axial Load	[N]	*10	3900						
Moment of Inertia (≤ Ø 14)	[kgcm2]	--	2.150	1.860	1.850	1.850	1.850	1.850	1.850
Moment of Inertia (≤ Ø 19)	[kgcm2]	--	2.480	2.190	2.180	2.180	2.180	2.180	2.180
Moment of Inertia (≤ Ø 28)	[kgcm2]	--	4.610	4.310	4.310	4.310	4.310	4.310	4.310
Moment of Inertia (≤ Ø 38)	[kgcm2]	--	--	--	--	--	--	--	--
Efficiency	[%]	*11	88						
Torsional Rigidity	[Nm/arc-min]	*12	31						
Maximum Torsional Backlash	[arc-min]	--	≤ 9						
Noise Level	[dB]	*13	85						
Protection Class	--	*14	IP54 (IP65)						
Ambient Temperature	[°C]	--	0-40						
Permitted Housing Temperature	[°C]	--	90						
Weight	[kg]	*15	10						

*1) At nominal input speed, service life is 20,000 hours
*2) The maximum torque when starting or stopping operation
*3) The maximum torque allowed under a stress situation (Permitted 1,000 times during service life)
*4) The average input speed
*5) The maximum intermittent input speed
*6) This is the torque at no load applied on the input shaft. The input speed is 3000 rpm for EVL120
*7) At this load and nominal input speed, service life will be 20,000 hours. (The radial load applied to the output side bearing)
*8) At this load and nominal input speed, service life will be 20,000 hours. (The axial load applied to the output shaft center)
*9) The maximum radial load that the reducer can accept
*10) The maximum axial load that the reducer can accept
*11) The efficiency at the nominal torque rating
*12) This does not include the lost motion
*13) Contact NIDEC-SHIMPO for the testing conditions and environment
*14) IP65 (wash-down) is available as an option. Contact NIDEC-SHIMPO for more details and our food grade options
*15) The weight may vary slightly between models

EVL-120 – 2-Stage Dimensions

Input shaft bore ≦φ19

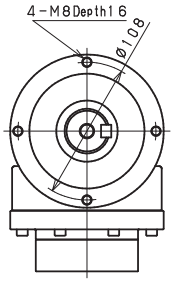

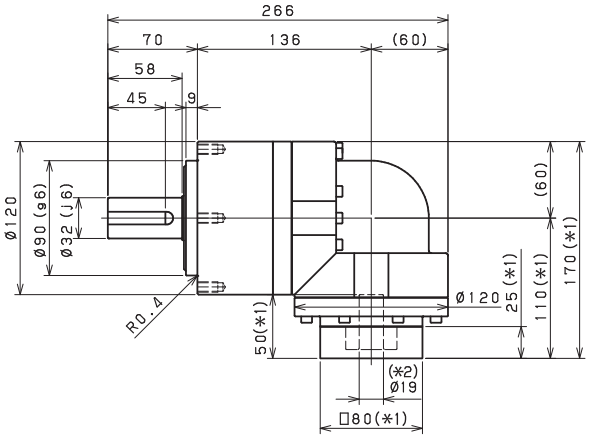

Input shaft bore ≦φ28

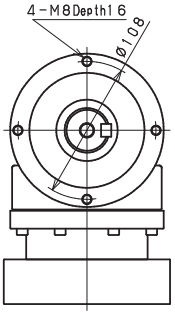

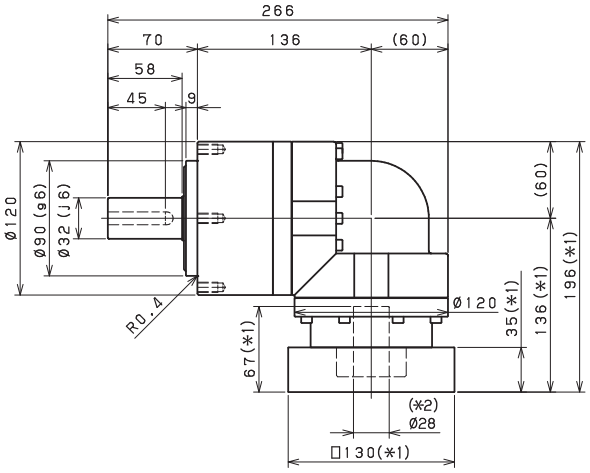

Input shaft bore ≦φ38

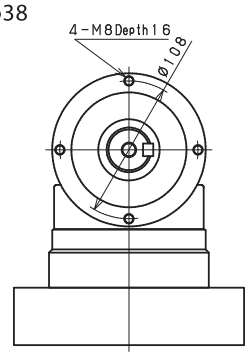

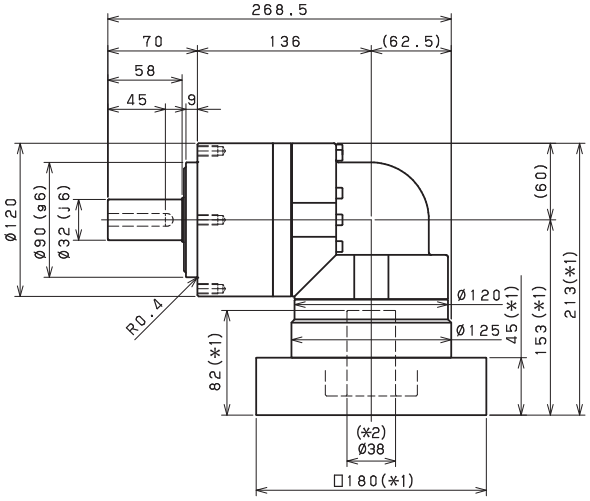

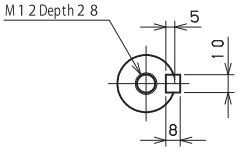

Shaft with key

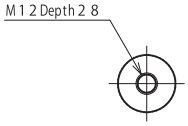

Smooth shaft

*1) Length will vary depending on motor

*2) Bushing will be inserted to adapt to motor shaft

EVL-120 – 3-Stage Dimensions

Input shaft bore ≦φ14

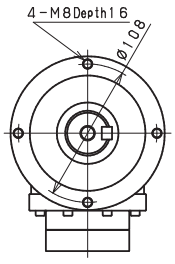

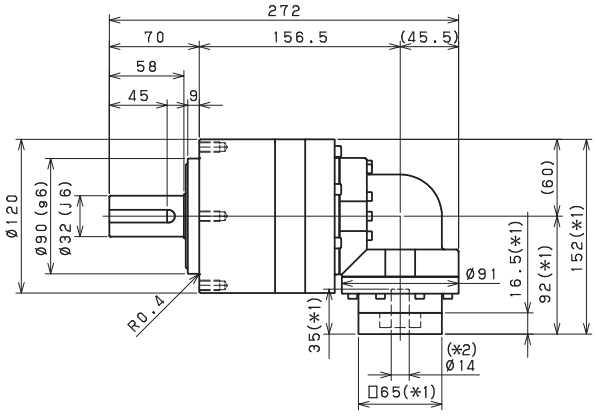

Input shaft bore ≦φ19

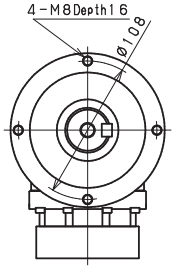

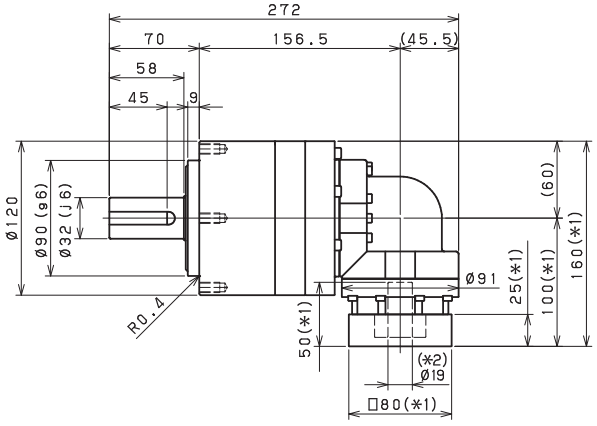

Input shaft bore ≦φ28

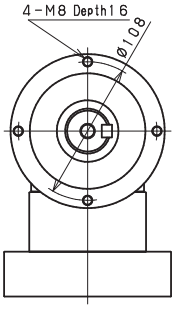

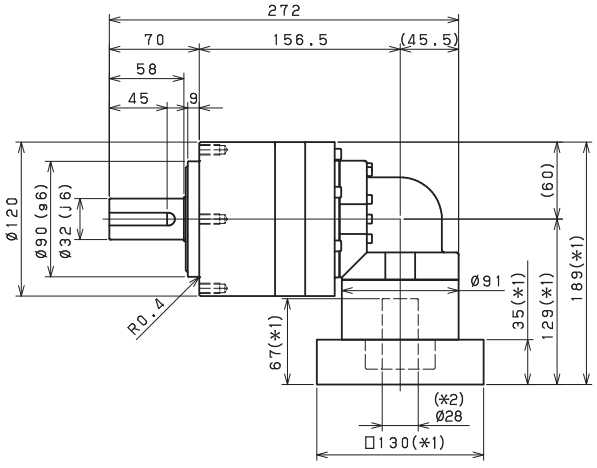

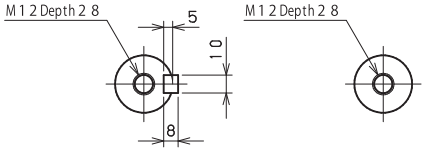

Shaft with key　　Smooth shaft

*1) Length will vary depending on motor

*2) Bushing will be inserted to adapt to motor shaft

EVL

EVL-120 – 2-Stage Adapter Dimensions

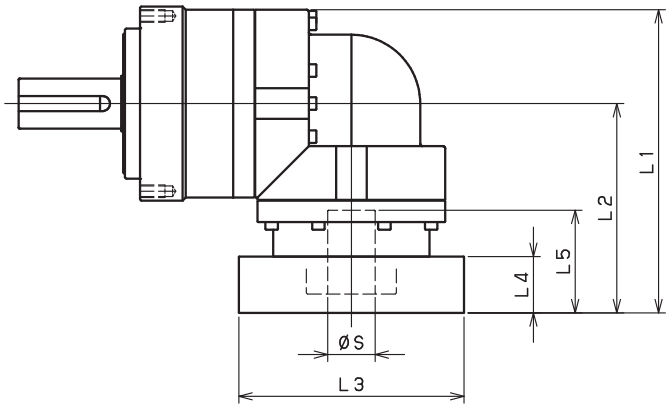

Model number	**: Adapter code	2-Stage				
		L1	L2	L3	L4	L5
EVL-120-□-□-14** (S≦ 14)	BA•BB•BD•BE•BF•BG•BH•BJ•BK•BP	--	--	--	--	--
	BC•BH•BM•BN	--	--	--	--	--
	CA•CC	--	--	--	--	--
	DA•DB•DC•DD•DF•DH•DJ	--	--	--	--	--
	EA•EB•EC•EF•EG•EK•EL	--	--	--	--	--
	FA	--	--	--	--	--
	FB	--	--	--	--	--
	JA	--	--	--	--	--
EVL-120-□-□-19** (14< S≦ 19)	DA•DB•DC	170	110	□80	25	50
	EB•ED	170	110	□90	25	50
	FA	170	110	□100	25	50
	FB	180	120	□100	35	60
	GB•GD•GJ	170	110	□115	25	50
	HA	170	110	□130	25	50
	HB	185	125	□130	40	65
	JA	180	120	□150	35	60
EVL-120-□-□-28** (19< S≦ 28)	FA•FB•FC	196	136	□100	35	67
	FD•FE	191	131	□100	30	62
	GA•GB•GC•GD•GE•GF•GG•GH	196	136	□115	35	67
	HA•HC•HD	196	136	□130	35	67
	HB	206	146	□130	45	77
	HE	211	151	□130	50	82
	HF	191	131	□130	30	62
	JA•JB•JC•JF	196	136	□150	35	67
	JD	216	156	□150	55	87
	JE	206	146	□150	45	77
	KA•KB•KE	196	136	□180	35	67
	KD	206	146	□180	45	77
EVL-120-□-□-38** (28< S≦ 38)	HA	213	153	□130	45	82
	HB•HE	208	148	□130	40	77
	JA	213	153	□150	45	82
	KA•KB•KC	213	153	□180	45	82
	KD	248	188	□180	80	117
	KE	228	168	□180	60	97

*1) Double reduction : 1/3~ 1/10 *2) Bushing will be inserted to adapt to motor shaft

For an explanation on the Adapter Flange Code, please turn to page 422.

A more comprehensive adapter flange offering can be found using the NIDEC-SHIMPO Online Selector Tool. The variety is constantly expanding and being updated on the Selector Tool. If you have any questions or need any support, contact NIDEC-SHIMPO.

EVL-120 – 3-Stage Adapter Dimensions

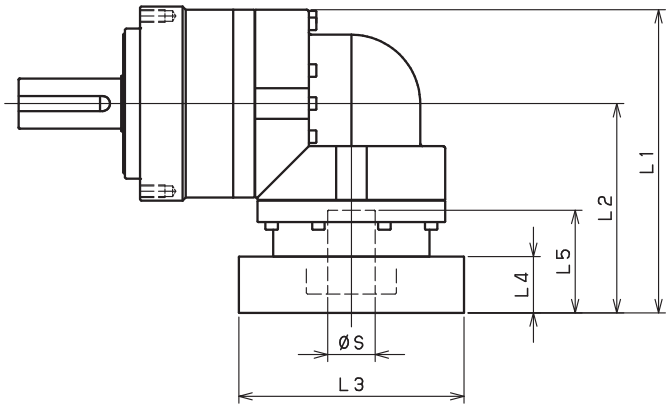

Model number	**: Adapter code	3-Stage				
		L1	L2	L3	L4	L5
EVL-120-□-□-14** (S≦ 14)	BA•BB•BD•BE•BF•BG•BH•BJ•BK•BP	152	92	□65	16.5	35
	BC•BH•BM•BN	157	97	□65	21.5	40
	CA•CC	152	92	□70	16.5	35
	DA•DB•DC•DD•DF•DH•DJ	152	92	□80	16.5	35
	EA•EB•EC•EF•EG•EK•EL	152	92	□90	16.5	35
	FA	152	92	□100	16.5	35
	FB	162	102	□100	26.5	45
	JA	167	107	□150	31.5	50
EVL-120-□-□-19** (14< S≦ 19)	DA•DB•DC	160	100	□80	25	50
	EB•ED	160	100	□90	25	50
	FA	160	100	□100	25	50
	FB	170	110	□100	35	60
	GB•GD•GJ	160	100	□115	25	50
	HA	160	100	□130	25	50
	HB	175	115	□130	40	65
	JA	170	110	□150	35	60
EVL-120-□-□-28** (19< S≦ 28)	FA•FB•FC	189	129	□100	35	67
	FD•FE	184	124	□100	30	62
	GA•GB•GC•GD•GE•GF•GG•GH	189	129	□115	35	67
	HA•HC•HD	189	129	□130	35	67
	HB	199	139	□130	45	77
	HE	204	144	□130	50	82
	HF	184	124	□130	30	62
	JA•JB•JC•JF	189	129	□150	35	67
	JD	209	149	□150	55	87
	JE	199	139	□150	45	77
	KA•KB•KE	189	129	□180	35	67
	KD	199	139	□180	45	77
EVL-120-□-□-38** (28< S≦ 38)	HA	--	--	--	--	--
	HB•HE	--	--	--	--	--
	JA	--	--	--	--	--
	KA•KB•KC	--	--	--	--	--
	KD	--	--	--	--	--
	KE	--	--	--	--	--

*1) Triple reduction : 1/15~ 1/100 *2) Bushing will be inserted to adapt to motor shaft

For an explanation on the Adapter Flange Code, please turn to page 422.

A more comprehensive adapter flange offering can be found using the NIDEC-SHIMPO Online Selector Tool. The variety is constantly expanding and being updated on the Selector Tool. If you have any questions or need any support, contact NIDEC-SHIMPO.

EVL-155 – 2-Stage Specifications

Frame Size	**155**									
Stage	**2-Stage**									
Ratio	Unit	Note	3	4	5	6	7	8	9	10
Nominal Output Torque	[Nm]	*1	130	170	200	260	300	300	200	200
Maximum Acceleration Torque	[Nm]	*2	260	340	400	520	600	600	400	400
Emergency Stop Torque	[Nm]	*3	700	950	1100	1100	1100	1100	750	750
Nominal Input Speed	[rpm]	*4	2000							
Maximum Input Speed	[rpm]	*5	4000							
No Load Running Torque	[Nm]	*6	3.26							
Permitted Radial Load	[N]	*7	3200	3500	3800	4000	4200	4400	4600	4700
Permitted Axial Load	[N]	*8	2400	2700	3000	3300	3500	3700	3900	4100
Maximum Radial Load	[N]	*9	9100							
Maximum Axial Load	[N]	*10	8200							
Moment of Inertia (≤ Ø 19)	[kgcm2]	--	--	--	--	--	--	--	--	--
Moment of Inertia (≤ Ø 28)	[kgcm2]	--	23.130	18.570	16.910	16.010	15.580	15.230	14.770	14.660
Moment of Inertia (≤ Ø 38)	[kgcm2]	--	27.500	22.940	21.280	20.380	19.950	19.610	19.410	19.030
Moment of Inertia (≤ Ø 48)	[kgcm2]	--	40.730	36.170	34.510	33.610	33.180	32.840	32.370	32.260
Efficiency	[%]	*11	93							
Torsional Rigidity	[Nm/arc-min]	*12	60							
Maximum Torsional Backlash	[arc-min]	--	≤ 6							
Noise Level	[dB]	*13	85							
Protection Class	--	*14	IP54 (IP65)							
Ambient Temperature	[°C]	--	0-40							
Permitted Housing Temperature	[°C]	--	90							
Weight	[kg]	*15	19.8							

EVL-155 – 3-Stage Specifications

Frame Size	**155**									
Stage	**3-Stage**									
Ratio	Unit	Note	15	16	20	25	28	30	35	40
Nominal Output Torque	[Nm]	*1	200	300	300	300	300	200	300	300
Maximum Acceleration Torque	[Nm]	*2	400	600	600	600	600	400	600	600
Emergency Stop Torque	[Nm]	*3	750	1100	1100	1100	1100	750	1100	1100
Nominal Input Speed	[rpm]	*4	2000							
Maximum Input Speed	[rpm]	*5	4000							
No Load Running Torque	[Nm]	*6	2.56							
Permitted Radial Load	[N]	*7	5400	5500	6000	6400	6700	6800	7200	7500
Permitted Axial Load	[N]	*8	4900	5000	5500	6100	6400	6600	7000	7500
Maximum Radial Load	[N]	*9	9100							
Maximum Axial Load	[N]	*10	8200							
Moment of Inertia (≤ Ø 19)	[kgcm2]	--	6.400	7.290	6.220	6.150	7.090	4.990	6.090	4.950
Moment of Inertia (≤ Ø 28)	[kgcm2]	--	8.000	8.880	7.810	7.750	8.680	6.580	7.690	6.540
Moment of Inertia (≤ Ø 38)	[kgcm2]	--	15.070	15.960	14.890	14.820	15.760	13.660	14.760	13.610
Moment of Inertia (≤ Ø 48)	[kgcm2]	--	--	--	--	--	--	--	--	--
Efficiency	[%]	*11	88							
Torsional Rigidity	[Nm/arc-min]	*12	60							
Maximum Torsional Backlash	[arc-min]	--	≤ 9							
Noise Level	[dB]	*13	85							
Protection Class	--	*14	IP54 (IP65)							
Ambient Temperature	[°C]	--	0-40							
Permitted Housing Temperature	[°C]	--	90							
Weight	[kg]	*15	20.4							

EVL-155 – 3-Stage Specifications

Frame Size	155								
Stage	**3-Stage**								
Ratio	Unit	Note	45	50	60	70	80	90	100
Nominal Output Torque	[Nm]	*1	200	300	300	300	300	200	200
Maximum Acceleration Torque	[Nm]	*2	400	600	600	600	600	400	400
Emergency Stop Torque	[Nm]	*3	750	1100	1100	1100	1100	750	750
Nominal Input Speed	[rpm]	*4	2000						
Maximum Input Speed	[rpm]	*5	4000						
No Load Running Torque	[Nm]	*6	2.56						
Permitted Radial Load	[N]	*7	7800	8100	8600	9100	9100	9100	9100
Permitted Axial Load	[N]	*8	7900	8200	8200	8200	8200	8200	8200
Maximum Radial Load	[N]	*9	9100						
Maximum Axial Load	[N]	*10	8200						
Moment of Inertia (≤ Ø 19)	[kgcm2]	--	6.070	4.930	4.920	4.910	4.910	4.910	4.910
Moment of Inertia (≤ Ø 28)	[kgcm2]	--	7.660	6.520	6.510	6.510	6.500	6.500	6.500
Moment of Inertia (≤ Ø 38)	[kgcm2]	--	14.740	13.590	13.590	13.580	13.580	13.570	13.570
Moment of Inertia (≤ Ø 48)	[kgcm2]	--	--	--	--	--	--	--	--
Efficiency	[%]	*11	88						
Torsional Rigidity	[Nm/arc-min]	*12	60						
Maximum Torsional Backlash	[arc-min]	--	≤ 9						
Noise Level	[dB]	*13	85						
Protection Class	--	*14	IP54 (IP65)						
Ambient Temperature	[°C]	--	0-40						
Permitted Housing Temperature	[°C]	--	90						
Weight	[kg]	*15	20.4						

*1) At nominal input speed, service life is 20,000 hours
*2) The maximum torque when starting or stopping operation
*3) The maximum torque allowed under a stress situation (Permitted 1,000 times during service life)
*4) The average input speed
*5) The maximum intermittent input speed
*6) This is the torque at no load applied on the input shaft. The input speed is 2000 rpm for EVL155
*7) At this load and nominal input speed, service life will be 20,000 hours. (The radial load applied to the output side bearing)
*8) At this load and nominal input speed, service life will be 20,000 hours. (The axial load applied to the output shaft center)
*9) The maximum radial load that the reducer can accept
*10) The maximum axial load that the reducer can accept
*11) The efficiency at the nominal torque rating
*12) This does not include the lost motion
*13) Contact NIDEC-SHIMPO for the testing conditions and environment
*14) IP65 (wash-down) is available as an option. Contact NIDEC-SHIMPO for more details and our food grade options
*15) The weight may vary slightly between models

EVL-155 – 2-Stage Dimensions

Input shaft bore ≦φ28

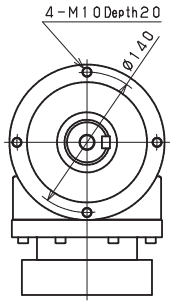

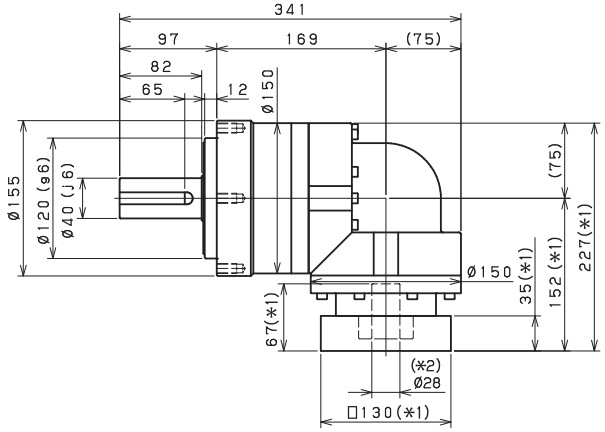

Input shaft bore ≦φ38

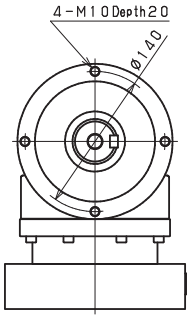

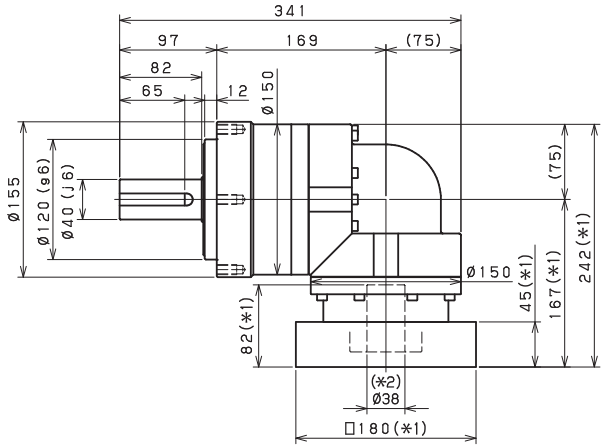

Input shaft bore ≦φ48

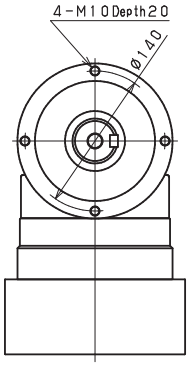

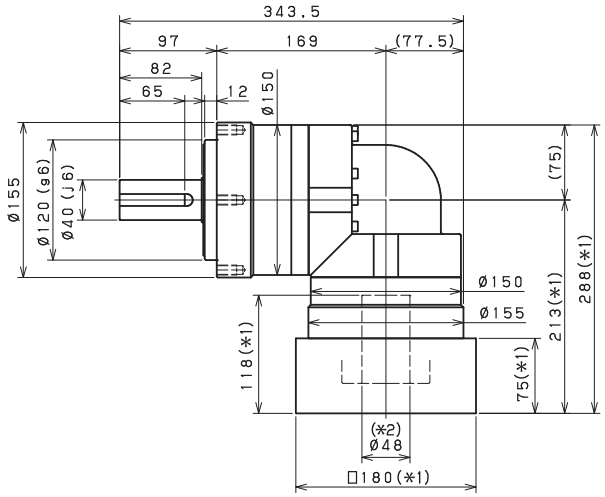

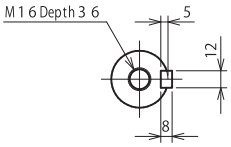

Shaft with key

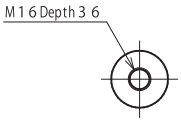

Smooth shaft

*1) Length will vary depending on motor.

*2) Bushing will be inserted to adapt to motor shaft

EVL-155 – 3-Stage Dimensions

Input shaft bore ≦φ19

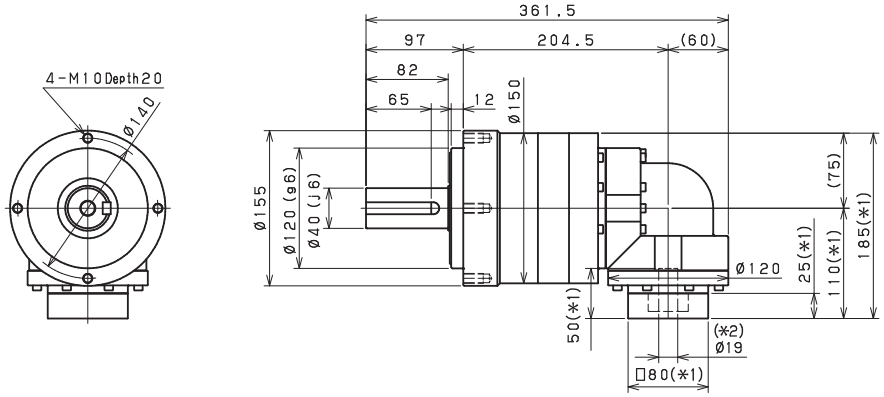

Input shaft bore ≦φ28

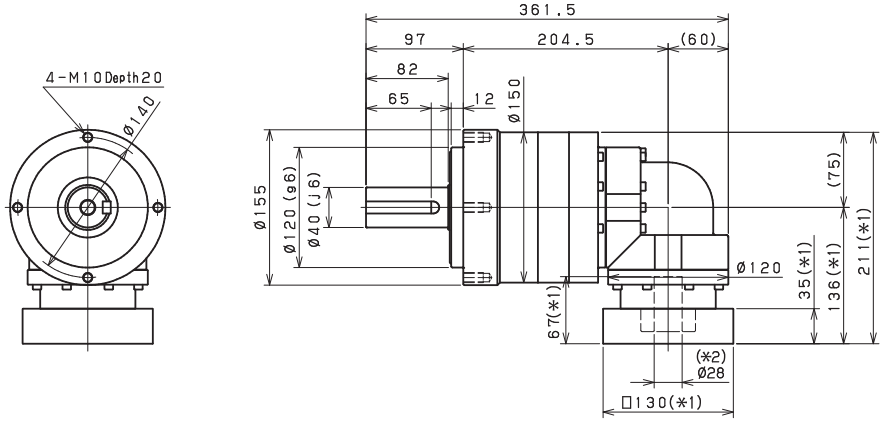

Input shaft bore ≦φ38

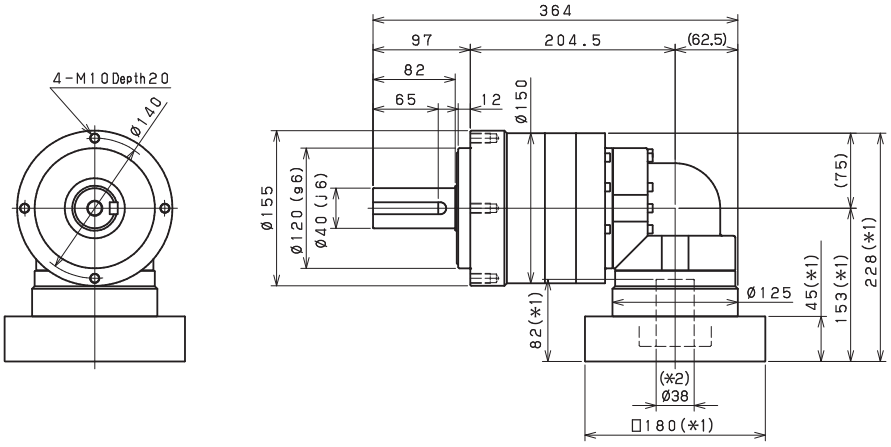

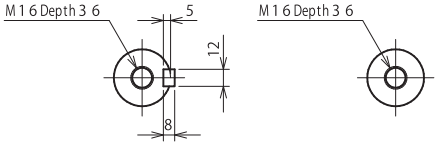

Shaft with key　　Smooth shaft

*1) Length will vary depending on motor.

*2) Bushing will be inserted to adapt to motor shaft

EVL

EVL-155 – 2-Stage Adapter Dimensions

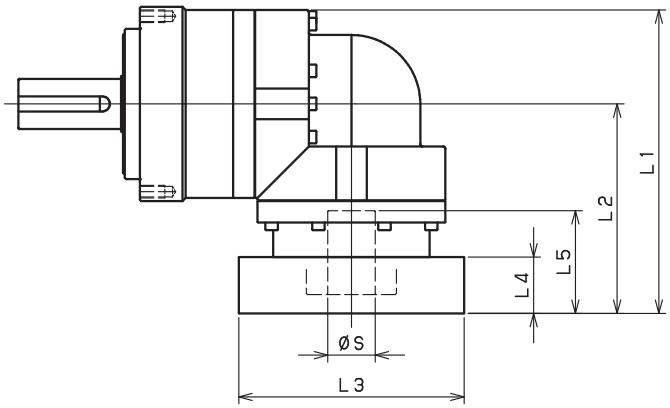

Model number	**: Adapter code	2-Stage				
		L1	L2	L3	L4	L5
EVL-155-□-□-19** (S≦19)	DA•DB•DC	--	--	--	--	--
	EB•ED	--	--	--	--	--
	FA	--	--	--	--	--
	FB	--	--	--	--	--
	GB•GD•GJ	--	--	--	--	--
	HA	--	--	--	--	--
	HB	--	--	--	--	--
	JA	--	--	--	--	--
EVL-155-□-□-28** (19< S≦ 28)	FA•FB•FC	229.5	152	□100	35	67
	GA•GB•GC•GD•GE•GF•GG•GH	229.5	152	□115	35	67
	HA•HC•HD	229.5	152	□130	35	67
	HB	239.5	162	□130	45	77
	HF	224.5	147	□130	30	62
	JA•JB•JC•JF	229.5	152	□150	35	67
	KA•KB•KE	229.5	152	□180	35	67
	LA	229.5	152	□200	35	67
	LB	239.5	162	□200	45	77
	MA	229.5	152	□220	35	67
	MB	239.5	162	□220	45	77
EVL-155-□-□-38** (28< S≦ 38)	HA	244.5	167	□130	45	82
	HB•HE	239.5	162	□130	40	77
	JA	244.5	167	□150	45	82
	KA•KB•KC	244.5	167	□180	45	82
	KD	279.5	202	□180	80	117
	KE	259.5	182	□180	60	97
	LB	254.5	177	□200	55	92
	MA•MB	244.5	167	□220	45	82
	MC	259.5	182	□220	60	97
	MD	254.5	177	□220	55	92
EVL-155-□-□-48** (38< S≦ 48)	KA	290.5	213	□180	75	118
	KB•KC	270.5	193	□180	55	98
	LA	270.5	193	□200	55	98
	MA	270.5	193	□220	55	98
	MB	290.5	213	□220	75	118

*1) Double reduction : 1/3~ 1/10 *2) Bushing will be inserted to adapt to motor shaft

For an explanation on the Adapter Flange Code, please turn to page 422.

A more comprehensive adapter flange offering can be found using the NIDEC-SHIMPO Online Selector Tool. The variety is constantly expanding and being updated on the Selector Tool. If you have any questions or need any support, contact NIDEC-SHIMPO.

EVL-155 – 3-Stage Adapter Dimensions

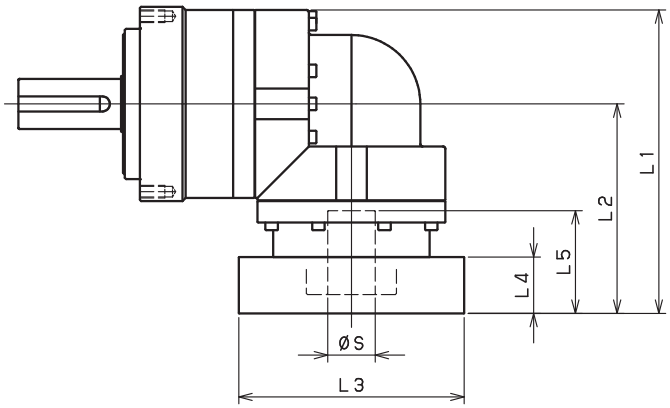

Model number	**: Adapter code	3-Stage				
		L1	L2	L3	L4	L5
EVL-155-□-□-19** (S≦19)	DA•DB•DC	187.5	110	□80	25	50
	EB•ED	187.5	110	□90	25	50
	FA	187.5	110	□100	25	50
	FB	197.5	120	□100	35	60
	GB•GD•GJ	187.5	110	□115	25	50
	HA	187.5	110	□130	25	50
	HB	202.5	125	□130	40	65
	JA	197.5	120	□150	35	60
EVL-155-□-□-28** (19< S≦ 28)	FA•FB•FC	213.5	136	□100	35	67
	GA•GB•GC•GD•GE•GF•GG•GH	213.5	136	□115	35	67
	HA•HC•HD	213.5	136	□130	35	67
	HB	223.5	146	□130	45	77
	HF	208.5	131	□130	30	62
	JA•JB•JC•JF	213.5	136	□150	35	67
	KA•KB•KE	213.5	136	□180	35	67
	LA	213.5	136	□200	35	67
	LB	223.5	146	□200	45	77
	MA	213.5	136	□220	35	67
	MB	223.5	146	□220	45	77
EVL-155-□-□-38** (28< S≦ 38)	HA	230.5	153	□130	45	82
	HB•HE	225.5	148	□130	40	77
	JA	230.5	153	□150	45	82
	KA•KB•KC	230.5	153	□180	45	82
	KD	265.5	188	□180	80	117
	KE	245.5	168	□180	60	97
	LB	240.5	163	□200	55	92
	MA•MB	230.5	153	□220	45	82
	MC	245.5	168	□220	60	97
	MD	240.5	163	□220	55	92
EVL-155-□-□-48** (38< S≦ 48)	KA	--	--	--	--	--
	KB•KC	--	--	--	--	--
	LA	--	--	--	--	--
	MA	--	--	--	--	--
	MB	--	--	--	--	--

*1) Triple reduction : 1/15~ 1/100 *2) Bushing will be inserted to adapt to motor shaft

For an explanation on the Adapter Flange Code, please turn to page 422.

A more comprehensive adapter flange offering can be found using the NIDEC-SHIMPO Online Selector Tool. The variety is constantly expanding and being updated on the Selector Tool. If you have any questions or need any support, contact NIDEC-SHIMPO.

EVL-205 – 2-Stage Specifications

Frame Size	**205**									
Stage	**2-Stage**									
Ratio	Units	Note	3	4	5	6	7	8	9	10
Nominal Output Torque	[Nm]	*1	400	575	600	600	600	600	400	400
Maximum Acceleration Torque	[Nm]	*2	575	770	960	1120	1120	1120	775	775
Emergency Stop Torque	[Nm]	*3	1300	1700	2000	2500	2500	2500	2000	2000
Nominal Input Speed	[rpm]	*4	1500							
Maximum Input Speed	[rpm]	*5	3000							
No Load Running Torque	[Nm]	*6	10.8							
Permitted Radial Load	[N]	*7	5600	6200	6700	7100	7400	7800	8100	8400
Permitted Axial Load	[N]	*8	4300	4900	5400	5800	6300	6600	7000	7300
Maximum Radial Load	[N]	*9	15000							
Maximum Axial Load	[N]	*10	14000							
Moment of Inertia (≤Ø 28)	[kgcm2]	--	--	--	--	--	--	--	--	--
Moment of Inertia (≤Ø 38)	[kgcm2]	--	93.71	77.72	71.89	68.74	66.43	65.27	64.60	64.28
Moment of Inertia (≤Ø 48)	[kgcm2]	--	128.6	112.6	106.8	103.6	101.3	100.1	99.46	99.14
Moment of Inertia (≤ Ø 65)	[kgcm2]	--	214.2	198.2	192.4	189.2	186.9	185.7	185.1	184.7
Efficiency	[%]	*11	93							
Torsional Rigidity	[Nm/arcmin]	*12	175							
Maximum Torsional Backlash	[Arc-min]	--	≤ 8							
Noise Level	[dB]	*13	≤ 85							
Protection Class	--	*14	IP54 (IP65)							
Ambient Temperature	[°C]	--	0-40							
Permitted Housing Temperature	[°C]	--	90							
Weight	[kg]	*15	52							

EVL-205 – 3-Stage Specifications

Frame Size	**205**									
Stage	**3-Stage**									
Ratio	Units	Note	15	16	20	25	28	30	35	40
Nominal Output Torque	[Nm]	*1	400	555	600	600	600	400	600	600
Maximum Acceleration Torque	[Nm]	*2	775	1120	1120	1120	1120	775	1120	1120
Emergency Stop Torque	[Nm]	*3	2000	2500	2500	2500	2500	2000	2500	2500
Nominal Input Speed	[rpm]	*4	1500							
Maximum Input Speed	[rpm]	*5	3000							
No Load Running Torque	[Nm]	*6	4.7							
Permitted Radial Load	[N]	*7	9600	9800	11000	11000	12000	12000	13000	13000
Permitted Axial Load	[N]	*8	8700	8900	9900	11000	11000	12000	13000	13000
Maximum Radial Load	[N]	*9	15000							
Maximum Axial Load	[N]	*10	14000							
Moment of Inertia (≤Ø 28)	[kgcm2]	--	11.49	12.09	11.15	10.98	11.59	10.33	10.83	10.24
Moment of Inertia (≤Ø 38)	[kgcm2]	--	20.28	20.88	19.94	19.77	20.38	19.11	19.62	19.03
Moment of Inertia (≤Ø 48)	[kgcm2]	--	25.10	25.70	24.76	24.59	25.20	23.94	24.44	23.85
Moment of Inertia (≤ Ø 65)	[kgcm2]	--	--	--	--	--	--	--	--	--
Efficiency	[%]	*11	88							
Torsional Rigidity	[Nm/arcmin]	*12	175							
Maximum Torsional Backlash	[Arc-min]	--	≤ 11							
Noise Level	[dB]	*13	≤ 85							
Protection Class	--	*14	IP54 (IP65)							
Ambient Temperature	[°C]	--	0-40							
Permitted Housing Temperature	[°C]	--	90							
Weight	[kg]	*15	39							

EVL-205 – 3-Stage Specifications

Frame Size	205								
Stage	**3-Stage**								
Ratio	Units	Note	45	50	60	70	80	90	100
Nominal Output Torque	[Nm]	*1	400	600	600	600	600	400	400
Maximum Acceleration Torque	[Nm]	*2	775	1120	1120	1120	1120	775	775
Emergency Stop Torque	[Nm]	*3	2000	2500	2500	2500	2500	2000	2000
Nominal Input Speed	[rpm]	*4	1500						
Maximum Input Speed	[rpm]	*5	3000						
No Load Running Torque	[Nm]	*6	4.7						
Permitted Radial Load	[N]	*7	14000	14000	15000	15000	15000	15000	15000
Permitted Axial Load	[N]	*8	14000	14000	14000	14000	14000	14000	14000
Maximum Radial Load	[N]	*9	15000						
Maximum Axial Load	[N]	*10	14000						
Moment of Inertia (≤Ø 28)	[kgcm2]	--	10.76	10.20	10.18	10.16	10.15	10.15	10.14
Moment of Inertia (≤Ø 38)	[kgcm2]	--	19.55	18.99	18.96	18.95	18.94	18.93	18.93
Moment of Inertia (≤Ø 48)	[kgcm2]	--	24.37	23.81	23.78	23.77	23.76	23.75	23.75
Moment of Inertia (≤ Ø 65)	[kgcm2]	--	--	--	--	--	--	--	--
Efficiency	[%]	*11	88						
Torsional Rigidity	[Nm/arcmin]	*12	175						
Maximum Torsional Backlash	[Arc-min]	--	≤ 11						
Noise Level	[dB]	*13	≤ 85						
Protection Class	--	*14	IP54 (IP65)						
Ambient Temperature	[°C]	--	0-40						
Permitted Housing Temperature	[°C]	--	90						
Weight	[kg]	*15	39						

*1) At nominal input speed, service life is 20,000 hours
*2) The maximum torque when starting or stopping operation
*3) The maximum torque allowed under a stress situation (Permitted 1,000 times during service life)
*4) The average input speed
*5) The maximum intermittent input speed
*6) This is the torque at no load applied on the input shaft. The input speed is 1500 rpm for EVL205
*7) At this load and nominal input speed, service life will be 20,000 hours. (The radial load applied to the output side bearing)
*8) At this load and nominal input speed, service life will be 20,000 hours. (The axial load applied to the output shaft center)
*9) The maximum radial load that the reducer can accept
*10) The maximum axial load that the reducer can accept
*11) The efficiency at the nominal torque rating
*12) This does not include the lost motion
*13) Contact NIDEC-SHIMPO for the testing conditions and environment
*14) IP65 (wash-down) is available as an option. Contact NIDEC-SHIMPO for more details and our food grade options
*15) The weight may vary slightly between models

EVL-205 – 2-Stage Dimensions

Input shaft bore ≦φ38

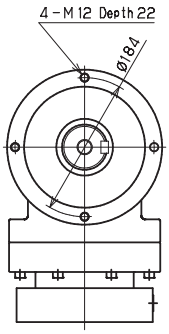

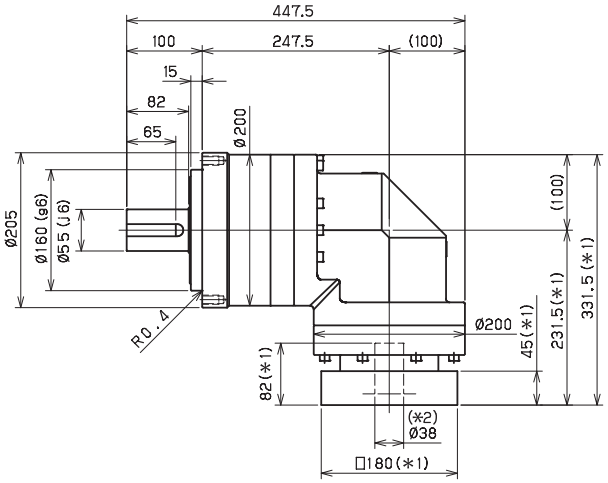

Input shaft bore ≦φ48

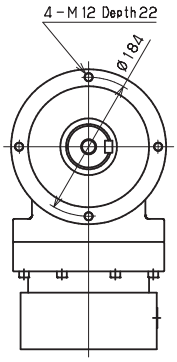

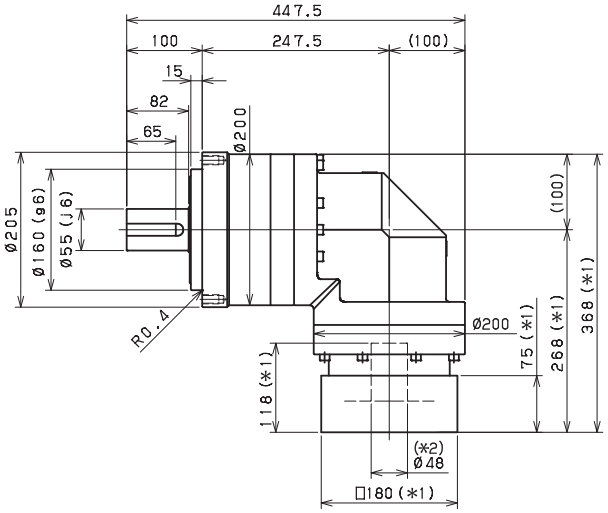

Input shaft bore ≦φ65

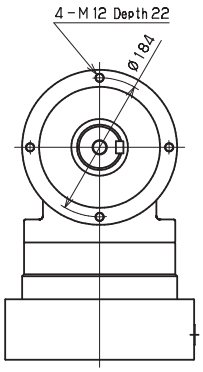

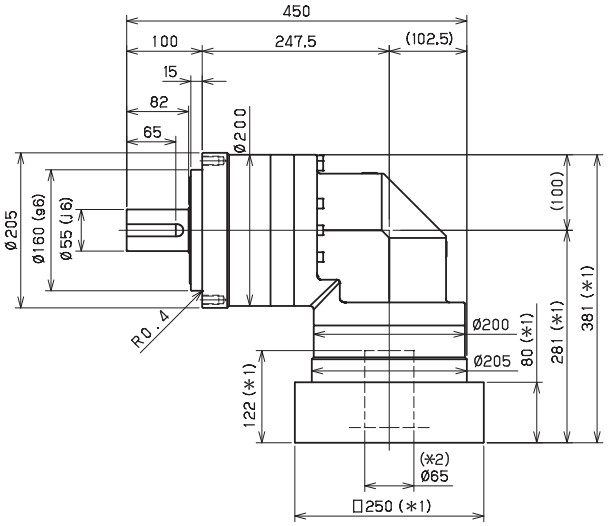

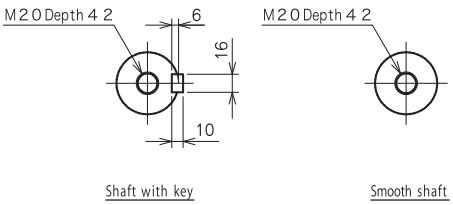

*1) Length will vary depending on motor.

*2) Bushing will be inserted to adapt to motor shaft

EVL-205 – 3-Stage Dimensions

Input shaft bore ≦φ28

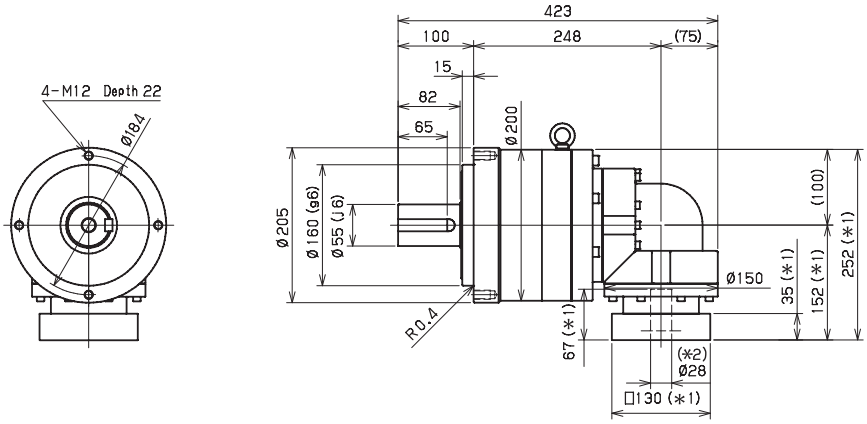

Input shaft bore ≦φ38

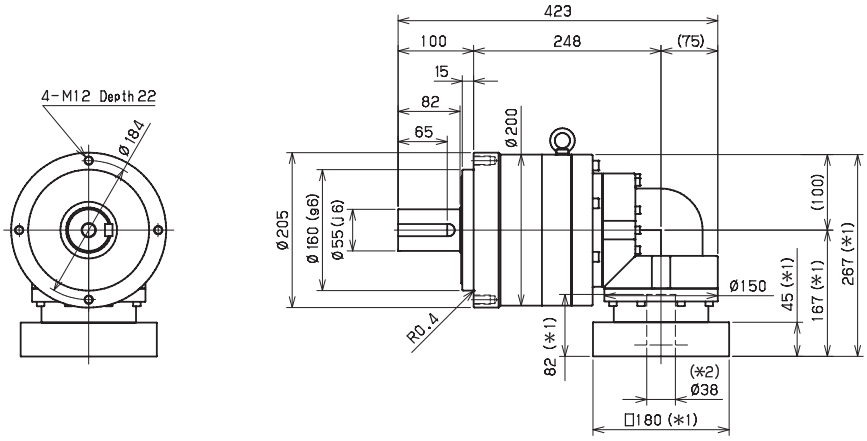

Input shaft bore ≦φ48

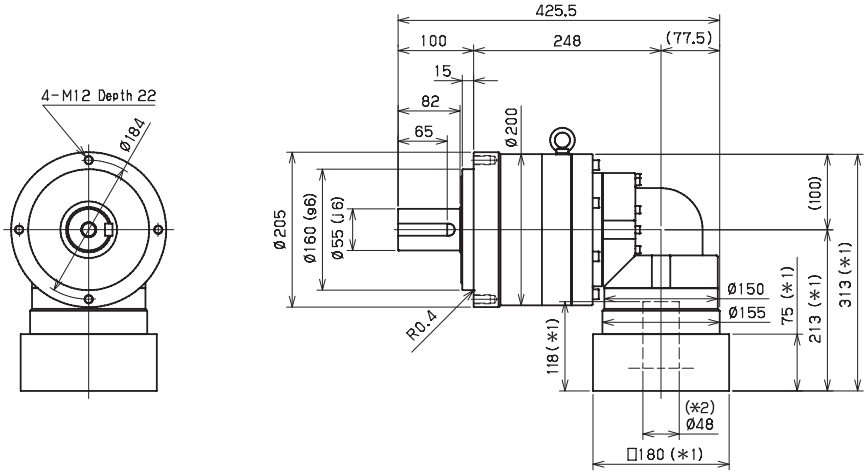

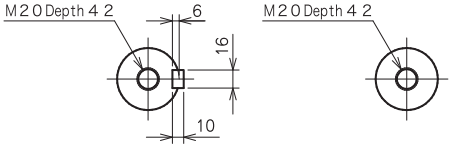

Shaft with key　　Smooth shaft

*1) Length will vary depending on motor.

*2) Bushing will be inserted to adapt to motor shaft

EVL-205 – 2-Stage Adapter Dimensions

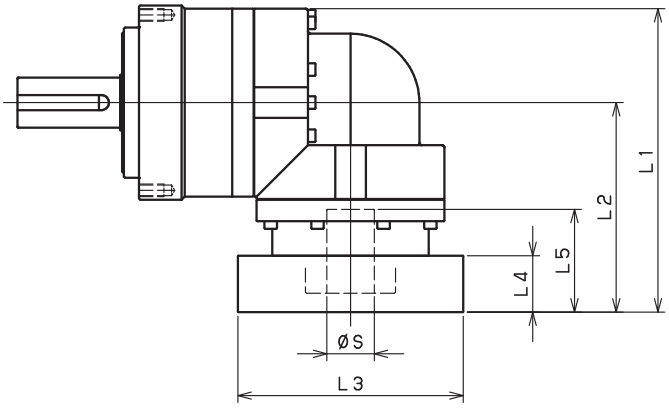

Model number	**: Adapter code	2-Stage				
		L1	L2	L3	L4	L5
EVL-205-□-□-28** (S≦ 28)	FA•FB•FC	--	--	--	--	--
	GA•GB•GC•GD•GE•GF•GG•GH	--	--	--	--	--
	HA•HC•HD	--	--	--	--	--
	HB	--	--	--	--	--
	HF	--	--	--	--	--
	JA•JB•JC•JF	--	--	--	--	--
	KA•KB•KE	--	--	--	--	--
	LA	--	--	--	--	--
	LB	--	--	--	--	--
	MA	--	--	--	--	--
	MB	--	--	--	--	--
EVL-205-□-□-38** (28< S≦ 38)	HA	331.5	231.5	□130	45	82
	HB•HE	326.5	226.5	□130	40	77
	JA	331.5	231.5	□150	45	82
	KA•KB•KC	331.5	231.5	□180	45	82
	KD	366.5	266.5	□180	80	117
	KE	346.5	246.5	□180	60	97
	LA	331.5	231.5	□200	45	82
	LB	341.5	241.5	□200	55	92
	MA•MB	331.5	231.5	□220	45	82
	MC	346.5	246.5	□220	60	97
	MD	341.5	241.5	□220	55	92
	NA	331.5	231.5	□250	45	82
EVL-205-□-□-48** (38< S≦ 48)	KA	368	268	□180	75	118
	KB•KC	348	248	□180	55	98
	LA	348	248	□200	55	98
	MA	348	248	□220	55	98
	MB	368	268	□220	75	118
	NA	368	268	□250	75	118
	PA	368	268	□280	75	118
EVL-205-□-□-65** (48< S≦ 65)	MA•MB•MC•MD	381	281	□220	80	122
	NA•NC	381	281	□250	80	122
	NB•ND	411	311	□250	110	152
	PA	401	301	□280	100	142
	PB	411	311	□280	110	152

*1) Double reduction : 1/3~ 1/10 *2) Bushing will be inserted to adapt to motor shaft

For an explanation on the Adapter Flange Code, please turn to page 422.

A more comprehensive adapter flange offering can be found using the NIDEC-SHIMPO Online Selector Tool. The variety is constantly expanding and being updated on the Selector Tool. If you have any questions or need any support, contact NIDEC-SHIMPO.

EVL-205 – 3-Stage Adapter Dimensions

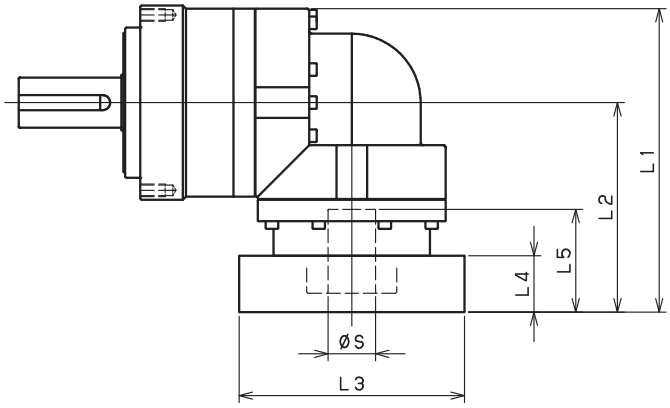

Model number	**: Adapter code	3-Stage				
		L1	L2	L3	L4	L5
EVL-205-□-□-28** (S≦ 28)	FA•FB•FC	252	152	□100	35	67
	GA•GB•GC•GD•GE•GF•GG•GH	252	152	□115	35	67
	HA•HC•HD	252	152	□130	35	67
	HB	262	162	□130	45	77
	HF	247	147	□130	30	62
	JA•JB•JC•JF	252	152	□150	35	67
	KA•KB•KE	252	152	□180	35	67
	LA	252	152	□200	35	67
	LB	262	162	□200	45	77
	MA	252	152	□220	35	67
	MB	262	162	□220	45	77
EVL-205-□-□-38** (28< S≦ 38)	HA	267	167	□130	45	82
	HB•HE	262	162	□130	40	77
	JA	267	167	□150	45	82
	KA•KB•KC	267	167	□180	45	82
	KD	302	202	□180	80	117
	KE	282	182	□180	60	97
	LA	267	167	□200	45	82
	LB	277	177	□200	55	92
	MA•MB	267	167	□220	45	82
	MC	282	182	□220	60	97
	MD	277	177	□220	55	92
	NA	267	167	□250	45	82
EVL-205-□-□-48** (38< S≦ 48)	KA	313	213	□180	75	118
	KB•KC	293	193	□180	55	98
	LA	293	193	□200	55	98
	MA	293	193	□220	55	98
	MB	313	213	□220	75	118
	NA	313	213	□250	75	118
	PA	313	213	□280	75	118
EVL-205-□-□-65** (48< S≦ 65)	MA•MB•MC•MD	--	--	--	--	--
	NA•NC	--	--	--	--	--
	NB•ND	--	--	--	--	--
	PA	--	--	--	--	--
	PB	--	--	--	--	--

*1) Triple reduction : 1/15~ 1/100 *2) Bushing will be inserted to adapt to motor shaft

For an explanation on the Adapter Flange Code, please turn to page 422.

A more comprehensive adapter flange offering can be found using the NIDEC-SHIMPO Online Selector Tool. The variety is constantly expanding and being updated on the Selector Tool. If you have any questions or need any support, contact NIDEC-SHIMPO.

EVL-235 – 2-Stage Specifications

Frame Size	**235**									
Stage	**2-Stage**									
Ratio	Units	Note	3	4	5	6	7	8	9	10
Nominal Output Torque	[Nm]	*1	575	765	960	1150	1200	1200	800	800
Maximum Acceleration Torque	[Nm]	*2	1015	1355	1695	1840	1840	1760	1520	1280
Emergency Stop Torque	[Nm]	*3	2500	3300	4000	4500	4500	4500	3600	3600
Nominal Input Speed	[rpm]	*4	1000							
Maximum Input Speed	[rpm]	*5	2000							
No Load Running Torque	[Nm]	*6	14.5							
Permitted Radial Load	[N]	*7	5800	6400	6900	7300	7700	8000	8400	8700
Permitted Axial Load	[N]	*8	6400	7200	7900	8600	9200	9700	10000	11000
Maximum Radial Load	[N]	*9	15000							
Maximum Axial Load	[N]	*10	14000							
Moment of Inertia (≤Ø 38)	[kgcm2]	--	--	--	--	--	--	--	--	--
Moment of Inertia (≤Ø 48)	[kgcm2]	--	148.00	122.90	113.30	108.10	104.70	102.70	101.60	101.00
Moment of Inertia (≤ Ø 65)	[kgcm2]	--	223.20	198.10	188.60	183.30	180.00	178.00	176.80	176.20
Efficiency	[%]	*11	93							
Torsional Rigidity	[Nm/arcmin]	*12	400							
Maximum Torsional Backlash	[Arc-min]	--	≤ 8							
Noise Level	[dB]	*13	≤ 85							
Protection Class	--	*14	IP54 (IP65)							
Ambient Temperature	[°C]	--	0-40							
Permitted Housing Temperature	[°C]	--	90							
Weight	[kg]	*15	68							

EVL-235 – 3-Stage Specifications

Frame Size	**235**									
Stage	**3-Stage**									
Ratio	Units	Note	15	16	20	25	28	30	35	40
Nominal Output Torque	[Nm]	*1	800	1200	1200	1200	1200	800	1200	1200
Maximum Acceleration Torque	[Nm]	*2	1280	1840	1840	1840	1840	1280	1840	1840
Emergency Stop Torque	[Nm]	*3	3600	4500	4500	4500	4500	3600	4500	4500
Nominal Input Speed	[rpm]	*4	1000							
Maximum Input Speed	[rpm]	*5	2000							
No Load Running Torque	[Nm]	*6	10.2							
Permitted Radial Load	[N]	*7	9900	10000	11000	12000	12000	13000	13000	14000
Permitted Axial Load	[N]	*8	13000	13000	14000	14000	14000	14000	14000	14000
Maximum Radial Load	[N]	*9	15000							
Maximum Axial Load	[N]	*10	14000							
Moment of Inertia (≤Ø 38)	[kgcm2]	--	36.32	37.24	35.75	35.47	36.39	34.39	35.21	34.25
Moment of Inertia (≤Ø 48)	[kgcm2]	--	66.14	67.06	65.57	65.28	66.21	64.21	65.03	64.07
Moment of Inertia (≤ Ø 65)	[kgcm2]	--	--	--	--	--	--	--	--	--
Efficiency	[%]	*11	88							
Torsional Rigidity	[Nm/arcmin]	*12	400							
Maximum Torsional Backlash	[Arc-min]	--	≤ 11							
Noise Level	[dB]	*13	≤ 85							
Protection Class	--	*14	IP54 (IP65)							
Ambient Temperature	[°C]	--	0-40							
Permitted Housing Temperature	[°C]	--	90							
Weight	[kg]	*15	70							

EVL-235 – 3-Stage Specifications

Frame Size	**235**								
Stage	**3-Stage**								
Ratio	Units	Note	45	50	60	70	80	90	100
Nominal Output Torque	[Nm]	*1	800	1200	1200	1200	1200	800	800
Maximum Acceleration Torque	[Nm]	*2	1040	1840	1840	1840	1440	1040	960
Emergency Stop Torque	[Nm]	*3	3600	4500	4500	4500	4500	3600	3600
Nominal Input Speed	[rpm]	*4	1000						
Maximum Input Speed	[rpm]	*5	2000						
No Load Running Torque	[Nm]	*6	10.2						
Permitted Radial Load	[N]	*7	14000	15000	15000	15000	15000	15000	15000
Permitted Axial Load	[N]	*8	14000	14000	14000	14000	14000	14000	14000
Maximum Radial Load	[N]	*9	15000						
Maximum Axial Load	[N]	*10	14000						
Moment of Inertia (≤Ø 38)	[kgcm2]	--	35.10	34.18	34.14	34.11	34.10	34.09	34.08
Moment of Inertia (≤Ø 48)	[kgcm2]	--	64.92	63.99	63.95	63.93	63.91	63.90	63.90
Moment of Inertia (≤ Ø 65)	[kgcm2]	--	--	--	--	--	--	--	--
Efficiency	[%]	*11	88						
Torsional Rigidity	[Nm/arcmin]	*12	400						
Maximum Torsional Backlash	[Arc-min]	--	≤ 11						
Noise Level	[dB]	*13	≤ 85						
Protection Class	--	*14	IP54 (IP65)						
Ambient Temperature	[°C]	--	0-40						
Permitted Housing Temperature	[°C]	--	90						
Weight	[kg]	*15	70						

*1) At nominal input speed, service life is 20,000 hours
*2) The maximum torque when starting or stopping operation
*3) The maximum torque allowed under a stress situation (Permitted 1,000 times during service life)
*4) The average input speed
*5) The maximum intermittent input speed
*6) This is the torque at no load applied on the input shaft. The input speed is 1000 rpm for EVL235
*7) At this load and nominal input speed, service life will be 20,000 hours. (The radial load applied to the output side bearing)
*8) At this load and nominal input speed, service life will be 20,000 hours. (The axial load applied to the output shaft center)
*9) The maximum radial load that the reducer can accept
*10) The maximum axial load that the reducer can accept
*11) The efficiency at the nominal torque rating
*12) This does not include the lost motion
*13) Contact NIDEC-SHIMPO for the testing conditions and environment
*14) IP65 (wash-down) is available as an option. Contact NIDEC-SHIMPO for more details and our food grade options
*15) The weight may vary slightly between models

EVL-235 – 2-Stage Dimensions

Input shaft bore ≦φ48

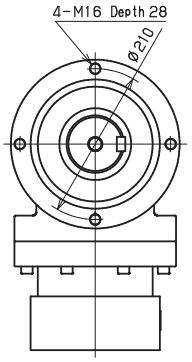

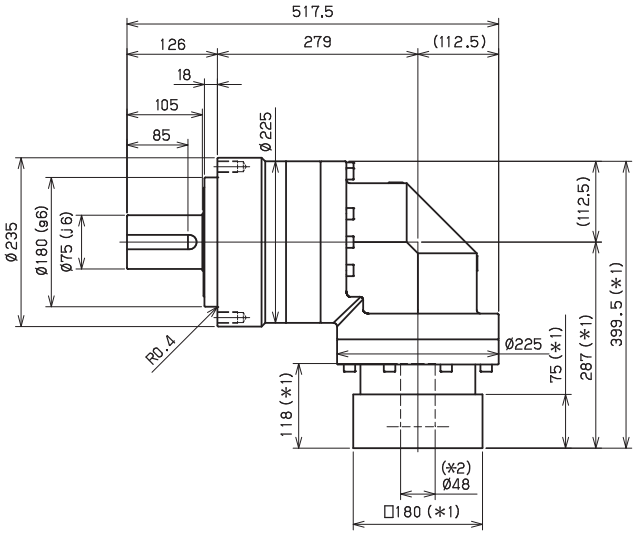

Input shaft bore ≦φ65

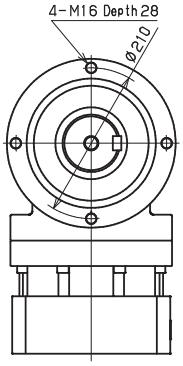

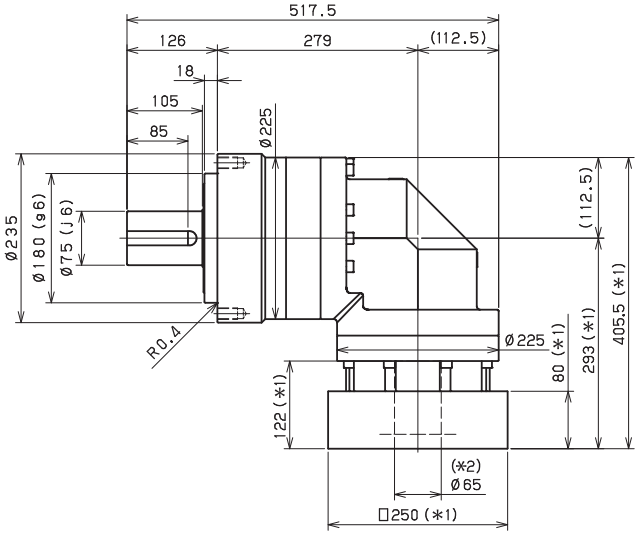

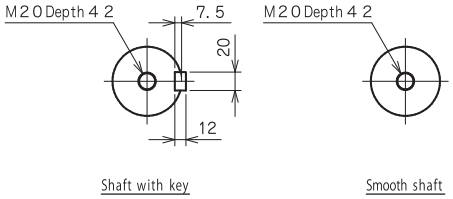

*1) Length will vary depending on motor.

*2) Bushing will be inserted to adapt to motor shaft

EVL-235 – 3-Stage Dimensions

Input shaft bore ≦φ38

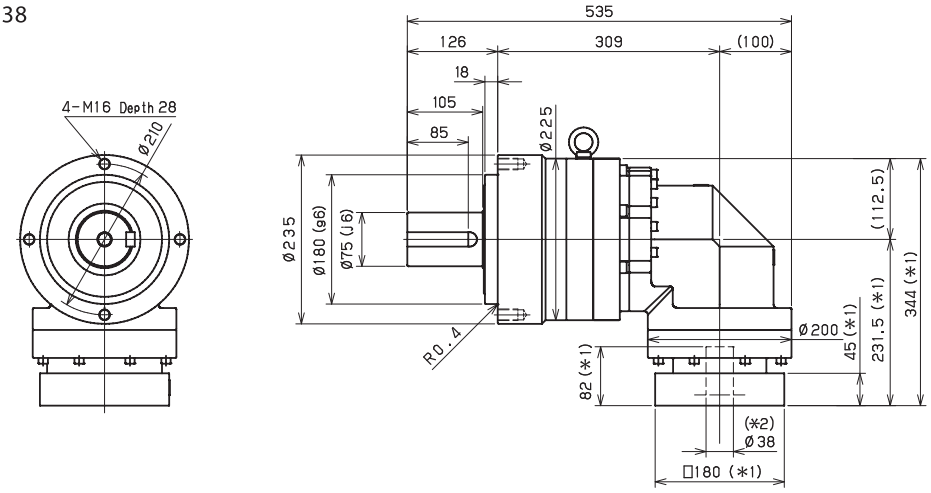

Input shaft bore ≦φ48

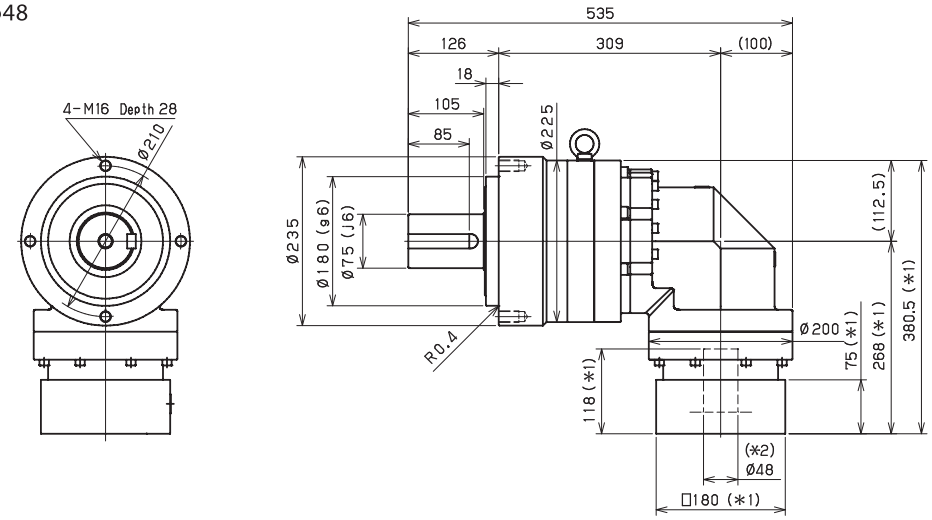

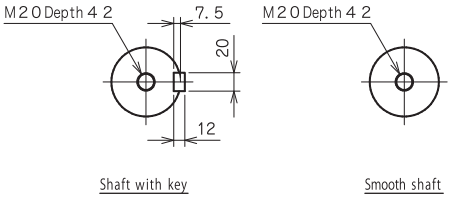

*1) Length will vary depending on motor.

*2) Bushing will be inserted to adapt to motor shaft

EVL-235 – 2-Stage Adapter Dimensions

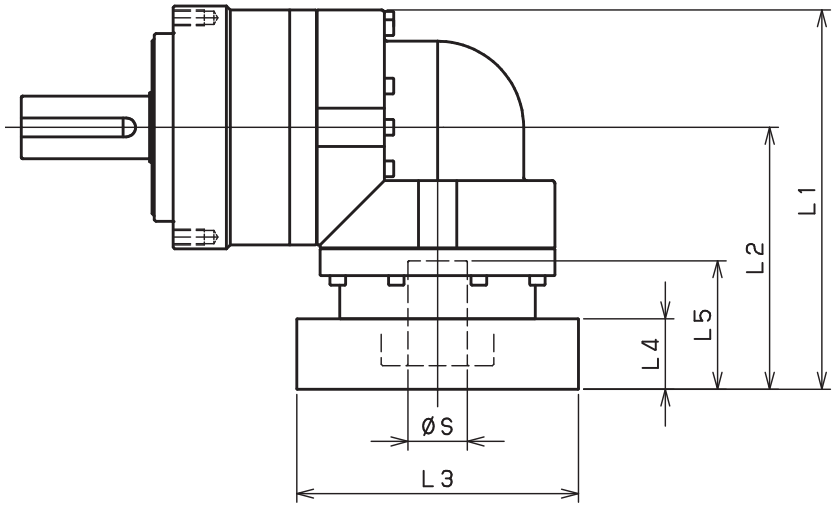

Model number	**: Adapter code	2-Stage				
		L1	L2	L3	L4	L5
EVL-235-□-□-38** (S≦ 38)	HA	--	--	--	--	--
	HB•HE	--	--	--	--	--
	JA	--	--	--	--	--
	KA•KB•KC	--	--	--	--	--
	KD	--	--	--	--	--
	KE	--	--	--	--	--
	LA	--	--	--	--	--
	LB	--	--	--	--	--
	MA•MB	--	--	--	--	--
	MC	--	--	--	--	--
	MD	--	--	--	--	--
	NA	--	--	--	--	--
EVL-235-□-□-48** (38< S≦ 48)	KA	399.5	287	□180	75	118
	KB•KC	379.5	267	□180	55	98
	LA	379.5	267	□200	55	98
	MA	379.5	267	□220	55	98
	MB	399.5	287	□220	75	118
	NA	399.5	287	□250	75	118
	PA	399.5	287	□280	75	118
EVL-235-□-□-65** (48< S≦ 65)	MA•MB•MC•MD	405.5	293	□220	80	122
	NA•NC	405.5	293	□250	80	122
	NB•ND	435.5	323	□250	110	152
	PA	425.5	313	□280	100	142
	PB	435.5	323	□280	110	152
	QA•QB	425.5	313	□320	100	142

*1) Double reduction : 1/3~ 1/10

*2) Bushing will be inserted to adapt to motor shaft

For an explanation on the Adapter Flange Code, please turn to page 422.

A more comprehensive adapter flange offering can be found using the NIDEC-SHIMPO Online Selector Tool. The variety is constantly expanding and being updated on the Selector Tool. If you have any questions or need any support, contact NIDEC-SHIMPO.

EVL-235 – 3-Stage Adapter Dimensions

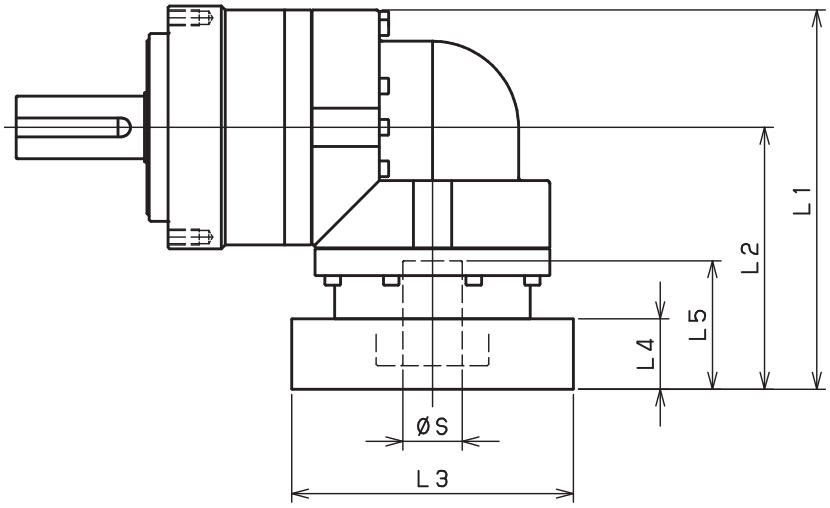

Model number	**: Adapter code	3-Stage				
		L1	L2	L3	L4	L5
EVL-235-□-□-38** (S≦ 38)	HA	344	231.5	□130	45	82
	HB•HE	339	226.5	□130	40	77
	JA	344	231.5	□150	45	82
	KA•KB•KC	344	231.5	□180	45	82
	KD	379	266.5	□180	80	117
	KE	359	246.5	□180	60	97
	LA	344	231.5	□200	45	82
	LB	354	241.5	□200	55	92
	MA•MB	344	231.5	□220	45	82
	MC	359	246.5	□220	60	97
	MD	354	241.5	□220	55	92
	NA	344	231.5	□250	45	82
EVL-235-□-□-48** (38< S≦ 48)	KA	380.5	268	□180	75	118
	KB•KC	360.5	248	□180	55	98
	LA	360.5	248	□200	55	98
	MA	360.5	248	□220	55	98
	MB	380.5	268	□220	75	118
	NA	380.5	268	□250	75	118
	PA	380.5	268	□280	75	118
EVL-235-□-□-65** (48< S≦ 65)	MA•MB•MC•MD	--	--	--	--	--
	NA•NC	--	--	--	--	--
	NB•ND	--	--	--	--	--
	PA	--	--	--	--	--
	PB	--	--	--	--	--
	QA•QB	--	--	--	--	--

*1) Triple reduction : 1/15~ 1/100

*2) Bushing will be inserted to adapt to motor shaft

For an explanation on the Adapter Flange Code, please turn to page 422.

A more comprehensive adapter flange offering can be found using the NIDEC-SHIMPO Online Selector Tool. The variety is constantly expanding and being updated on the Selector Tool. If you have any questions or need any support, contact NIDEC-SHIMPO.

EVB-SERIES

This gearbox series is the right-angle version of the VRB, offering a compact configuration and output design that provides an OEM with maximum versatility. The through-bolt flange design at the output makes it much easier to assemble the reducer onto machinery. A 1:1 spiral bevel gear for the right-angle connection maintains good positional accuracy at ratios ranging from 3:1 – 100:1. The EVB units will have a minimum backlash of 4 arc-minutes and maximum loads approaching 600 NM.

Equipment manufacturers building custom assembly automation systems will find the flexibility and space-saving features of the EVB an ideal fit for their unique projects. The EVB provides an excellent option when performance, space, and cost all equally impact your reducer selection.

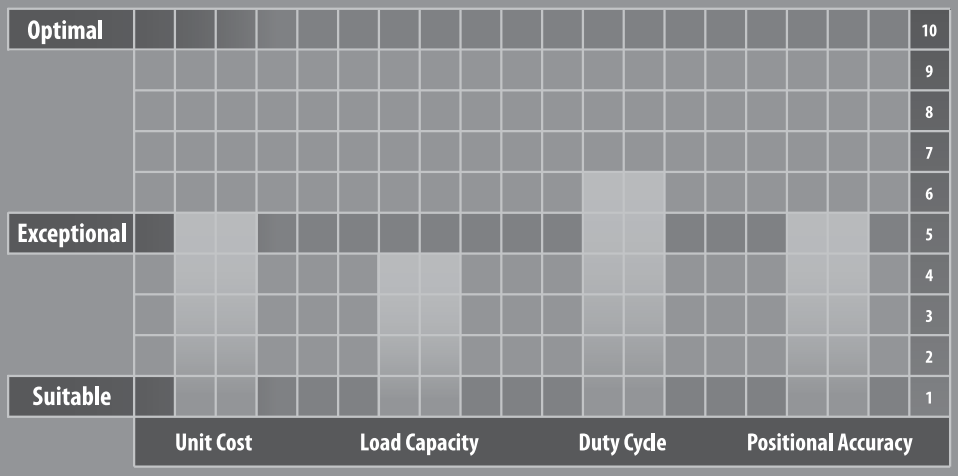

EVB

EVB-SERIES

- Industry standard mounting dimensions
- Large variety of reduction ratios to choose from
- Thru-bolt mounting style
- Maximum flexibility for mounting and clearance constraints
- Low backlash (≤4 arc-min)
- Space-saving design, when minimal envelope required
- Readily available

EVB-Series – Features

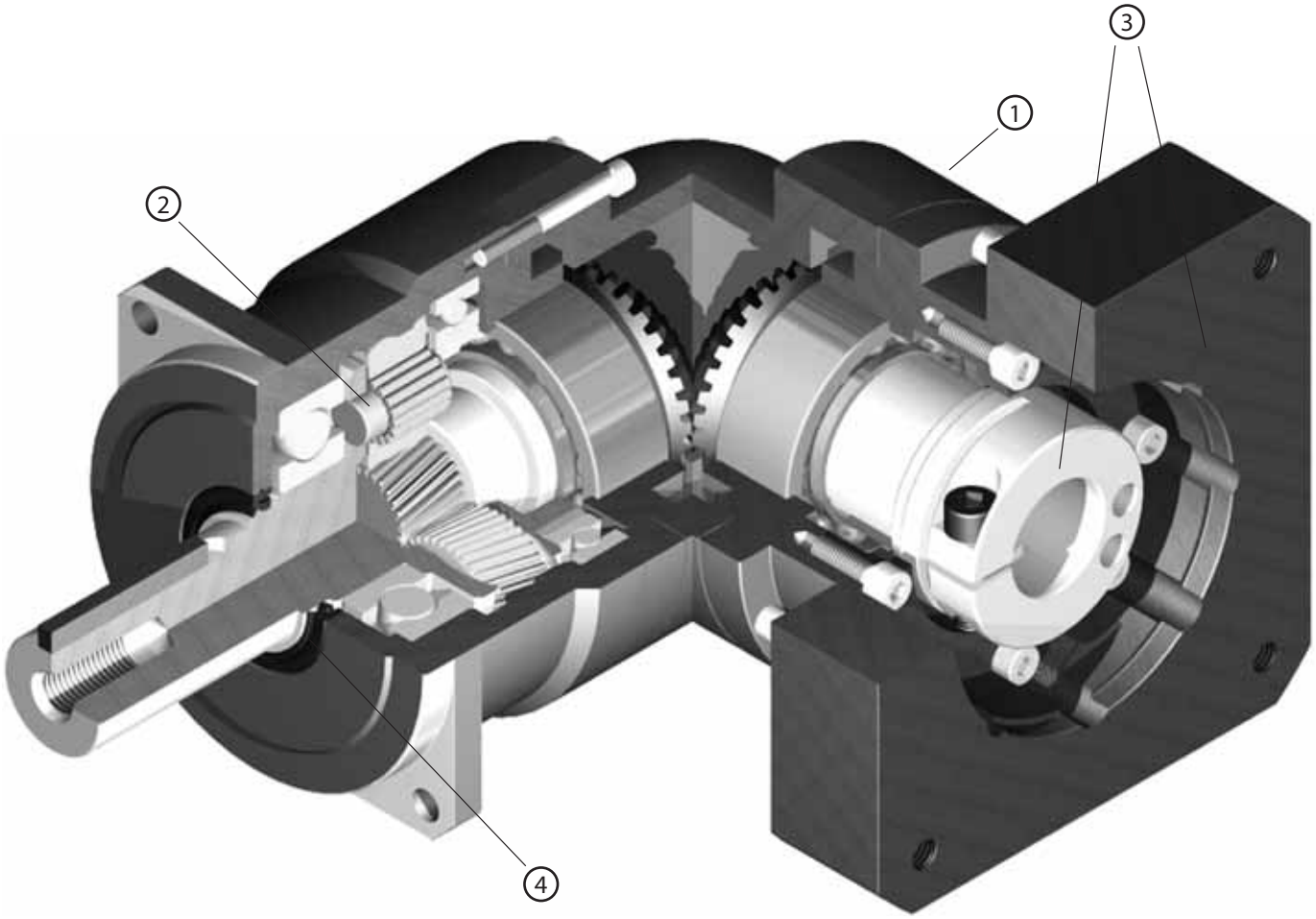

1. Space–saving features; motor can be located at a 90 degree position from the reducer providing a more compact footprint
2. High rigidity and torque capacity are achieved by using uncaged needle roller bearings
3. Adapter-bushing connection; enable a simple, effective attachment to most servo motors
4. No leakage through the seal; high viscosity, anti-separation grease does not liquefy and does not migrate away from the gears
5. No need to replace the grease for the life of the unit. The reducer can be positioned in any orientation

EVB-Series – Model Code

EV	B	–	090	–	7	–	K	6	–	19HB16

- 19HB16: ＊ Adapter flange code
- 6: Backlash
  - 060, 090, 115, 140: 4 arc-min (2stage), 7 arc-min (3stage)
  - 180, 220: 6 arc-min (2stage), 9 arc-min (3stage)
- K: Output style
  - K・・・ Shaft with key
  - S・・・ Smooth shaft
- 7: Ratio
  - 2stage：3, 4, 5, 6, 7, 8, 9, 10
  - 3stage：15, 16, 20, 25, 28, 30, 35, 40, 45, 50, 60, 70, 80, 90, 100
- 090: Frame size 060, 090, 115, 140, 180, 220
- B: Series name EVB Series
- EV: Model name for ABLE reducer

*1) Adapter flange code
Adapter flange code varies depending on the motor.

EVB

Contact us for additional information or refer to our online reducer selection tool.

Selection tool www.nidec-shimpo.co.jp/selection/eng

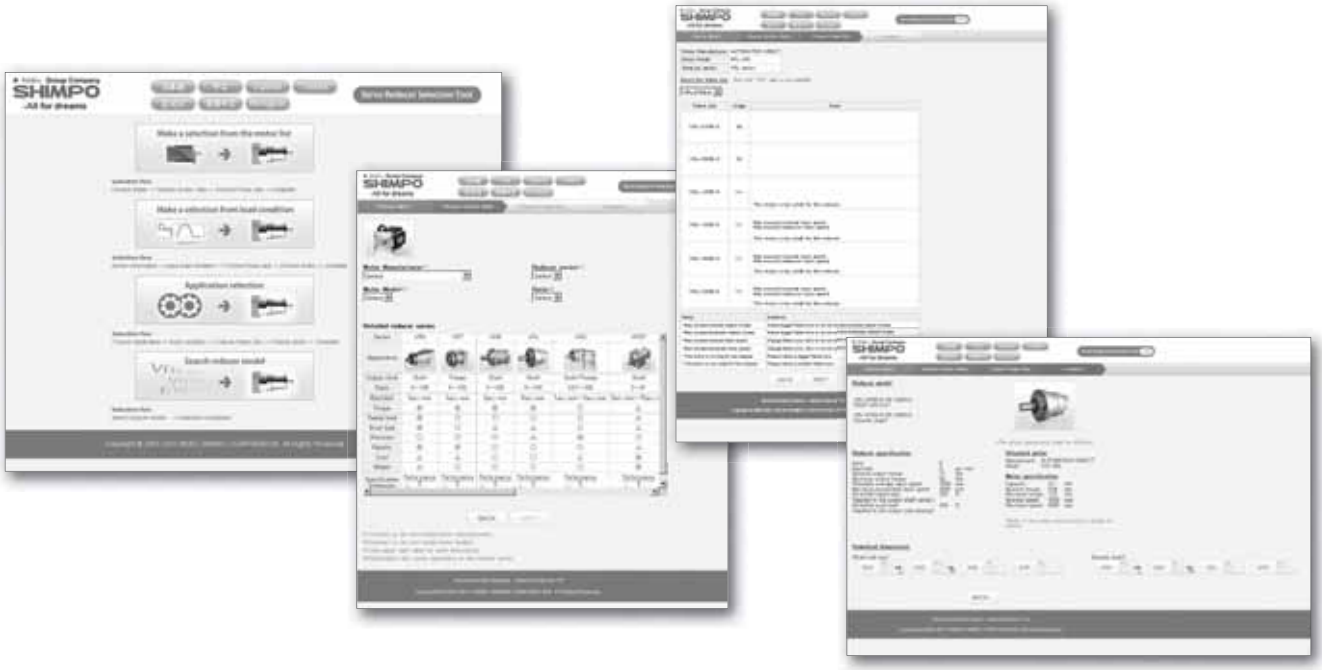

EVB-060 – 2-Stage Specifications

Frame Size	**060**									
Stage	**2-Stage**									
Ratio	Unit	Note	3	4	5	6	7	8	9	10
Nominal Output Torque	[Nm]	*1	12	16	22	24	24	24	16	16
Maximum Acceleration Torque	[Nm]	*2	24	32	40	45	45	45	32	32
Emergency Stop Torque	[Nm]	*3	50	65	80	90	90	90	65	65
Nominal Input Speed	[rpm]	*4	3000							
Maximum Input Speed	[rpm]	*5	6000							
No Load Running Torque	[Nm]	*6	0.33							
Permitted Radial Load	[N]	*7	430	470	510	540	570	600	620	640
Permitted Axial Load	[N]	*8	310	360	390	430	460	480	510	530
Maximum Radial Load	[N]	*9	1200							
Maximum Axial Load	[N]	*10	1100							
Moment of Inertia (≤ Ø 8)	[kgcm2]	--	0.310	0.270	0.250	0.240	0.230	0.230	0.230	0.230
Moment of Inertia (≤ Ø 14)	[kgcm2]	--	0.390	0.340	0.320	0.310	0.310	0.310	0.300	0.300
Moment of Inertia (≤ Ø 19)	[kgcm2]	--	0.580	0.530	0.510	0.500	0.500	0.500	0.490	0.490
Efficiency	[%]	*11	93							
Torsional Rigidity	[Nm/arc-min]	*12	3							
Maximum Torsional Backlash	[arc-min]	--	≤ 4							
Noise Level	[dB]	*13	80							
Protection Class	--	*14	IP54 (IP65)							
Ambient Temperature	[°C]	--	0-40							
Permitted Housing Temperature	[°C]	--	90							
Weight	[kg]	*15	1.8							

EVB-060 – 3-Stage Specifications

Frame Size	**060**									
Stage	**3-Stage**									
Ratio	Unit	Note	15	16	20	25	28	30	35	40
Nominal Output Torque	[Nm]	*1	16	24	24	24	24	16	24	24
Maximum Acceleration Torque	[Nm]	*2	32	45	45	45	45	32	45	45
Emergency Stop Torque	[Nm]	*3	65	90	90	90	90	65	90	90
Nominal Input Speed	[rpm]	*4	3000							
Maximum Input Speed	[rpm]	*5	6000							
No Load Running Torque	[Nm]	*6	0.20							
Permitted Radial Load	[N]	*7	740	750	810	870	910	930	980	1000
Permitted Axial Load	[N]	*8	630	650	720	790	830	860	920	970
Maximum Radial Load	[N]	*9	1200							
Maximum Axial Load	[N]	*10	1100							
Moment of Inertia (≤ Ø 8)	[kgcm2]	--	0.073	0.079	0.071	0.071	0.077	0.062	0.070	0.061
Moment of Inertia (≤ Ø 14)	[kgcm2]	--	0.118	0.124	0.116	0.115	0.122	0.106	0.115	0.106
Moment of Inertia (≤ Ø 19)	[kgcm2]	--	--	--	--	--	--	--	--	--
Efficiency	[%]	*11	88							
Torsional Rigidity	[Nm/arc-min]	*12	3							
Maximum Torsional Backlash	[arc-min]	--	≤ 7							
Noise Level	[dB]	*13	80							
Protection Class	--	*14	IP54 (IP65)							
Ambient Temperature	[°C]	--	0-40							
Permitted Housing Temperature	[°C]	--	90							
Weight	[kg]	*15	1.6							

EVB-060 – 3-Stage Specifications

Frame Size	060								
Stage	**3-Stage**								
Ratio	Unit	Note	45	50	60	70	80	90	100
Nominal Output Torque	[Nm]	*1	16	24	24	24	24	16	16
Maximum Acceleration Torque	[Nm]	*2	32	45	45	45	45	32	32
Emergency Stop Torque	[Nm]	*3	65	90	90	90	90	65	65
Nominal Input Speed	[rpm]	*4	3000						
Maximum Input Speed	[rpm]	*5	6000						
No Load Running Torque	[Nm]	*6	0.20						
Permitted Radial Load	[N]	*7	1100	1100	1200	1200	1200	1200	1200
Permitted Axial Load	[N]	*8	1000	1100	1100	1100	1100	1100	1100
Maximum Radial Load	[N]	*9	1200						
Maximum Axial Load	[N]	*10	1100						
Moment of Inertia (≤ Ø 8)	[kgcm2]	--	0.070	0.061	0.061	0.061	0.061	0.061	0.061
Moment of Inertia (≤ Ø 14)	[kgcm2]	--	0.115	0.106	0.106	0.105	0.105	0.105	0.105
Moment of Inertia (≤ Ø 19)	[kgcm2]	--	--	--	--	--	--	--	--
Efficiency	[%]	*11	88						
Torsional Rigidity	[Nm/arc-min]	*12	3						
Maximum Torsional Backlash	[arc-min]	--	≤ 7						
Noise Level	[dB]	*13	80						
Protection Class	--	*14	IP54 (IP65)						
Ambient Temperature	[°C]	--	0-40						
Permitted Housing Temperature	[°C]	--	90						
Weight	[kg]	*15	1.6						

*1) At nominal input speed, service life is 20,000 hours
*2) The maximum torque when starting or stopping operation
*3) The maximum torque allowed under a stress situation (Permitted 1,000 times during service life)
*4) The average input speed
*5) The maximum intermittent input speed
*6) This is the torque at no load applied on the input shaft. The input speed is 3000 rpm for EVB060
*7) At this load and nominal input speed, service life will be 20,000 hours. (The radial load applied to the output side bearing)
*8) At this load and nominal input speed, service life will be 20,000 hours. (The axial load applied to the output shaft center)
*9) The maximum radial load that the reducer can accept
*10) The maximum axial load that the reducer can accept
*11) The efficiency at the nominal torque rating
*12) This does not include the lost motion
*13) Contact NIDEC-SHIMPO for the testing conditions and environment
*14) IP65 (wash-down) is available as an option. Contact NIDEC-SHIMPO for more details and our food grade options
*15) The weight may vary slightly between models

EVB-060 – 2-Stage Dimensions

Input shaft bore ≦φ8

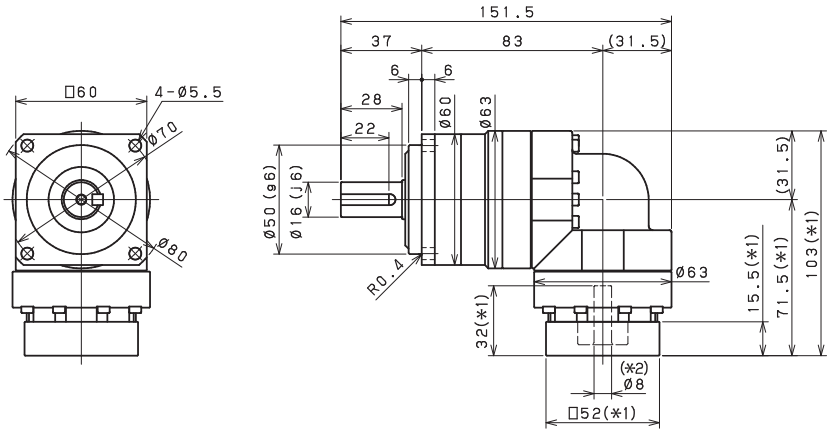

Input shaft bore ≦φ14

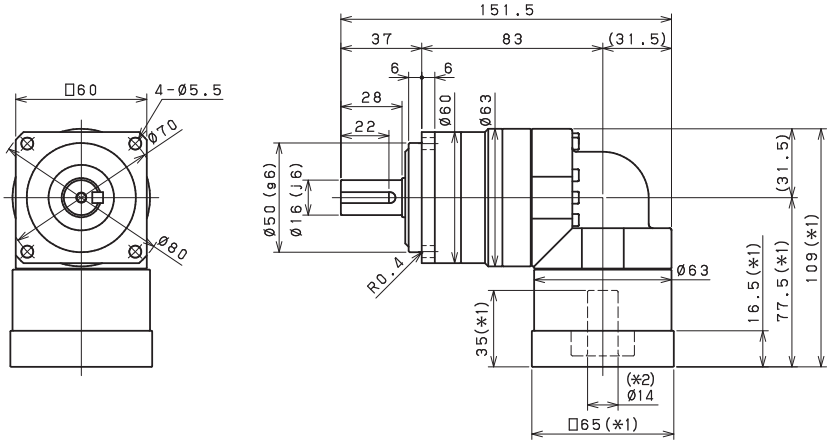

Input shaft bore ≦φ19

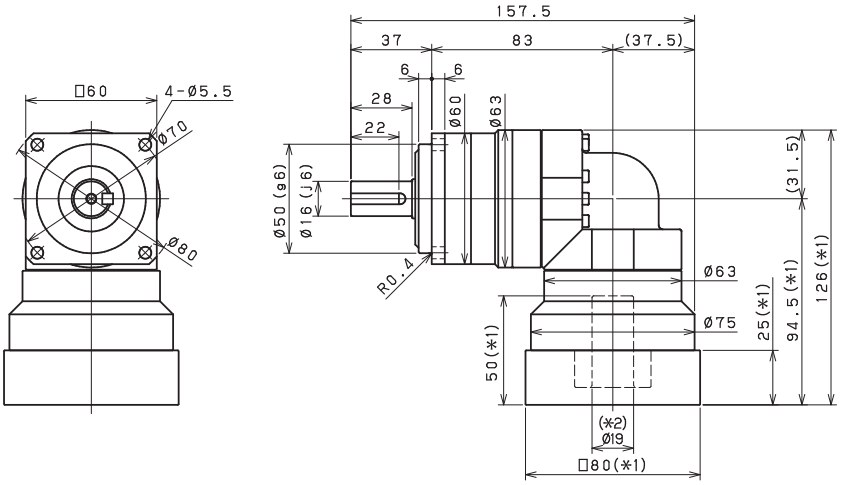

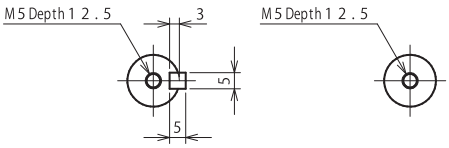

Shaft with key　　Smooth shaft

*1) Length will vary depending on motor

*2) Bushing will be inserted to adapt to motor shaft

EVB-060 – 3-Stage Dimensions

Input shaft bore ≦φ8

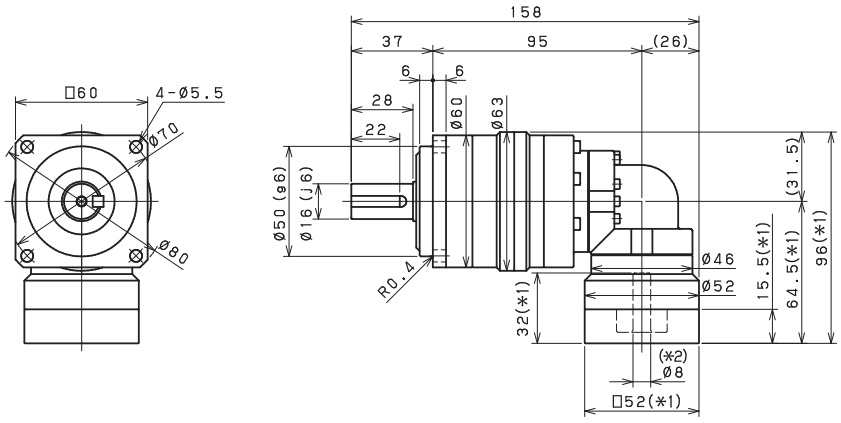

Input shaft bore ≦φ14

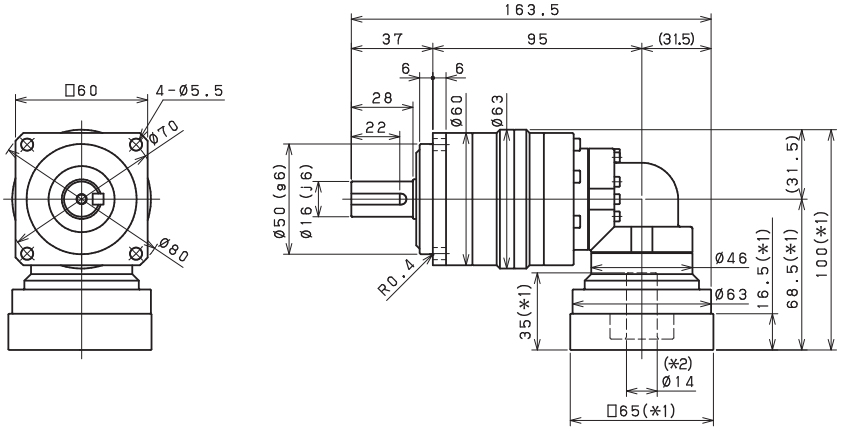

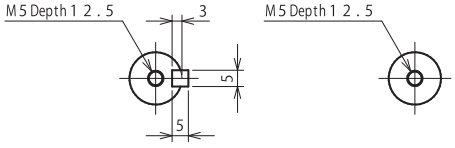

Shaft with key　　Smooth shaft

*1) Length will vary depending on motor

*2) Bushing will be inserted to adapt to motor shaft

EVB-060 – 2-Stage Adapter Dimensions

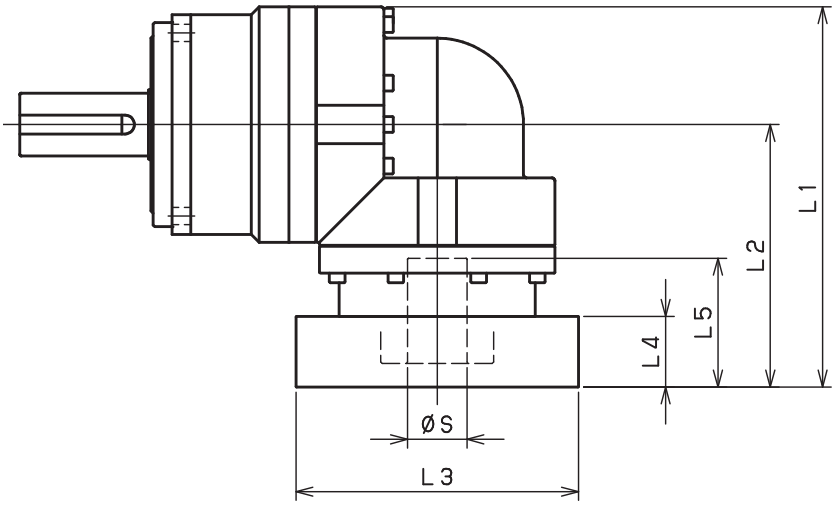

Model number	**: Adapter code	2-Stage				
		L1	L2	L3	L4	L5
EVB-060-□-□-8** (S≦8)	AA•AC•AD•AF•AG•AL•AM•AN•AQ	103	71.5	□52	15.5	32
	AB•AE•AH•AJ•AK	108	76.5	□52	20.5	37
	BA•BB•BD•BE•BG•BH•BJ	103	71.5	□60	15.5	32
	BC•BF	108	76.5	□60	20.5	37
	CA	108	76.5	□70	20.5	37
EVB-060-□-□-14** (8< S≦14)	BA•BB•BD•BE•BF•BG•BH•BJ•BK•BP	109	77.5	□65	16.5	35
	BC•BH•BM•BN	114	82.5	□65	21.5	40
	BL	119	87.5	□65	26.5	45
	CA•CC	109	77.5	□70	16.5	35
	CB	114	82.5	□70	21.5	40
	DA•DB•DC•DD•DF•DH•DJ	109	77.5	□80	16.5	35
	DE•DL	114	82.5	□80	21.5	40
	DG•DK	119	87.5	□80	26.5	45
	EA•EB•EC•EF•EG•EK•EL	109	77.5	□90	16.5	35
	EJ•EM	114	82.5	□90	21.5	40
	ED•EE•EH	119	87.5	□90	26.5	45
	FA	109	77.5	□100	16.5	35
	FB	119	87.5	□100	26.5	45
EVB-060-□-□-19** (14< S≦19)	DA•DB•DC	126	94.5	□80	25	50
	DD	136	104.5	□80	35	60
	DE	131	99.5	□80	30	55
	EA	131	99.5	□90	30	55
	EB•ED	126	94.5	□90	25	50
	EC	136	104.5	□90	35	60
	FA	126	94.5	□100	25	50
	FB	136	104.5	□100	35	60

*1) Double reduction : 1/3~ 1/10

*2) Bushing will be inserted to adapt to motor shaft

For an explanation on the Adapter Flange Code, please turn to page 422.

A more comprehensive adapter flange offering can be found using the NIDEC-SHIMPO Online Selector Tool. The variety is constantly expanding and being updated on the Selector Tool. If you have any questions or need any support, contact NIDEC-SHIMPO.

EVB-060 – 3-Stage Adapter Dimensions

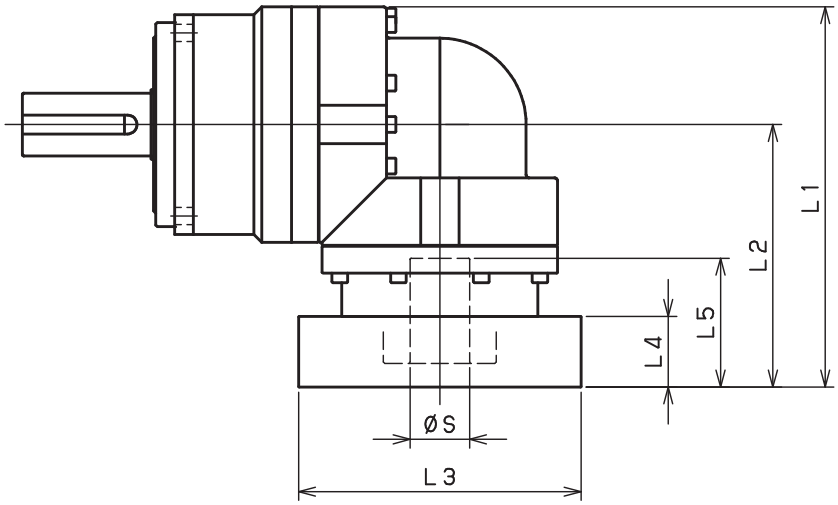

Model number	**: Adapter code	3-Stage				
		L1	L2	L3	L4	L5
EVB-060-□-□-8** (S≦ 8)	AA•AC•AD•AF•AG•AL•AM•AN•AQ	96	64.5	□52	15.5	32
	AB•AE•AH•AJ•AK	101	69.5	□52	20.5	37
	BA•BB•BD•BE•BG•BH•BJ	96	64.5	□60	15.5	32
	BC•BF	101	69.5	□60	20.5	37
	CA	101	69.5	□70	20.5	37
EVB-060-□-□-14** (8< S≦ 14)	BA•BB•BD•BE•BF•BG•BH•BJ•BK•BP	100	68.5	□65	16.5	35
	BC•BH•BM•BN	105	73.5	□65	21.5	40
	BL	110	78.5	□65	26.5	45
	CA•CC	100	68.5	□70	16.5	35
	CB	105	73.5	□70	21.5	40
	DA•DB•DC•DD•DF•DH•DJ	100	68.5	□80	16.5	35
	DE•DL	105	73.5	□80	21.5	40
	DG•DK	110	78.5	□80	26.5	45
	EA•EB•EC•EF•EG•EK•EL	100	68.5	□90	16.5	35
	EJ•EM	105	73.5	□90	21.5	40
	ED•EE•EH	110	78.5	□90	26.5	45
	FA	100	68.5	□100	16.5	35
	FB	110	78.5	□100	26.5	45
EVB-060-□-□-19** (14< S≦19)	DA•DB•DC	--	--	--	--	--
	DD	--	--	--	--	--
	DE	--	--	--	--	--
	EA	--	--	--	--	--
	EB•ED	--	--	--	--	--
	EC	--	--	--	--	--
	FA	--	--	--	--	--
	FB	--	--	--	--	--

*1) Triple reduction : 1/15~ 1/100

*2) Bushing will be inserted to adapt to motor shaft

For an explanation on the Adapter Flange Code, please turn to page 422.

A more comprehensive adapter flange offering can be found using the NIDEC-SHIMPO Online Selector Tool. The variety is constantly expanding and being updated on the Selector Tool. If you have any questions or need any support, contact NIDEC-SHIMPO.

EVB-090 – 2-Stage Specifications

Frame Size	**090**									
Stage	**2-Stage**									
Ratio	Unit	Note	3	4	5	6	7	8	9	10
Nominal Output Torque	[Nm]	*1	45	60	65	65	65	65	45	45
Maximum Acceleration Torque	[Nm]	*2	65	90	90	90	90	90	65	65
Emergency Stop Torque	[Nm]	*3	130	170	220	220	220	220	170	170
Nominal Input Speed	[rpm]	*4	3000							
Maximum Input Speed	[rpm]	*5	6000							
No Load Running Torque	[Nm]	*6	1.13							
Permitted Radial Load	[N]	*7	810	890	960	1000	1100	1100	1200	1200
Permitted Axial Load	[N]	*8	930	1100	1200	1300	1300	1400	1500	1600
Maximum Radial Load	[N]	*9	2400							
Maximum Axial Load	[N]	*10	2200							
Moment of Inertia (≤ Ø 8)	[kgcm2]	--	--	--	--	--	--	--	--	--
Moment of Inertia (≤ Ø 14)	[kgcm2]	--	2.120	1.890	1.800	1.760	1.730	1.710	1.700	1.690
Moment of Inertia (≤ Ø 19)	[kgcm2]	--	2.450	2.220	2.130	2.090	2.060	2.040	2.030	2.020
Moment of Inertia (≤ Ø 28)	[kgcm2]	--	4.570	4.350	4.260	4.210	4.180	4.170	4.160	4.150
Efficiency	[%]	*11	93							
Torsional Rigidity	[Nm/arc-min]	*12	10							
Maximum Torsional Backlash	[arc-min]	--	≤ 4							
Noise Level	[dB]	*13	80							
Protection Class	--	*14	IP54 (IP65)							
Ambient Temperature	[°C]	--	0-40							
Permitted Housing Temperature	[°C]	--	90							
Weight	[kg]	*15	5.1							

EVB-090 – 3-Stage Specifications

Frame Size	**090**									
Stage	**3-Stage**									
Ratio	Unit	Note	15	16	20	25	28	30	35	40
Nominal Output Torque	[Nm]	*1	45	65	65	65	65	45	65	65
Maximum Acceleration Torque	[Nm]	*2	65	110	110	110	110	65	110	110
Emergency Stop Torque	[Nm]	*3	170	220	220	220	220	170	220	220
Nominal Input Speed	[rpm]	*4	3000							
Maximum Input Speed	[rpm]	*5	6000							
No Load Running Torque	[Nm]	*6	0.55							
Permitted Radial Load	[N]	*7	1400	1400	1500	1600	1700	1700	1800	1900
Permitted Axial Load	[N]	*8	1900	1900	2100	2200	2200	2200	2200	2200
Maximum Radial Load	[N]	*9	2400							
Maximum Axial Load	[N]	*10	2200							
Moment of Inertia (≤ Ø 8)	[kgcm2]	--	0.340	0.380	0.330	0.320	0.370	0.250	0.320	0.250
Moment of Inertia (≤ Ø 14)	[kgcm2]	--	0.410	0.460	0.400	0.400	0.450	0.330	0.400	0.320
Moment of Inertia (≤ Ø 19)	[kgcm2]	--	0.600	0.650	0.590	0.590	0.640	0.510	0.590	0.510
Moment of Inertia (≤ Ø 28)	[kgcm2]	--	--	--	--	--	--	--	--	--
Efficiency	[%]	*11	88							
Torsional Rigidity	[Nm/arc-min]	*12	10							
Maximum Torsional Backlash	[arc-min]	--	≤ 7							
Noise Level	[dB]	*13	80							
Protection Class	--	*14	IP54 (IP65)							
Ambient Temperature	[°C]	--	0-40							
Permitted Housing Temperature	[°C]	--	90							
Weight	[kg]	*15	4.4							

EVB-090 – 3-Stage Specifications

Frame Size	090								
Stage	**3-Stage**								
Ratio	Unit	Note	45	50	60	70	80	90	100
Nominal Output Torque	[Nm]	*1	45	65	65	65	65	45	45
Maximum Acceleration Torque	[Nm]	*2	65	110	110	110	110	65	65
Emergency Stop Torque	[Nm]	*3	170	220	220	220	220	170	170
Nominal Input Speed	[rpm]	*4	3000						
Maximum Input Speed	[rpm]	*5	6000						
No Load Running Torque	[Nm]	*6	0.55						
Permitted Radial Load	[N]	*7	2000	2100	2200	2300	2400	2400	2400
Permitted Axial Load	[N]	*8	2200	2200	2200	2200	2200	2200	2200
Maximum Radial Load	[N]	*9	2400						
Maximum Axial Load	[N]	*10	2200						
Moment of Inertia (≤ Ø 8)	[kgcm2]	--	0.320	0.250	0.250	0.250	0.250	0.250	0.250
Moment of Inertia (≤ Ø 14)	[kgcm2]	--	0.390	0.320	0.320	0.320	0.320	0.320	0.320
Moment of Inertia (≤ Ø 19)	[kgcm2]	--	0.580	0.510	0.510	0.510	0.510	0.510	0.510
Moment of Inertia (≤ Ø 28)	[kgcm2]	--	--	--	--	--	--	--	--
Efficiency	[%]	*11	88						
Torsional Rigidity	[Nm/arc-min]	*12	10						
Maximum Torsional Backlash	[arc-min]	--	≤ 7						
Noise Level	[dB]	*13	80						
Protection Class	--	*14	IP54 (IP65)						
Ambient Temperature	[°C]	--	0-40						
Permitted Housing Temperature	[°C]	--	90						
Weight	[kg]	*15	4.4						

*1) At nominal input speed, service life is 20,000 hours
*2) The maximum torque when starting or stopping operation
*3) The maximum torque allowed under a stress situation (Permitted 1,000 times during service life)
*4) The average input speed
*5) The maximum intermittent input speed
*6) This is the torque at no load applied on the input shaft. The input speed is 3000 rpm for EVB090
*7) At this load and nominal input speed, service life will be 20,000 hours. (The radial load applied to the output side bearing)
*8) At this load and nominal input speed, service life will be 20,000 hours. (The axial load applied to the output shaft center)
*9) The maximum radial load that the reducer can accept
*10) The maximum axial load that the reducer can accept
*11) The efficiency at the nominal torque rating
*12) This does not include the lost motion
*13) Contact NIDEC-SHIMPO for the testing conditions and environment
*14) IP65 (wash-down) is available as an option. Contact NIDEC-SHIMPO for more details and our food grade options
*15) The weight may vary slightly between models

EVB-090 – 2-Stage Dimensions

Input shaft bore ≦φ14

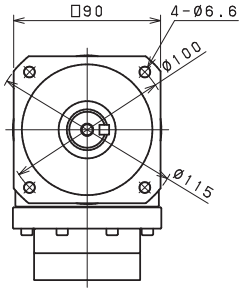

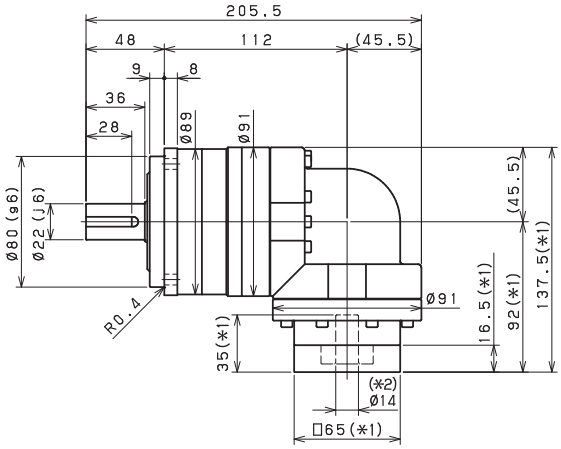

Input shaft bore ≦φ19

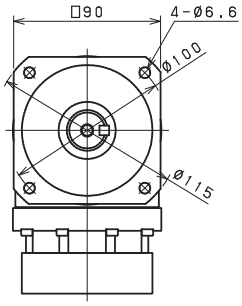

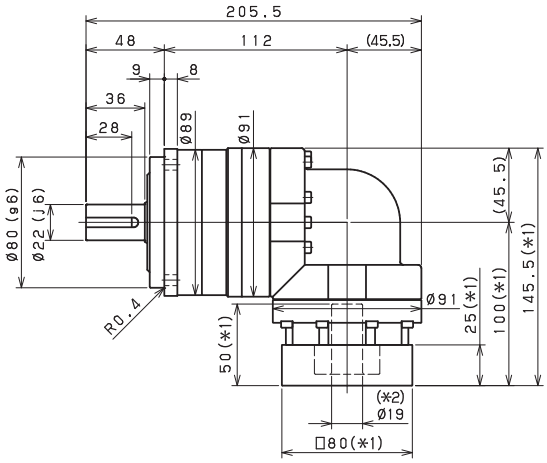

Input shaft bore ≦φ28

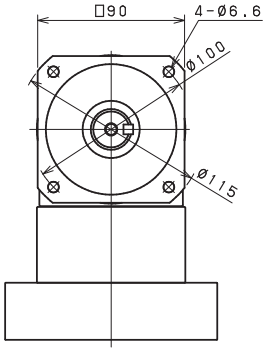

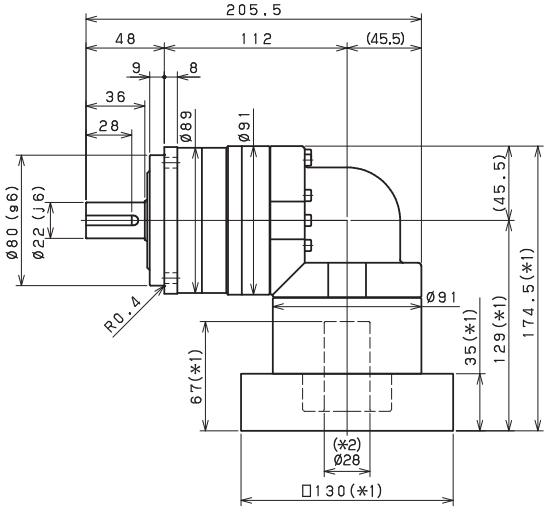

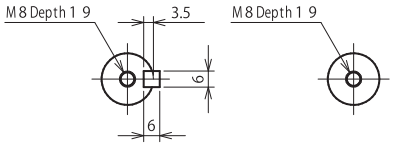

Shaft with key　　Smooth shaft

*1) Length will vary depending on motor

*2) Bushing will be inserted to adapt to motor shaft

EVB-090 – 3-Stage Dimensions

Input shaft bore ≦φ8

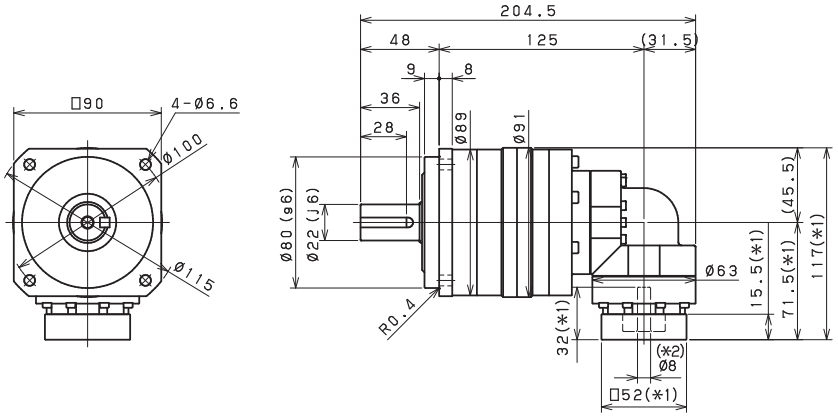

Input shaft bore ≦φ14

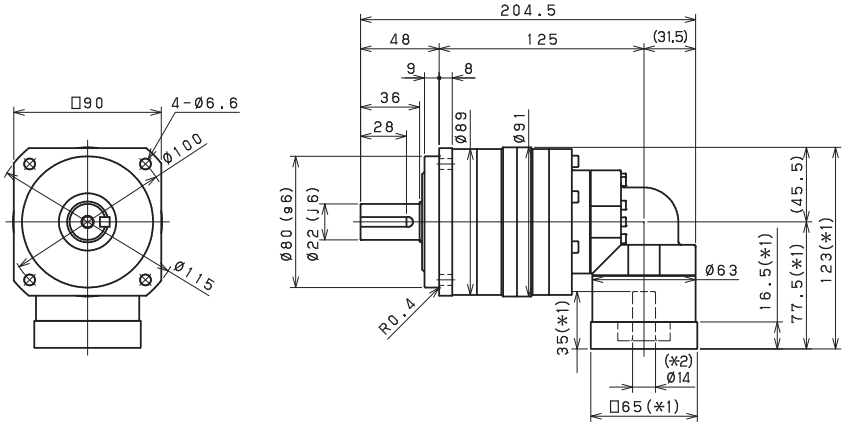

Input shaft bore ≦φ19

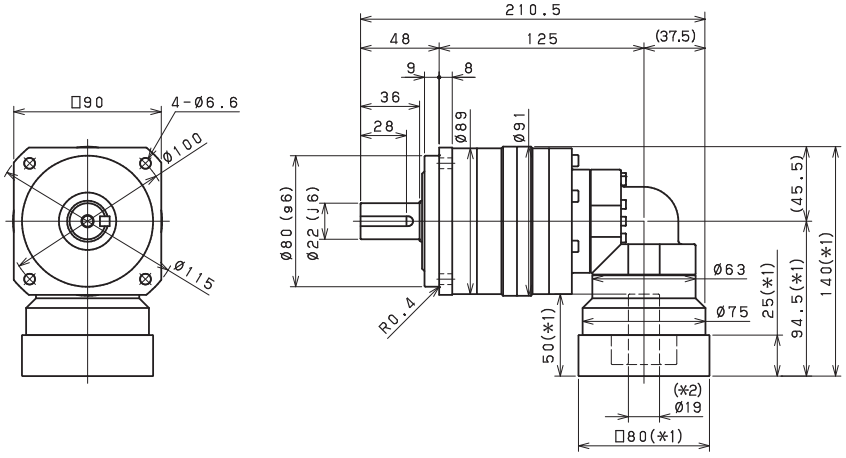

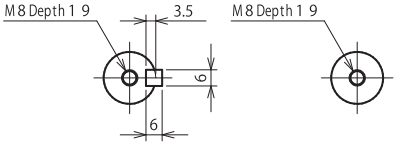

Shaft with key　　Smooth shaft

*1) Length will vary depending on motor

*2) Bushing will be inserted to adapt to motor shaft

EVB-090 – 2-Stage Adapter Dimensions

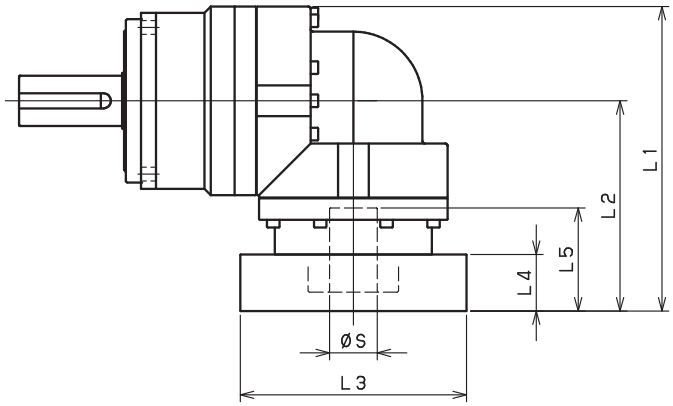

Model number	**: Adapter code	2-Stage				
		L1	L2	L3	L4	L5
EVB-090-□-□-8** (S≦ 8)	AA•AC•AD•AF•AG•AL•AM•AN•AQ	--	--	--	--	--
	AB•AE•AH•AJ•AK	--	--	--	--	--
	BA•BB•BD•BE•BG•BH•BJ	--	--	--	--	--
	CA	--	--	--	--	--
EVB-090-□-□-14** (8< S≦ 14)	BA•BB•BD•BE•BF•BG•BH•BJ•BK•BP	137.5	92	□65	16.5	35
	BC•BH•BM•BN	142.5	97	□65	21.5	40
	CA•CC	137.5	92	□70	16.5	35
	DA•DB•DC•DD•DF•DH•DJ	137.5	92	□80	16.5	35
	EA•EB•EC•EF•EG•EK•EL	137.5	92	□90	16.5	35
	FA	137.5	92	□100	16.5	35
	FB	147.5	102	□100	26.5	45
	JA	152.5	107	□150	31.5	50
EVB-090-□-□-19** (14< S≦ 19)	DA•DB•DC	145.5	100	□80	25	50
	EB•ED	145.5	100	□90	25	50
	FA	145.5	100	□100	25	50
	FB	155.5	110	□100	35	60
	GA•GC•GH	150.5	105	□115	30	55
	GB•GD•GJ	145.5	100	□115	25	50
	GE•GF	155.5	110	□115	35	60
	HA	145.5	100	□130	25	50
	HB	160.5	115	□130	40	65
	HC•HD•HE	150.5	105	□130	30	55
	JA	155.5	110	□150	35	60
	JB	160.5	115	□150	40	65
EVB-090-□-□-28** (19< S≦ 28)	FA•FB•FC	174.5	129	□100	35	67
	FD•FE	169.5	124	□100	30	62
	GA•GB•GC•GD•GE•GF•GG•GH	174.5	129	□115	35	67
	HA•HC•HD	174.5	129	□130	35	67
	HB	184.5	139	□130	45	77
	HE	189.5	144	□130	50	82
	HF	169.5	124	□130	30	62
	JA•JB•JC•JF	174.5	129	□150	35	67
	JD	194.5	149	□150	55	87
	JE	184.5	139	□150	45	77

*1) Double reduction : 1/3~ 1/10 *2) Bushing will be inserted to adapt to motor shaft

For an explanation on the Adapter Flange Code, please turn to page 422.

A more comprehensive adapter flange offering can be found using the NIDEC-SHIMPO Online Selector Tool. The variety is constantly expanding and being updated on the Selector Tool. If you have any questions or need any support, contact NIDEC-SHIMPO.

EVB-090 – 3-Stage Adapter Dimensions

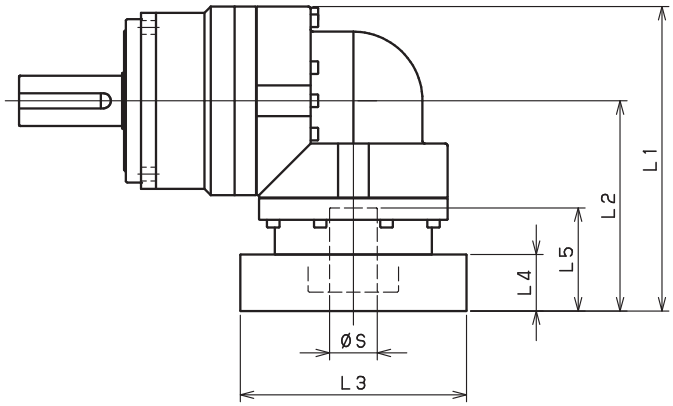

Model number	**: Adapter code	3-Stage				
		L1	L2	L3	L4	L5
EVB-090-□-□-8** (S≦ 8)	AA•AC•AD•AF•AG•AL•AM•AN•AQ	117	71.5	□52	15.5	32
	AB•AE•AH•AJ•AK	122	76.5	□52	20.5	37
	BA•BB•BD•BE•BG•BH•BJ	117	71.5	□60	15.5	32
	CA	122	76.5	□70	20.5	37
EVB-090-□-□-14** (8< S≦ 14)	BA•BB•BD•BE•BF•BG•BH•BJ•BK•BP	123	77.5	□65	16.5	35
	BC•BH•BM•BN	128	82.5	□65	21.5	40
	CA•CC	123	77.5	□70	16.5	35
	DA•DB•DC•DD•DF•DH•DJ	123	77.5	□80	16.5	35
	EA•EB•EC•EF•EG•EK•EL	123	77.5	□90	16.5	35
	FA	123	77.5	□100	16.5	35
	FB	133	87.5	□100	26.5	45
	JA	138	92.5	□150	31.5	50
EVB-090-□-□-19** (14< S≦ 19)	DA•DB•DC	140	94.5	□80	25	50
	EB•ED	140	94.5	□90	25	50
	FA	140	94.5	□100	25	50
	FB	150	104.5	□100	35	60
	GA•GC•GH	145	99.5	□115	30	55
	GB•GD•GJ	140	94.5	□115	25	50
	GE•GF	150	104.5	□115	35	60
	HA	140	94.5	□130	25	50
	HB	155	109.5	□130	40	65
	HC•HD•HE	145	99.5	□130	30	55
	JA	150	104.5	□150	35	60
	JB	155	109.5	□150	40	65
EVB-090-□-□-28** (19< S≦ 28)	FA•FB•FC	--	--	--	--	--
	FD•FE	--	--	--	--	--
	GA•GB•GC•GD•GE•GF•GG•GH	--	--	--	--	--
	HA•HC•HD	--	--	--	--	--
	HB	--	--	--	--	--
	HE	--	--	--	--	--
	HF	--	--	--	--	--
	JA•JB•JC•JF	--	--	--	--	--
	JD	--	--	--	--	--
	JE	--	--	--	--	--

*1) Triple reduction : 1/15~ 1/100 *2) Bushing will be inserted to adapt to motor shaft

For an explanation on the Adapter Flange Code, please turn to page 422.

A more comprehensive adapter flange offering can be found using the NIDEC-SHIMPO Online Selector Tool. The variety is constantly expanding and being updated on the Selector Tool. If you have any questions or need any support, contact NIDEC-SHIMPO.

EVB-115 – 2-Stage Specifications

Frame Size	**115**									
Stage	**2-Stage**									
Ratio	Unit	Note	3	4	5	6	7	8	9	10
Nominal Output Torque	[Nm]	*1	75	100	120	150	150	150	110	110
Maximum Acceleration Torque	[Nm]	*2	150	200	240	300	300	300	200	200
Emergency Stop Torque	[Nm]	*3	320	430	500	550	550	550	450	450
Nominal Input Speed	[rpm]	*4	3000							
Maximum Input Speed	[rpm]	*5	6000							
No Load Running Torque	[Nm]	*6	1.88							
Permitted Radial Load	[N]	*7	1300	1500	1600	1700	1800	1900	1900	2000
Permitted Axial Load	[N]	*8	1500	1700	1900	2000	2100	2300	2400	2500
Maximum Radial Load	[N]	*9	4300							
Maximum Axial Load	[N]	*10	3900							
Moment of Inertia (≤ Ø 14)	[kgcm2]	--	--	--	--	--	--	--	--	--
Moment of Inertia (≤ Ø 19)	[kgcm2]	--	6.740	5.490	5.020	4.770	4.650	4.550	4.490	4.460
Moment of Inertia (≤ Ø 28)	[kgcm2]	--	8.340	7.080	6.610	6.360	6.240	6.140	6.080	6.050
Moment of Inertia (≤ Ø 38)	[kgcm2]	--	15.410	14.150	13.690	13.430	13.310	13.220	13.160	13.120
Efficiency	[%]	*11	93							
Torsional Rigidity	[Nm/arc-min]	*12	31							
Maximum Torsional Backlash	[arc-min]	--	≤ 4							
Noise Level	[dB]	*13	85							
Protection Class	--	*14	IP54 (IP65)							
Ambient Temperature	[°C]	--	0-40							
Permitted Housing Temperature	[°C]	--	90							
Weight	[kg]	*15	10.4							

EVB-115 – 3-Stage Specifications

Frame Size	**115**									
Stage	**3-Stage**									
Ratio	Unit	Note	15	16	20	25	28	30	35	40
Nominal Output Torque	[Nm]	*1	110	130	150	150	150	110	150	150
Maximum Acceleration Torque	[Nm]	*2	200	260	300	300	300	200	300	300
Emergency Stop Torque	[Nm]	*3	450	550	550	550	550	450	550	550
Nominal Input Speed	[rpm]	*4	3000							
Maximum Input Speed	[rpm]	*5	6000							
No Load Running Torque	[Nm]	*6	1.11							
Permitted Radial Load	[N]	*7	2300	2300	2500	2700	2800	2900	3000	3200
Permitted Axial Load	[N]	*8	3000	3100	3400	3700	3900	3900	3900	3900
Maximum Radial Load	[N]	*9	3900							
Maximum Axial Load	[N]	*10	3900							
Moment of Inertia (≤ Ø 14)	[kgcm2]	--	2.250	2.460	2.200	2.180	2.400	1.870	2.160	1.860
Moment of Inertia (≤ Ø 19)	[kgcm2]	--	2.580	2.790	2.530	2.510	2.730	2.200	2.490	2.190
Moment of Inertia (≤ Ø 28)	[kgcm2]	--	4.700	4.910	4.650	4.640	4.860	4.330	4.620	4.320
Moment of Inertia (≤ Ø 38)	[kgcm2]	--	--	--	--	--	--	--	--	--
Efficiency	[%]	*11	88							
Torsional Rigidity	[Nm/arc-min]	*12	31							
Maximum Torsional Backlash	[arc-min]	--	≤ 7							
Noise Level	[dB]	*13	85							
Protection Class	--	*14	IP54 (IP65)							
Ambient Temperature	[°C]	--	0-40							
Permitted Housing Temperature	[°C]	--	90							
Weight	[kg]	*15	10.1							

EVB-115 – 3-Stage Specifications

Frame Size	115								
Stage	**3-Stage**								
Ratio	Unit	Note	45	50	60	70	80	90	100
Nominal Output Torque	[Nm]	*1	110	150	150	150	150	110	110
Maximum Acceleration Torque	[Nm]	*2	200	300	300	300	300	200	200
Emergency Stop Torque	[Nm]	*3	450	550	550	550	550	450	450
Nominal Input Speed	[rpm]	*4	3000						
Maximum Input Speed	[rpm]	*5	6000						
No Load Running Torque	[Nm]	*6	1.11						
Permitted Radial Load	[N]	*7	3300	3400	3600	3800	4000	4200	4300
Permitted Axial Load	[N]	*8	3900	3900	3900	3900	3900	3900	3900
Maximum Radial Load	[N]	*9	4300						
Maximum Axial Load	[N]	*10	3900						
Moment of Inertia (≤ Ø 14)	[kgcm2]	--	2.150	1.860	1.850	1.850	1.850	1.850	1.850
Moment of Inertia (≤ Ø 19)	[kgcm2]	--	2.480	2.190	2.180	2.180	2.180	2.180	2.180
Moment of Inertia (≤ Ø 28)	[kgcm2]	--	4.610	4.310	4.310	4.310	4.310	4.310	4.310
Moment of Inertia (≤ Ø 38)	[kgcm2]	--	--	--	--	--	--	--	--
Efficiency	[%]	*11	88						
Torsional Rigidity	[Nm/arc-min]	*12	31						
Maximum Torsional Backlash	[arc-min]	--	≤ 7						
Noise Level	[dB]	*13	85						
Protection Class	--	*14	IP54 (IP65)						
Ambient Temperature	[°C]	--	0-40						
Permitted Housing Temperature	[°C]	--	90						
Weight	[kg]	*15	10.1						

*1) At nominal input speed, service life is 20,000 hours
*2) The maximum torque when starting or stopping operation
*3) The maximum torque allowed under a stress situation (Permitted 1,000 times during service life)
*4) The average input speed
*5) The maximum intermittent input speed
*6) This is the torque at no load applied on the input shaft. The input speed is 3000 rpm for EVB115
*7) At this load and nominal input speed, service life will be 20,000 hours. (The radial load applied to the output side bearing)
*8) At this load and nominal input speed, service life will be 20,000 hours. (The axial load applied to the output shaft center)
*9) The maximum radial load that the reducer can accept
*10) The maximum axial load that the reducer can accept
*11) The efficiency at the nominal torque rating
*12) This does not include the lost motion
*13) Contact NIDEC-SHIMPO for the testing conditions and environment
*14) IP65 (wash-down) is available as an option. Contact NIDEC-SHIMPO for more details and our food grade options
*15) The weight may vary slightly between models

EVB-115 – 2-Stage Dimensions

Input shaft bore ≦φ19

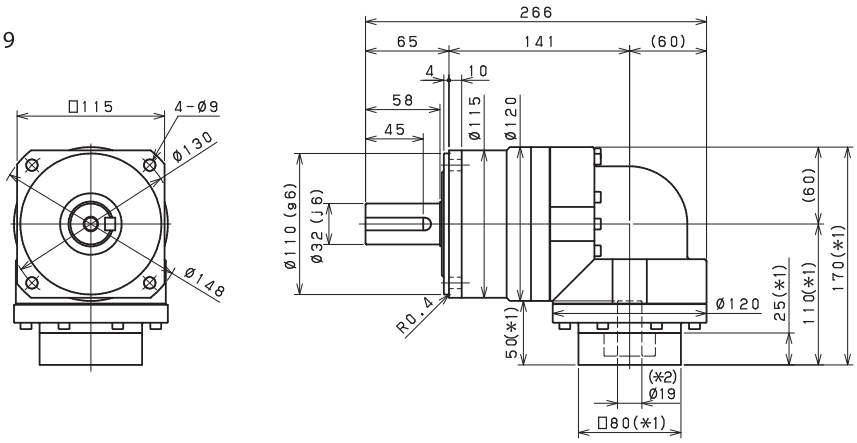

Input shaft bore ≦φ28

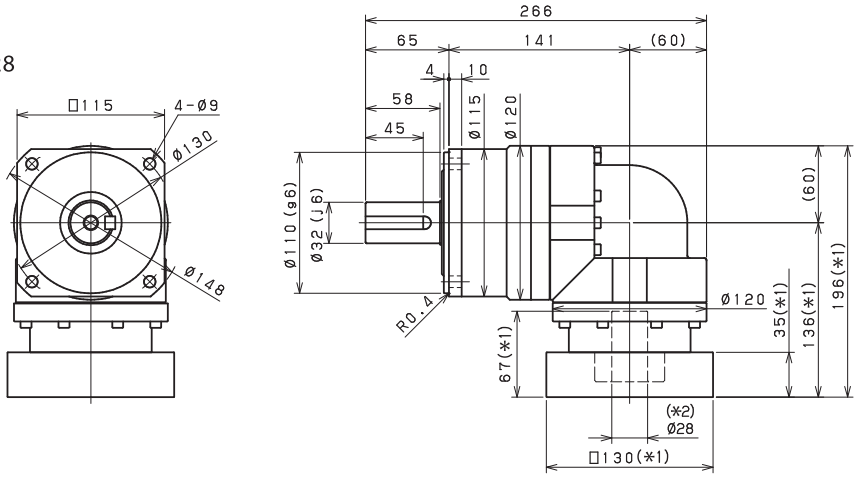

Input shaft bore ≦φ38

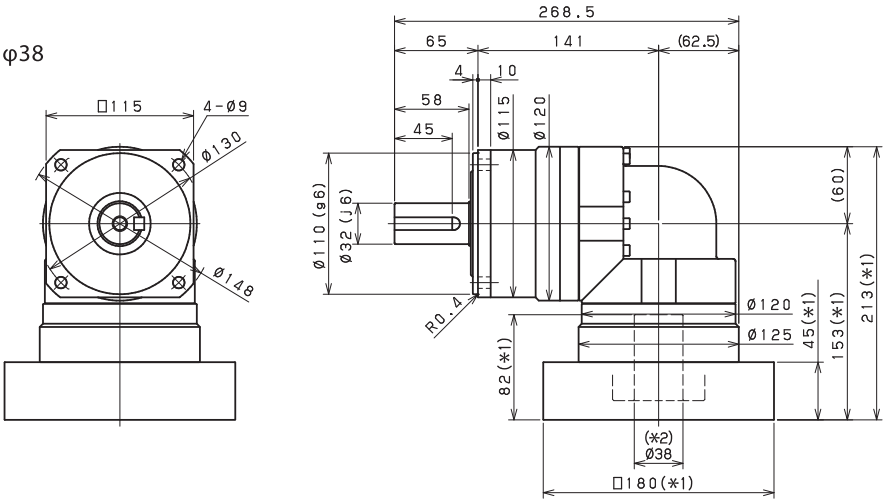

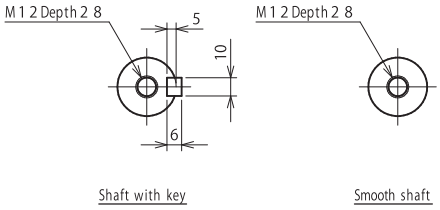

*1) Length will vary depending on motor

*2) Bushing will be inserted to adapt to motor shaft

EVB-115 – 3-Stage Dimensions

Input shaft bore ≦φ14

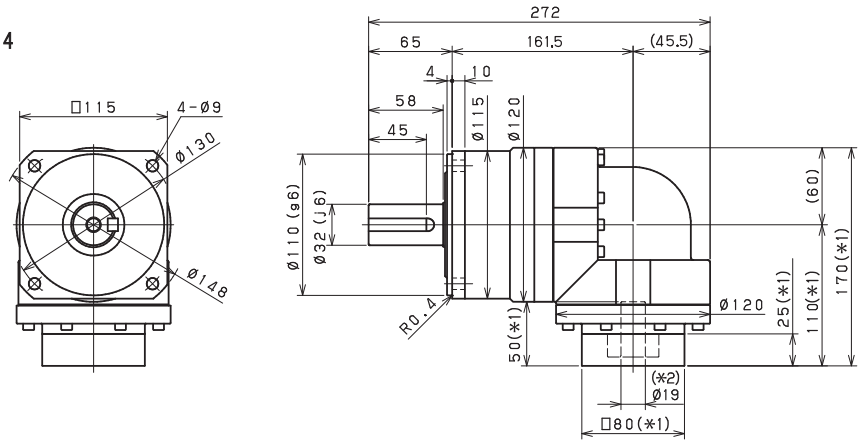

Input shaft bore ≦φ19

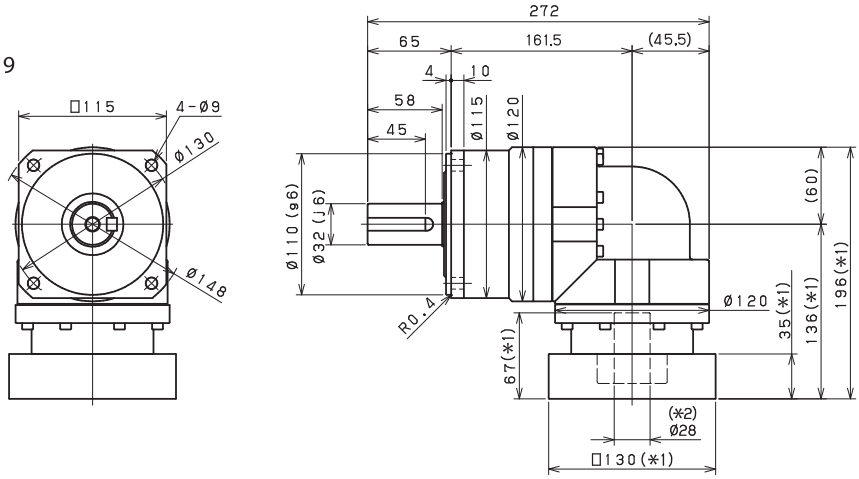

Input shaft bore ≦φ28

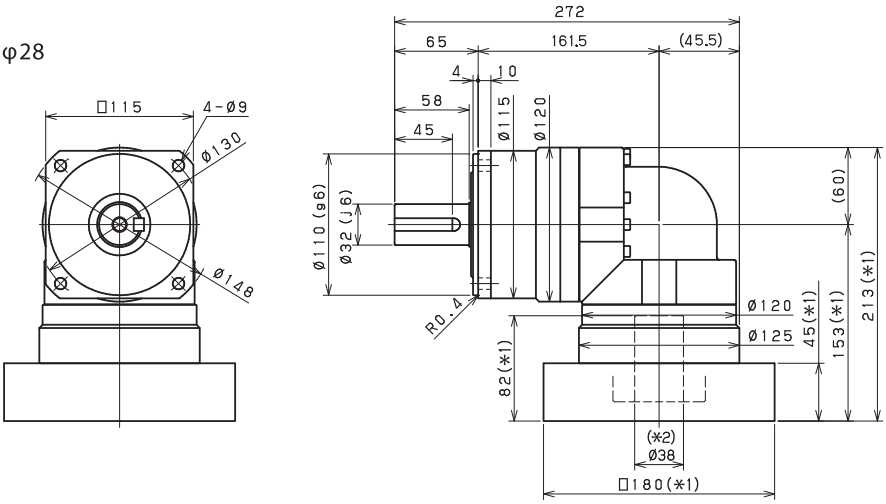

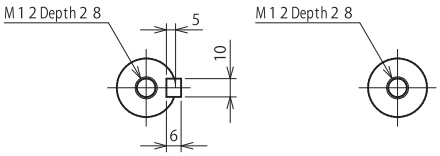

Shaft with key　　Smooth shaft

*1) Length will vary depending on motor

*2) Bushing will be inserted to adapt to motor shaft

EVB-115 – 2-Stage Adapter Dimensions

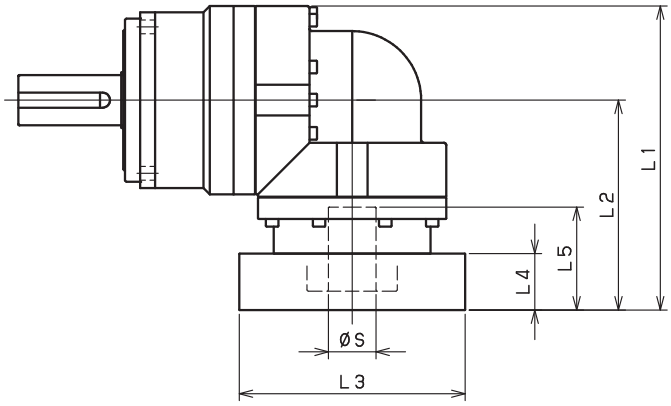

Model number	**: Adapter code	2-Stage				
		L1	L2	L3	L4	L5
EVB-115-□-□-14** (S≦ 14)	BA•BB•BD•BE•BF•BG•BH•BJ•BK•BP	--	--	--	--	--
	BC•BH•BM•BN	--	--	--	--	--
	CA•CC	--	--	--	--	--
	DA•DB•DC•DD•DF•DH•DJ	--	--	--	--	--
	EA•EB•EC•EF•EG•EK•EL	--	--	--	--	--
	FA	--	--	--	--	--
	FB	--	--	--	--	--
	JA	--	--	--	--	--
EVB-115-□-□-19** (14< S≦ 19)	DA•DB•DC	170	110	□80	25	50
	EB•ED	170	110	□90	25	50
	FA	170	110	□100	25	50
	FB	180	120	□100	35	60
	GB•GD•GJ	170	110	□115	25	50
	HA	170	110	□130	25	50
	HB	185	125	□130	40	65
	JA	180	120	□150	35	60
EVB-115-□-□-28** (19< S≦ 28)	FA•FB•FC	196	136	□100	35	67
	FD•FE	191	131	□100	30	62
	GA•GB•GC•GD•GE•GF•GG•GH	196	136	□115	35	67
	HA•HC•HD	196	136	□130	35	67
	HB	206	146	□130	45	77
	HE	211	151	□130	50	82
	HF	191	131	□130	30	62
	JA•JB•JC•JF	196	136	□150	35	67
	JD	216	156	□150	55	87
	JE	206	146	□150	45	77
	KA•KB•KE	196	136	□180	35	67
	KD	206	146	□180	45	77
EVB-115-□-□-38** (28< S≦ 38)	HA	213	153	□130	45	82
	HB•HE	208	148	□130	40	77
	JA	213	153	□150	45	82
	KA•KB•KC	213	153	□180	45	82
	KD	248	188	□180	80	117
	KE	228	168	□180	60	97

*1) Double reduction : 1/3~ 1/10 *2) Bushing will be inserted to adapt to motor shaft

For an explanation on the Adapter Flange Code, please turn to page 422.

A more comprehensive adapter flange offering can be found using the NIDEC-SHIMPO Online Selector Tool. The variety is constantly expanding and being updated on the Selector Tool. If you have any questions or need any support, contact NIDEC-SHIMPO.

EVB-115 – 3-Stage Adapter Dimensions

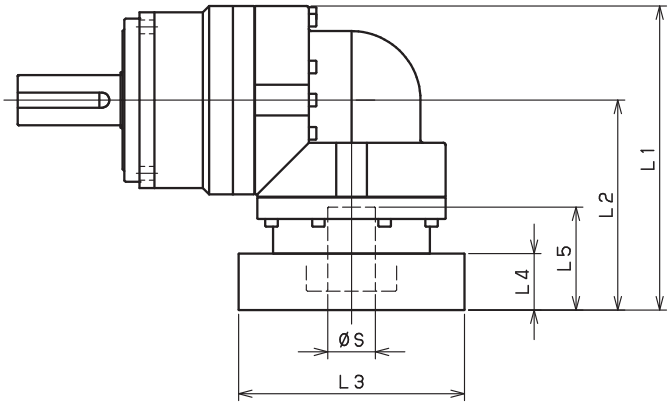

Model number	**: Adapter code	3-Stage				
		L1	L2	L3	L4	L5
EVB-115-□-□-14** (S≦ 14)	BA•BB•BD•BE•BF•BG•BH•BJ•BK•BP	152	92	□65	16.5	35
	BC•BH•BM•BN	157	97	□65	21.5	40
	CA•CC	152	92	□70	16.5	35
	DA•DB•DC•DD•DF•DH•DJ	152	92	□80	16.5	35
	EA•EB•EC•EF•EG•EK•EL	152	92	□90	16.5	35
	FA	152	92	□100	16.5	35
	FB	162	102	□100	26.5	45
	JA	167	107	□150	31.5	50
EVB-115-□-□-19** (14< S≦ 19)	DA•DB•DC	160	100	□80	25	50
	EB•ED	160	100	□90	25	50
	FA	160	100	□100	25	50
	FB	170	110	□100	35	60
	GB•GD•GJ	160	100	□115	25	50
	HA	160	100	□130	25	50
	HB	175	115	□130	40	65
	JA	170	110	□150	35	60
EVB-115-□-□-28** (19< S≦ 28)	FA•FB•FC	189	129	□100	35	67
	FD•FE	184	124	□100	30	62
	GA•GB•GC•GD•GE•GF•GG•GH	189	129	□115	35	67
	HA•HC•HD	189	129	□130	35	67
	HB	199	139	□130	45	77
	HE	204	144	□130	50	82
	HF	184	124	□130	30	62
	JA•JB•JC•JF	189	129	□150	35	67
	JD	209	149	□150	55	87
	JE	199	139	□150	45	77
	KA•KB•KE	189	129	□180	35	67
	KD	199	139	□180	45	77
EVB-115-□-□-38** (28< S≦ 38)	HA	--	--	--	--	--
	HB•HE	--	--	--	--	--
	JA	--	--	--	--	--
	KA•KB•KC	--	--	--	--	--
	KD	--	--	--	--	--
	KE	--	--	--	--	--

*1) Triple reduction : 1/15~ 1/100 *2) Bushing will be inserted to adapt to motor shaft

For an explanation on the Adapter Flange Code, please turn to page 422.

A more comprehensive adapter flange offering can be found using the NIDEC-SHIMPO Online Selector Tool. The variety is constantly expanding and being updated on the Selector Tool. If you have any questions or need any support, contact NIDEC-SHIMPO.

EVB-140 – 2-Stage Specifications

Frame Size	**140**									
Stage	**2-Stage**									
Ratio	Unit	Note	3	4	5	6	7	8	9	10
Nominal Output Torque	[Nm]	*1	130	170	200	260	300	300	200	200
Maximum Acceleration Torque	[Nm]	*2	260	340	400	520	600	600	400	400
Emergency Stop Torque	[Nm]	*3	700	950	1100	1100	1100	1100	750	750
Nominal Input Speed	[rpm]	*4	2000							
Maximum Input Speed	[rpm]	*5	4000							
No Load Running Torque	[Nm]	*6	3.26							
Permitted Radial Load	[N]	*7	3200	3500	3800	4000	4200	4400	4600	4700
Permitted Axial Load	[N]	*8	2400	2700	3000	3300	3500	3700	3900	4100
Maximum Radial Load	[N]	*9	9100							
Maximum Axial Load	[N]	*10	8200							
Moment of Inertia (≤ Ø 19)	[kgcm2]	--	--	--	--	--	--	--	--	--
Moment of Inertia (≤ Ø 28)	[kgcm2]	--	23.130	18.570	16.910	16.010	15.580	15.230	14.770	14.660
Moment of Inertia (≤ Ø 38)	[kgcm2]	--	27.500	22.940	21.280	20.380	19.950	19.610	19.410	19.030
Moment of Inertia (≤ Ø 48)	[kgcm2]	--	40.730	36.170	34.510	33.610	33.180	32.840	32.370	32.260
Efficiency	[%]	*11	93							
Torsional Rigidity	[Nm/arc-min]	*12	60							
Maximum Torsional Backlash	[arc-min]	--	≤ 4							
Noise Level	[dB]	*13	85							
Protection Class	--	*14	IP54 (IP65)							
Ambient Temperature	[°C]	--	0-40							
Permitted Housing Temperature	[°C]	--	90							
Weight	[kg]	*15	19.1							

EVB-140 – 3-Stage Specifications

Frame Size	**140**									
Stage	**3-Stage**									
Ratio	Unit	Note	15	16	20	25	28	30	35	40
Nominal Output Torque	[Nm]	*1	200	300	300	300	300	200	300	300
Maximum Acceleration Torque	[Nm]	*2	400	600	600	600	600	400	600	600
Emergency Stop Torque	[Nm]	*3	750	1100	1100	1100	1100	750	1100	1100
Nominal Input Speed	[rpm]	*4	2000							
Maximum Input Speed	[rpm]	*5	4000							
No Load Running Torque	[Nm]	*6	2.56							
Permitted Radial Load	[N]	*7	5400	5500	6000	6400	6700	6800	7200	7500
Permitted Axial Load	[N]	*8	4900	5000	5500	6100	6400	6600	7000	7500
Maximum Radial Load	[N]	*9	9100							
Maximum Axial Load	[N]	*10	8200							
Moment of Inertia (≤ Ø 19)	[kgcm2]	--	6.400	7.290	6.220	6.150	7.090	4.990	6.090	4.950
Moment of Inertia (≤ Ø 28)	[kgcm2]	--	8.000	8.880	7.810	7.750	8.680	6.580	7.690	6.540
Moment of Inertia (≤ Ø 38)	[kgcm2]	--	15.070	15.960	14.890	14.820	15.760	13.660	14.760	13.610
Moment of Inertia (≤ Ø 48)	[kgcm2]	--	--	--	--	--	--	--	--	--
Efficiency	[%]	*11	88							
Torsional Rigidity	[Nm/arc-min]	*12	60							
Maximum Torsional Backlash	[arc-min]	--	≤ 7							
Noise Level	[dB]	*13	85							
Protection Class	--	*14	IP54 (IP65)							
Ambient Temperature	[°C]	--	0-40							
Permitted Housing Temperature	[°C]	--	90							
Weight	[kg]	*15	19.6							

EVB-140 – 3-Stage Specifications

Frame Size	**140**								
Stage	**3-Stage**								
Ratio	Unit	Note	45	50	60	70	80	90	100
Nominal Output Torque	[Nm]	*1	200	300	300	300	300	200	200
Maximum Acceleration Torque	[Nm]	*2	400	600	600	600	600	400	400
Emergency Stop Torque	[Nm]	*3	750	1100	1100	1100	1100	750	750
Nominal Input Speed	[rpm]	*4	2000						
Maximum Input Speed	[rpm]	*5	4000						
No Load Running Torque	[Nm]	*6	2.56						
Permitted Radial Load	[N]	*7	7800	8100	8600	9100	9100	9100	9100
Permitted Axial Load	[N]	*8	7900	8200	8200	8200	8200	8200	8200
Maximum Radial Load	[N]	*9	9100						
Maximum Axial Load	[N]	*10	8200						
Moment of Inertia (≤ Ø 19)	[kgcm2]	--	6.070	4.930	4.920	4.910	4.910	4.910	4.910
Moment of Inertia (≤ Ø 28)	[kgcm2]	--	7.660	6.520	6.510	6.510	6.500	6.500	6.500
Moment of Inertia (≤ Ø 38)	[kgcm2]	--	14.740	13.590	13.590	13.580	13.580	13.570	13.570
Moment of Inertia (≤ Ø 48)	[kgcm2]	--	--	--	--	--	--	--	--
Efficiency	[%]	*11	88						
Torsional Rigidity	[Nm/arc-min]	*12	60						
Maximum Torsional Backlash	[arc-min]	--	≤ 7						
Noise Level	[dB]	*13	85						
Protection Class	--	*14	IP54 (IP65)						
Ambient Temperature	[°C]	--	0-40						
Permitted Housing Temperature	[°C]	--	90						
Weight	[kg]	*15	19.6						

*1) At nominal input speed, service life is 20,000 hours
*2) The maximum torque when starting or stopping operation
*3) The maximum torque allowed under a stress situation (Permitted 1,000 times during service life)
*4) The average input speed
*5) The maximum intermittent input speed
*6) This is the torque at no load applied on the input shaft. The input speed is 2000 rpm for EVB140
*7) At this load and nominal input speed, service life will be 20,000 hours. (The radial load applied to the output side bearing)
*8) At this load and nominal input speed, service life will be 20,000 hours. (The axial load applied to the output shaft center)
*9) The maximum radial load that the reducer can accept
*10) The maximum axial load that the reducer can accept
*11) The efficiency at the nominal torque rating
*12) This does not include the lost motion
*13) Contact NIDEC-SHIMPO for the testing conditions and environment
*14) IP65 (wash-down) is available as an option. Contact NIDEC-SHIMPO for more details and our food grade options
*15) The weight may vary slightly between models

EVB-140 – 2-Stage Dimensions

Input shaft bore ≦φ28

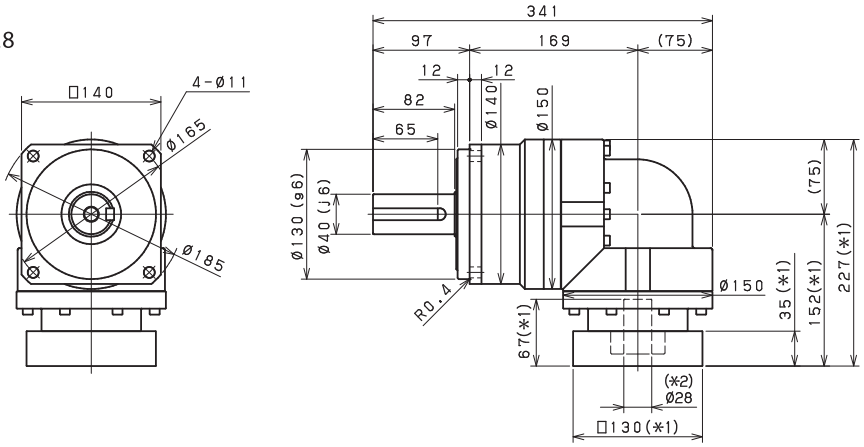

Input shaft bore ≦φ38

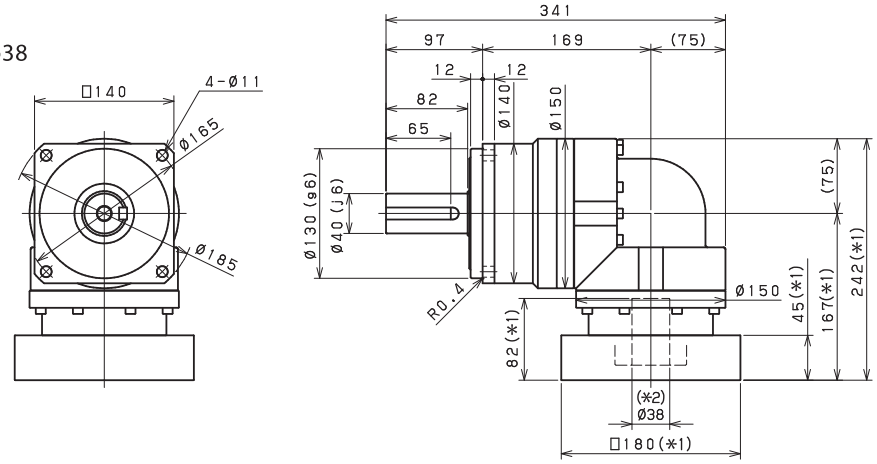

Input shaft bore ≦φ48

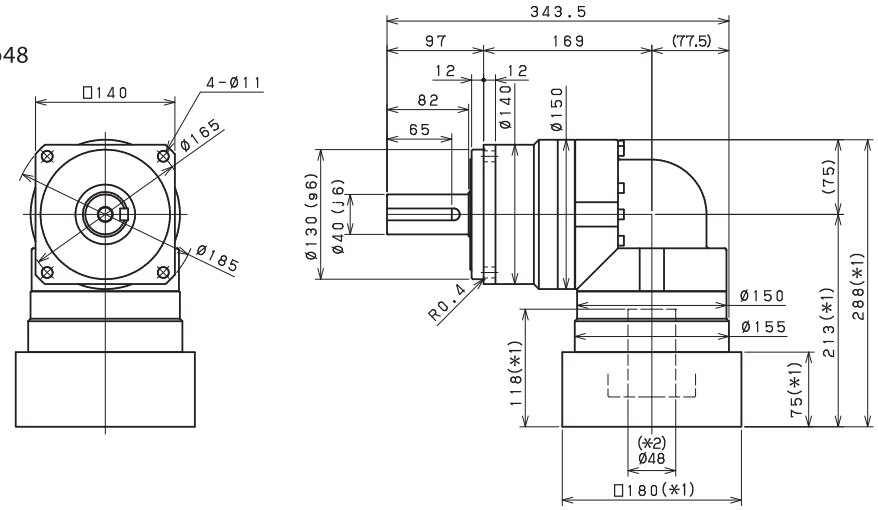

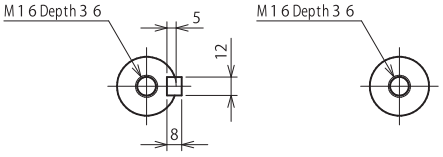

Shaft with key　　Smooth shaft

*1) Length will vary depending on motor

*2) Bushing will be inserted to adapt to motor shaft

EVB-140 – 3-Stage Dimensions

Input shaft bore ≦φ19

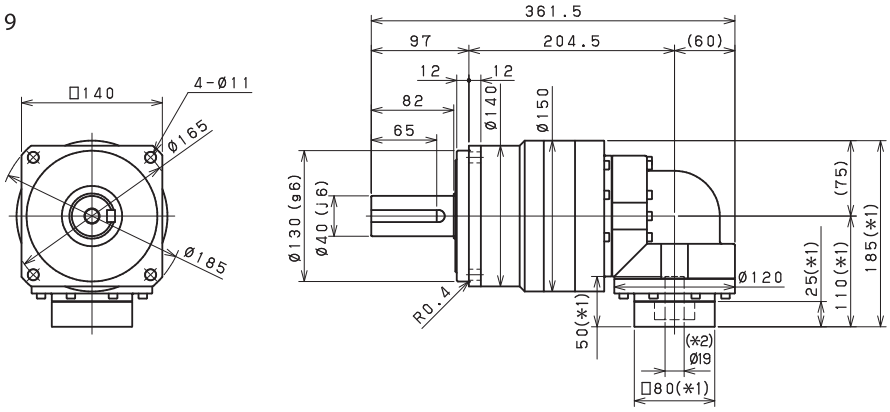

Input shaft bore ≦φ28

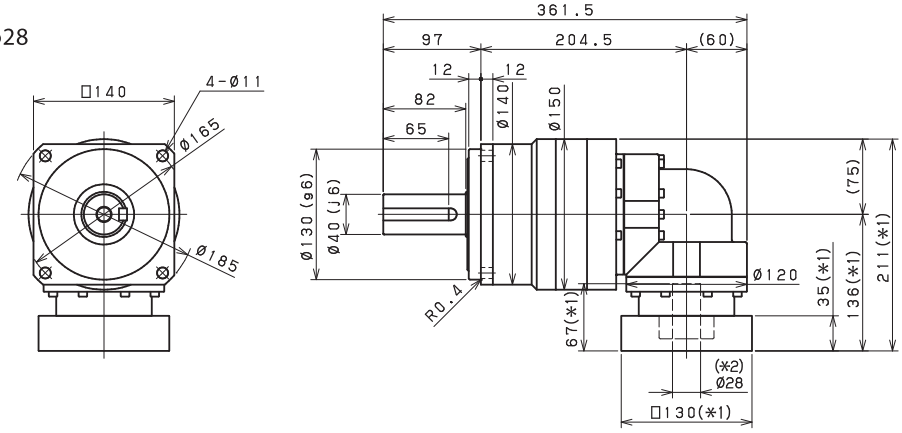

Input shaft bore ≦φ38

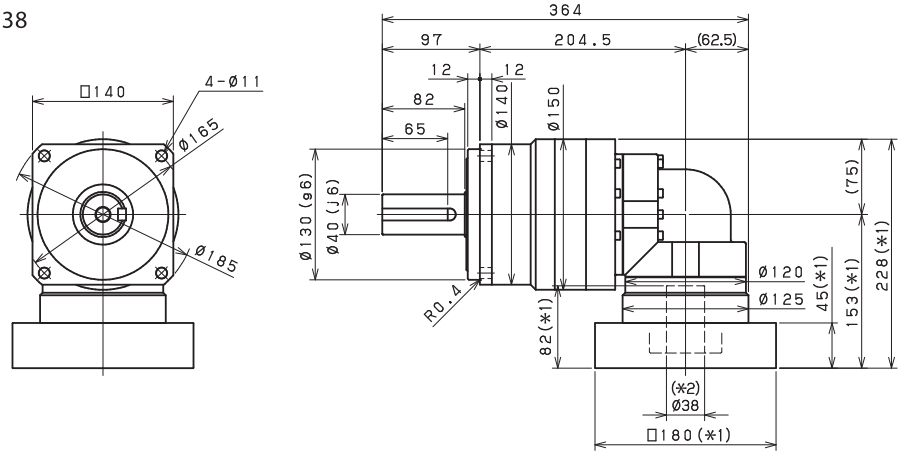

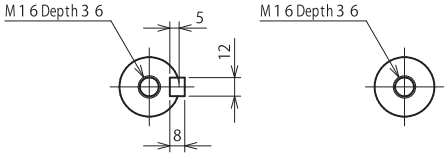

Shaft with key　　Smooth shaft

*1) Length will vary depending on motor

*2) Bushing will be inserted to adapt to motor shaft

EVB

EVB-140 – 2-Stage Adapter Dimensions

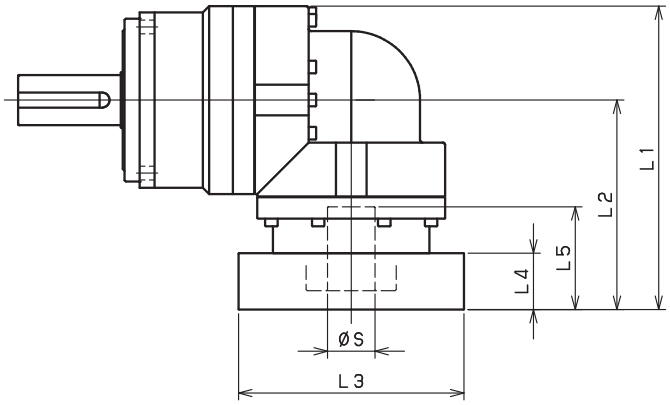

Model number	**: Adapter code	2-Stage				
		L1	L2	L3	L4	L5
EVB-140-□-□-19** (S≦ 19)	DA•DB•DC	--	--	--	--	--
	EB•ED	--	--	--	--	--
	FA	--	--	--	--	--
	FB	--	--	--	--	--
	GB•GD•GJ	--	--	--	--	--
	HA	--	--	--	--	--
	HB	--	--	--	--	--
	JA	--	--	--	--	--
EVB-140-□-□-28** (19< S≦ 28)	FA•FB•FC	227	152	□100	35	67
	GA•GB•GC•GD•GE•GF•GG•GH	227	152	□115	35	67
	HA•HC•HD	227	152	□130	35	67
	HB	237	162	□130	45	77
	HF	222	147	□130	30	62
	JA•JB•JC•JF	227	152	□150	35	67
	KA•KB•KE	227	152	□180	35	67
	LA	227	152	□200	35	67
	LB	237	162	□200	45	77
	MA	227	152	□220	35	67
	MB	237	162	□220	45	77
EVB-140-□-□-38** (28< S≦ 38)	HA	242	167	□130	45	82
	HB•HE	237	162	□130	40	77
	JA	242	167	□150	45	82
	KA•KB•KC	242	167	□180	45	82
	KD	277	202	□180	80	117
	KE	257	182	□180	60	97
	LA	242	167	□200	45	82
	LB	252	177	□200	55	92
	MA•MB	242	167	□220	45	82
	MC	257	182	□220	60	97
	MD	252	177	□220	55	92
EVB-140-□-□-48** (38< S≦ 48)	KA	288	213	□180	75	118
	KB•KC	268	193	□180	55	98
	LA	268	193	□200	55	98
	MA	268	193	□220	55	98
	MB	288	213	□220	75	118

*1) Double reduction : 1/3~ 1/10 *2) Bushing will be inserted to adapt to motor shaft

For an explanation on the Adapter Flange Code, please turn to page 422.

A more comprehensive adapter flange offering can be found using the NIDEC-SHIMPO Online Selector Tool. The variety is constantly expanding and being updated on the Selector Tool. If you have any questions or need any support, contact NIDEC-SHIMPO.

EVB-140 – 3-Stage Adapter Dimensions

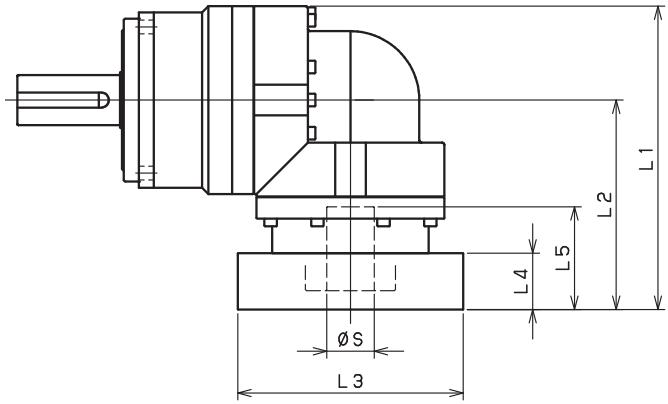

Model number	**: Adapter code	3-Stage				
		L1	L2	L3	L4	L5
EVB-140-□-□-19** (S≦ 19)	DA•DB•DC	185	110	□80	25	50
	EB•ED	185	110	□90	25	50
	FA	185	110	□100	25	50
	FB	195	120	□100	35	60
	GB•GD•GJ	185	110	□115	25	50
	HA	185	110	□130	25	50
	HB	200	125	□130	40	65
	JA	195	120	□150	35	60
EVB-140-□-□-28** (19< S≦ 28)	FA•FB•FC	211	136	□100	35	67
	GA•GB•GC•GD•GE•GF•GG•GH	211	136	□115	35	67
	HA•HC•HD	211	136	□130	35	67
	HB	221	146	□130	45	77
	HF	206	131	□130	30	62
	JA•JB•JC•JF	211	136	□150	35	67
	KA•KB•KE	211	136	□180	35	67
	LA	211	136	□200	35	67
	LB	221	146	□200	45	77
	MA	211	136	□220	35	67
	MB	221	146	□220	45	77
EVB-140-□-□-38** (28< S≦ 38)	HA	228	153	□130	45	82
	HB•HE	223	148	□130	40	77
	JA	228	153	□150	45	82
	KA•KB•KC	228	153	□180	45	82
	KD	263	188	□180	80	117
	KE	243	168	□180	60	97
	LA	228	153	□200	45	82
	LB	238	163	□200	55	92
	MA•MB	228	153	□220	45	82
	MC	243	168	□220	60	97
	MD	238	163	□220	55	92
EVB-140-□-□-48** (38< S≦ 48)	KA	--	--	--	--	--
	KB•KC	--	--	--	--	--
	LA	--	--	--	--	--
	MA	--	--	--	--	--
	MB	--	--	--	--	--

*1) Triple reduction : 1/15~ 1/100 *2) Bushing will be inserted to adapt to motor shaft

For an explanation on the Adapter Flange Code, please turn to page 422.

A more comprehensive adapter flange offering can be found using the NIDEC-SHIMPO Online Selector Tool. The variety is constantly expanding and being updated on the Selector Tool. If you have any questions or need any support, contact NIDEC-SHIMPO.

EVB-180 – 2-Stage Specifications

Frame Size	**180**									
Stage	**2-Stage**									
Ratio	Units	Note	3	4	5	6	7	8	9	10
Nominal Output Torque	[Nm]	*1	400	575	600	600	600	600	400	400
Maximum Acceleration Torque	[Nm]	*2	575	770	960	1120	1120	1120	775	775
Emergency Stop Torque	[Nm]	*3	1300	1700	2000	2500	2500	2500	2000	2000
Nominal Input Speed	[rpm]	*4	1500							
Maximum Input Speed	[rpm]	*5	3000							
No Load Running Torque	[Nm]	*6	10.8							
Permitted Radial Load	[N]	*7	5600	6200	6700	7100	7400	7800	8100	8400
Permitted Axial Load	[N]	*8	4300	4900	5400	5800	6300	6600	7000	7300
Maximum Radial Load	[N]	*9	15000							
Maximum Axial Load	[N]	*10	14000							
Moment of Inertia (≤Ø 28)	[kgcm2]	--	--	--	--	--	--	--	--	--
Moment of Inertia (≤Ø 38)	[kgcm2]	--	93.71	77.72	71.89	68.74	66.43	65.27	64.60	64.28
Moment of Inertia (≤ Ø 48)	[kgcm2]	--	128.6	112.6	106.8	103.6	101.3	100.1	99.46	99.14
Moment of Inertia (≤ Ø 65)	[kgcm2]	--	214.2	198.2	192.4	189.2	186.9	185.7	185.1	184.7
Efficiency	[%]	*11	93							
Torsional Rigidity	[Nm/arcmin]	*12	175							
Maximum Torsional Backlash	[Arc-min]	--	≤ 6							
Noise Level	[dB]	*13	≤ 85							
Protection Class	--	*14	IP54 (IP65)							
Ambient Temperature	[°C]	--	0-40							
Permitted Housing Temperature	[°C]	--	90							
Weight	[kg]	*15	49							

EVB-180 – 3-Stage Specifications

Frame Size	**180**									
Stage	**3-Stage**									
Ratio	Units	Note	15	16	20	25	28	30	35	40
Nominal Output Torque	[Nm]	*1	400	555	600	600	600	400	600	600
Maximum Acceleration Torque	[Nm]	*2	775	1120	1120	1120	1120	775	1120	1120
Emergency Stop Torque	[Nm]	*3	2000	2500	2500	2500	2500	2000	2500	2500
Nominal Input Speed	[rpm]	*4	1500							
Maximum Input Speed	[rpm]	*5	3000							
No Load Running Torque	[Nm]	*6	4.7							
Permitted Radial Load	[N]	*7	9600	9800	11000	11000	12000	12000	13000	13000
Permitted Axial Load	[N]	*8	8700	8900	9900	11000	11000	12000	13000	13000
Maximum Radial Load	[N]	*9	15000							
Maximum Axial Load	[N]	*10	14000							
Moment of Inertia (≤Ø 28)	[kgcm2]	--	11.49	12.09	11.15	10.98	11.59	10.33	10.83	10.24
Moment of Inertia (≤Ø 38)	[kgcm2]	--	20.28	20.88	19.94	19.77	20.38	19.11	19.62	19.03
Moment of Inertia (≤ Ø 48)	[kgcm2]	--	25.10	25.70	24.76	24.59	25.20	23.94	24.44	23.85
Moment of Inertia (≤ Ø 65)	[kgcm2]	--	--	--	--	--	--	--	--	--
Efficiency	[%]	*11	88							
Torsional Rigidity	[Nm/arcmin]	*12	175							
Maximum Torsional Backlash	[Arc-min]	--	≤ 9							
Noise Level	[dB]	*13	≤ 85							
Protection Class	--	*14	IP54 (IP65)							
Ambient Temperature	[°C]	--	0-40							
Permitted Housing Temperature	[°C]	--	90							
Weight	[kg]	*15	36							

EVB-180 – 3-Stage Specifications

Frame Size	180								
Stage	**3-Stage**								
Ratio	Units	Note	45	50	60	70	80	90	100
Nominal Output Torque	[Nm]	*1	400	600	600	600	600	400	400
Maximum Acceleration Torque	[Nm]	*2	775	1120	1120	1120	1120	775	775
Emergency Stop Torque	[Nm]	*3	2000	2500	2500	2500	2500	2000	2000
Nominal Input Speed	[rpm]	*4	1500						
Maximum Input Speed	[rpm]	*5	3000						
No Load Running Torque	[Nm]	*6	4.7						
Permitted Radial Load	[N]	*7	14000	14000	15000	15000	15000	15000	15000
Permitted Axial Load	[N]	*8	14000	14000	14000	14000	14000	14000	14000
Maximum Radial Load	[N]	*9	15000						
Maximum Axial Load	[N]	*10	14000						
Moment of Inertia (≤Ø 28)	[kgcm2]	--	10.76	10.20	10.18	10.16	10.15	10.15	10.14
Moment of Inertia (≤Ø 38)	[kgcm2]	--	19.55	18.99	18.96	18.95	18.94	18.93	18.93
Moment of Inertia (≤ Ø 48)	[kgcm2]	--	24.37	23.81	23.78	23.77	23.76	23.75	23.75
Moment of Inertia (≤ Ø 65)	[kgcm2]	--	--	--	--	--	--	--	--
Efficiency	[%]	*11	88						
Torsional Rigidity	[Nm/arcmin]	*12	175						
Maximum Torsional Backlash	[Arc-min]	--	≤ 9						
Noise Level	[dB]	*13	≤ 85						
Protection Class	--	*14	IP54 (IP65)						
Ambient Temperature	[°C]	--	0-40						
Permitted Housing Temperature	[°C]	--	90						
Weight	[kg]	*15	36						

*1) At nominal input speed, service life is 20,000 hours
*2) The maximum torque when starting or stopping operation
*3) The maximum torque allowed under a stress situation (Permitted 1,000 times during service life)
*4) The average input speed
*5) The maximum intermittent input speed
*6) This is the torque at no load applied on the input shaft. The input speed is 1500 rpm for EVB180
*7) At this load and nominal input speed, service life will be 20,000 hours. (The radial load applied to the output side bearing)
*8) At this load and nominal input speed, service life will be 20,000 hours. (The axial load applied to the output shaft center)
*9) The maximum radial load that the reducer can accept
*10) The maximum axial load that the reducer can accept
*11) The efficiency at the nominal torque rating
*12) This does not include the lost motion
*13) Contact NIDEC-SHIMPO for the testing conditions and environment
*14) IP65 (wash-down) is available as an option. Contact NIDEC-SHIMPO for more details and our food grade options
*15) The weight may vary slightly between models

EVB-180 – 2-Stage Dimensions

Input shaft bore ≦φ38

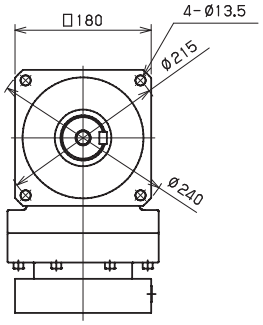

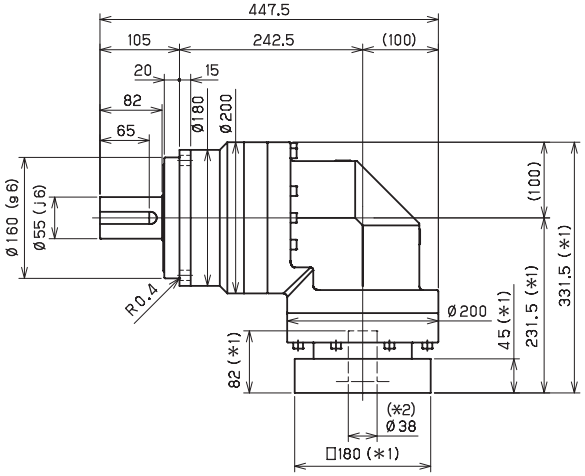

Input shaft bore ≦φ48

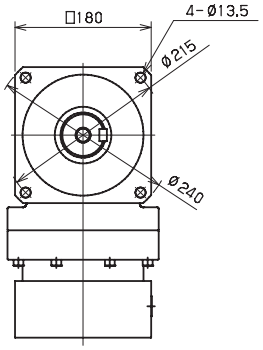

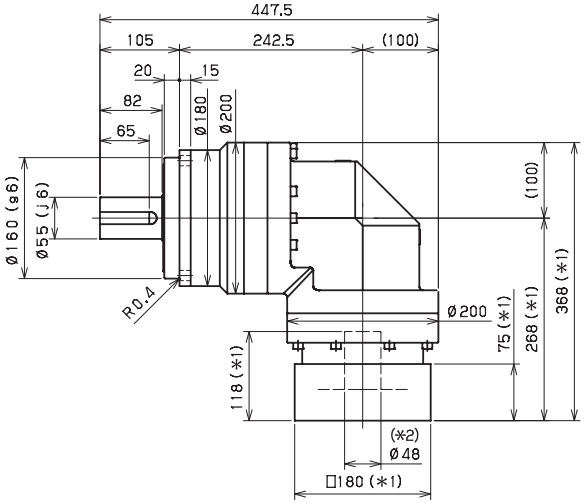

Input shaft bore ≦φ65

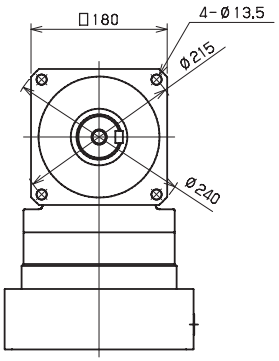

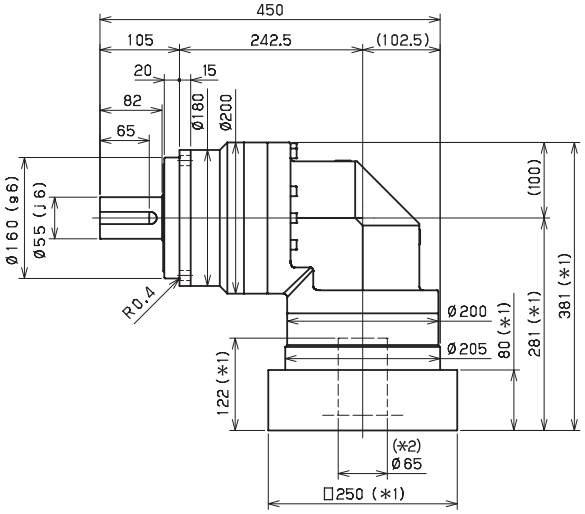

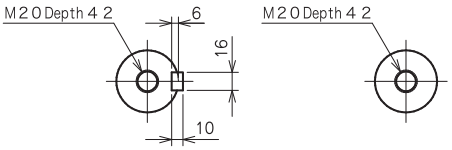

Shaft with key　　Smooth shaft

*1) Length will vary depending on motor

*2) Bushing will be inserted to adapt to motor shaft

EVB-180 – 3-Stage Dimensions

Input shaft bore ≦φ28

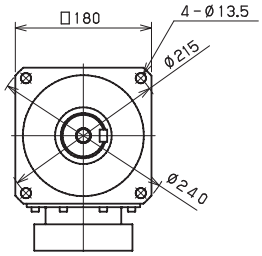

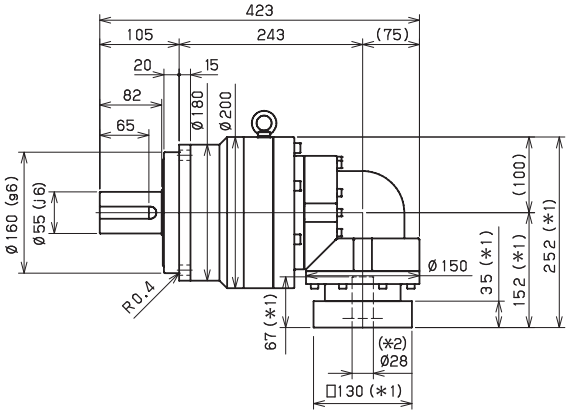

Input shaft bore ≦φ38

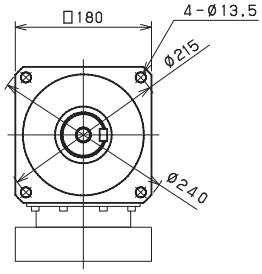

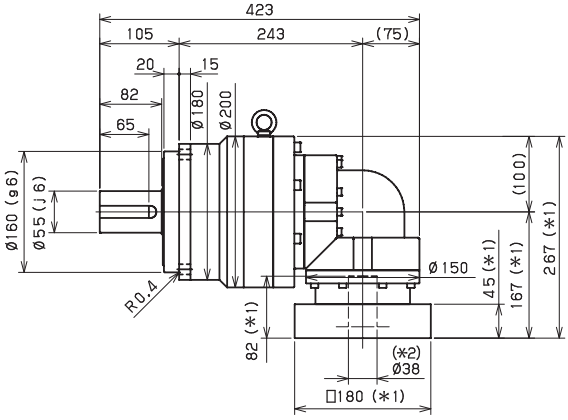

Input shaft bore ≦φ48

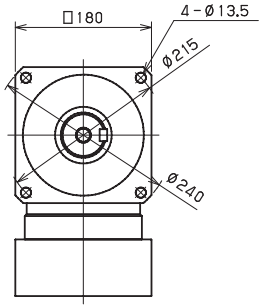

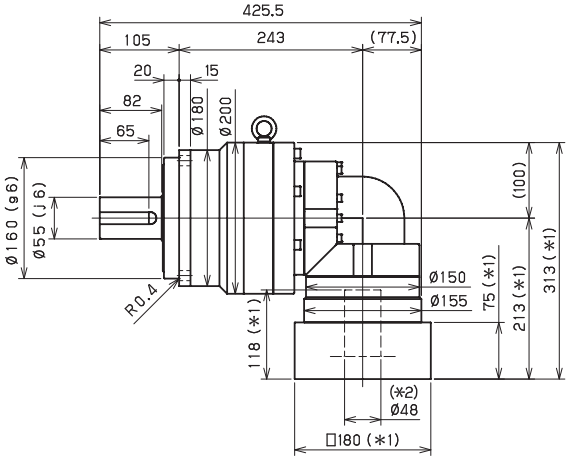

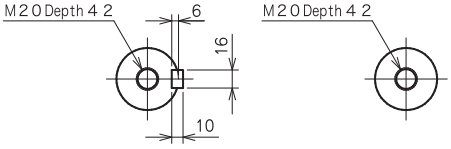

Shaft with key　　Smooth shaft

*1) Length will vary depending on motor

*2) Bushing will be inserted to adapt to motor shaft

EVB-180 – 2-Stage Adapter Dimensions

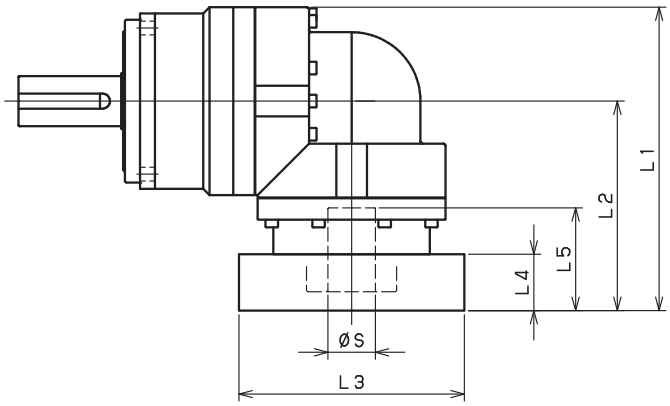

Model number	**: Adapter code	2-Stage				
		L1	L2	L3	L4	L5
EVB-180-□-□-28** (S≦ 28)	FA•FB•FC	--	--	--	--	--
	GA•GB•GC•GD•GE•GF•GG•GH	--	--	--	--	--
	HA•HC•HD	--	--	--	--	--
	HB	--	--	--	--	--
	HF	--	--	--	--	--
	JA•JB•JC•JF	--	--	--	--	--
	KA•KB•KE	--	--	--	--	--
	LA	--	--	--	--	--
	LB	--	--	--	--	--
	MA	--	--	--	--	--
	MB	--	--	--	--	--
EVB-180-□-□-38** (28< S≦ 38)	HA	331.5	231.5	□130	45	82
	HB•HE	326.5	226.5	□130	40	77
	JA	331.5	231.5	□150	45	82
	KA•KB•KC	331.5	231.5	□180	45	82
	KD	366.5	266.5	□180	80	117
	KE	346.5	246.5	□180	60	97
	LB	341.5	241.5	□200	55	92
	MA•MB	331.5	231.5	□220	45	82
	MC	346.5	246.5	□220	60	97
	MD	341.5	241.5	□220	55	92
	NA	331.5	231.5	□250	45	82
EVB-180-□-□-48** (38< S≦ 48)	KA	368	268	□180	75	118
	KB•KC	348	248	□180	55	98
	LA	348	248	□200	55	98
	MA	348	248	□220	55	98
	MB	368	268	□220	75	118
	NA	368	268	□250	75	118
	PA	368	268	□280	75	118
EVB-180-□-□-65** (48< S≦ 65)	MA•MB•MC•MD	381	281	□220	80	122
	NA•NC	381	281	□250	80	122
	NB•ND	411	311	□250	110	152
	PA	401	301	□280	100	142
	PB	411	311	□280	110	152

*1) Double reduction : 1/3~ 1/10 *2) Bushing will be inserted to adapt to motor shaft

For an explanation on the Adapter Flange Code, please turn to page 422.

A more comprehensive adapter flange offering can be found using the NIDEC-SHIMPO Online Selector Tool. The variety is constantly expanding and being updated on the Selector Tool. If you have any questions or need any support, contact NIDEC-SHIMPO.

EVB-180 – 3-Stage Adapter Dimensions

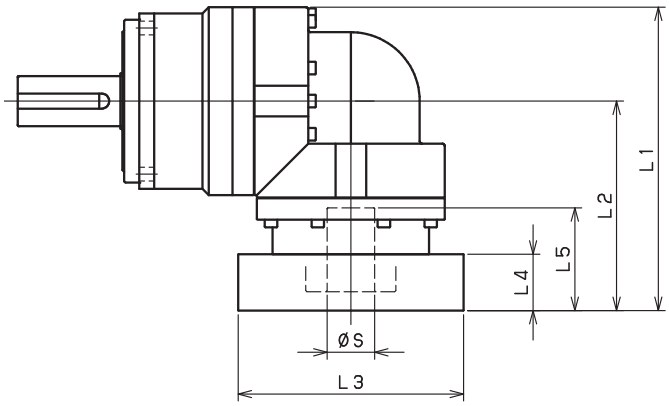

Model number	**: Adapter code	3-Stage				
		L1	L2	L3	L4	L5
EVB-180-□-□-28** (S≦ 28)	FA•FB•FC	252	152	□100	35	67
	GA•GB•GC•GD•GE•GF•GG•GH	252	152	□115	35	67
	HA•HC•HD	252	152	□130	35	67
	HB	262	162	□130	45	77
	HF	247	147	□130	30	62
	JA•JB•JC•JF	252	152	□150	35	67
	KA•KB•KE	252	152	□180	35	67
	LA	252	152	□200	35	67
	LB	262	162	□200	45	77
	MA	252	152	□220	35	67
	MB	262	162	□220	45	77
EVB-180-□-□-38** (28< S≦ 38)	HA	267	167	□130	45	82
	HB•HE	262	162	□130	40	77
	JA	267	167	□150	45	82
	KA•KB•KC	267	167	□180	45	82
	KD	302	202	□180	80	117
	KE	282	182	□180	60	97
	LB	277	177	□200	55	92
	MA•MB	267	167	□220	45	82
	MC	282	182	□220	60	97
	MD	277	177	□220	55	92
	NA	267	167	□250	45	82
EVB-180-□-□-48** (38< S≦ 48)	KA	313	213	□180	75	118
	KB•KC	293	193	□180	55	98
	LA	293	193	□200	55	98
	MA	293	193	□220	55	98
	MB	313	213	□220	75	118
	NA	313	213	□250	75	118
	PA	313	213	□280	75	118
EVB-180-□-□-65** (48< S≦ 65)	MA•MB•MC•MD	--	--	--	--	--
	NA•NC	--	--	--	--	--
	NB•ND	--	--	--	--	--
	PA	--	--	--	--	--
	PB	--	--	--	--	--

*1) Triple reduction : 1/15~ 1/100 *2) Bushing will be inserted to adapt to motor shaft

For an explanation on the Adapter Flange Code, please turn to page 422.

A more comprehensive adapter flange offering can be found using the NIDEC-SHIMPO Online Selector Tool. The variety is constantly expanding and being updated on the Selector Tool. If you have any questions or need any support, contact NIDEC-SHIMPO.

EVB-220 – 2-Stage Specifications

Frame Size	**220**									
Stage	**2-Stage**									
Ratio	Units	Note	3	4	5	6	7	8	9	10
Nominal Output Torque	[Nm]	*1	575	765	960	1150	1200	1200	800	800
Maximum Acceleration Torque	[Nm]	*2	1015	1355	1695	1840	1840	1760	1520	1280
Emergency Stop Torque	[Nm]	*3	2500	3300	4000	4500	4500	4500	3600	3600
Nominal Input Speed	[rpm]	*4	1000							
Maximum Input Speed	[rpm]	*5	2000							
No Load Running Torque	[Nm]	*6	14.5							
Permitted Radial Load	[N]	*7	5800	6400	6900	7300	7700	8000	8400	8700
Permitted Axial Load	[N]	*8	6400	7200	7900	8600	9200	9700	10000	11000
Maximum Radial Load	[N]	*9	15000							
Maximum Axial Load	[N]	*10	14000							
Moment of Inertia (≤Ø 38)	[kgcm2]	--	--	--	--	--	--	--	--	--
Moment of Inertia (≤Ø 48)	[kgcm2]	--	148.0	122.9	113.3	108.1	104.7	102.7	101.6	101.0
Moment of Inertia (≤ Ø 65)	[kgcm2]	--	223.2	198.1	188.6	183.3	180.0	178.0	176.8	176.2
Efficiency	[%]	*11	93							
Torsional Rigidity	[Nm/arcmin]	*12	400							
Maximum Torsional Backlash	[Arc-min]	--	≤ 6							
Noise Level	[dB]	*13	≤ 85							
Protection Class	--	*14	IP54 (IP65)							
Ambient Temperature	[°C]	--	0-40							
Permitted Housing Temperature	[°C]	--	90							
Weight	[kg]	*15	66							

EVB-220 – 3-Stage Specifications

Frame Size	**220**									
Stage	**3-Stage**									
Ratio	Units	Note	15	16	20	25	28	30	35	40
Nominal Output Torque	[Nm]	*1	800	1200	1200	1200	1200	800	1200	1200
Maximum Acceleration Torque	[Nm]	*2	1280	1840	1840	1840	1840	1280	1840	1840
Emergency Stop Torque	[Nm]	*3	3600	4500	4500	4500	4500	3600	4500	4500
Nominal Input Speed	[rpm]	*4	1000							
Maximum Input Speed	[rpm]	*5	2000							
No Load Running Torque	[Nm]	*6	10.2							
Permitted Radial Load	[N]	*7	9900	10000	11000	12000	12000	13000	13000	14000
Permitted Axial Load	[N]	*8	13000	13000	14000	14000	14000	14000	14000	14000
Maximum Radial Load	[N]	*9	15000							
Maximum Axial Load	[N]	*10	14000							
Moment of Inertia (≤Ø 38)	[kgcm2]	--	36.32	37.24	35.75	35.47	36.39	34.39	35.21	34.25
Moment of Inertia (≤Ø 48)	[kgcm2]	--	66.14	67.06	65.57	65.28	66.21	64.21	65.03	64.07
Moment of Inertia (≤ Ø 65)	[kgcm2]	--	--	--	--	--	--	--	--	--
Efficiency	[%]	*11	88							
Torsional Rigidity	[Nm/arcmin]	*12	400							
Maximum Torsional Backlash	[Arc-min]	--	≤ 9							
Noise Level	[dB]	*13	≤ 85							
Protection Class	--	*14	IP54 (IP65)							
Ambient Temperature	[°C]	--	0-40							
Permitted Housing Temperature	[°C]	--	90							
Weight	[kg]	*15	67							

EVB-220 – 3-Stage Specifications

Frame Size	**220**								
Stage	**3-Stage**								
Ratio	Units	Note	45	50	60	70	80	90	100
Nominal Output Torque	[Nm]	*1	800	1200	1200	1200	1200	800	800
Maximum Acceleration Torque	[Nm]	*2	1040	1840	1840	1840	1440	1040	960
Emergency Stop Torque	[Nm]	*3	3600	4500	4500	4500	4500	3600	3600
Nominal Input Speed	[rpm]	*4	1000						
Maximum Input Speed	[rpm]	*5	2000						
No Load Running Torque	[Nm]	*6	10.2						
Permitted Radial Load	[N]	*7	14000	15000	15000	15000	15000	15000	15000
Permitted Axial Load	[N]	*8	14000	14000	14000	14000	14000	14000	14000
Maximum Radial Load	[N]	*9	15000						
Maximum Axial Load	[N]	*10	14000						
Moment of Inertia (≤Ø 38)	[kgcm2]	--	35.10	34.18	34.14	34.11	34.10	34.09	34.08
Moment of Inertia (≤Ø 48)	[kgcm2]	--	64.92	63.99	63.95	63.93	63.91	63.90	63.90
Moment of Inertia (≤ Ø 65)	[kgcm2]	--	--	--	--	--	--	--	--
Efficiency	[%]	*11	88						
Torsional Rigidity	[Nm/arcmin]	*12	400						
Maximum Torsional Backlash	[Arc-min]	--	≤ 9						
Noise Level	[dB]	*13	≤ 85						
Protection Class	--	*14	IP54 (IP65)						
Ambient Temperature	[°C]	--	0-40						
Permitted Housing Temperature	[°C]	--	90						
Weight	[kg]	*15	67						

*1) At nominal input speed, service life is 20,000 hours
*2) The maximum torque when starting or stopping operation
*3) The maximum torque allowed under a stress situation (Permitted 1,000 times during service life)
*4) The average input speed
*5) The maximum intermittent input speed
*6) This is the torque at no load applied on the input shaft. The input speed is 1000 rpm for EVB220
*7) At this load and nominal input speed, service life will be 20,000 hours. (The radial load applied to the output side bearing)
*8) At this load and nominal input speed, service life will be 20,000 hours. (The axial load applied to the output shaft center)
*9) The maximum radial load that the reducer can accept
*10) The maximum axial load that the reducer can accept
*11) The efficiency at the nominal torque rating
*12) This does not include the lost motion
*13) Contact NIDEC-SHIMPO for the testing conditions and environment
*14) IP65 (wash-down) is available as an option. Contact NIDEC-SHIMPO for more details and our food grade options
*15) The weight may vary slightly between models

EVB-220 – 2-Stage Dimensions

Input shaft bore ≦φ48

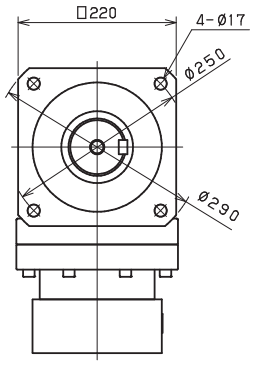

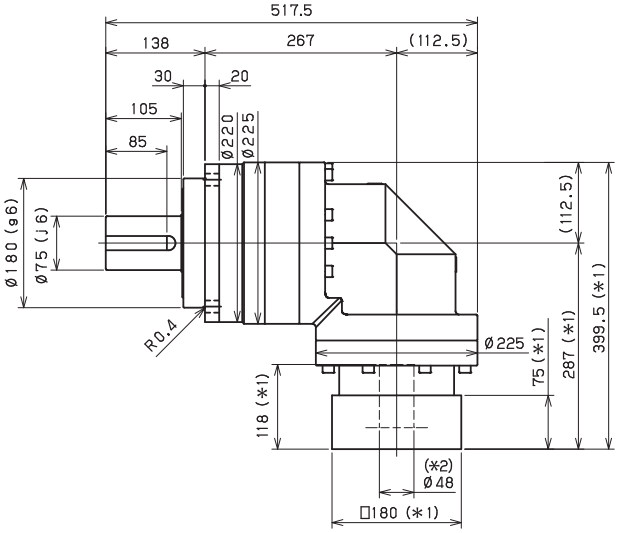

Input shaft bore ≦φ65

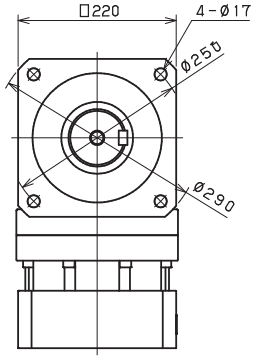

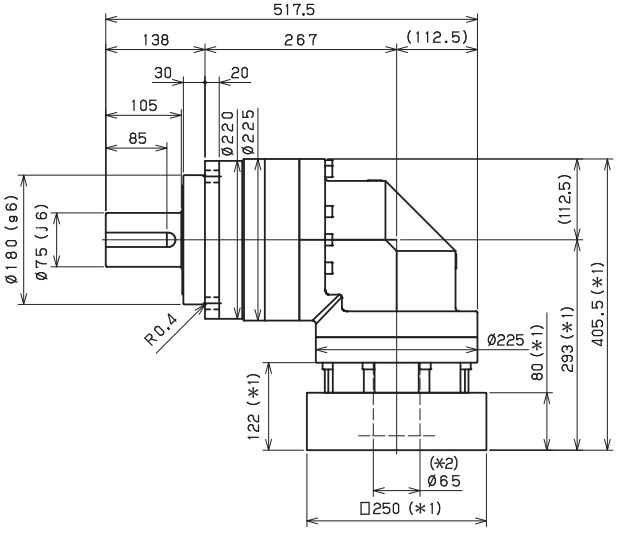

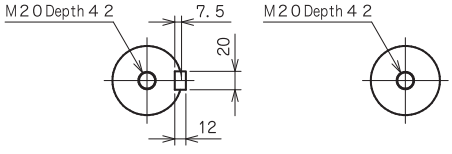

Shaft with key　　Smooth shaft

*1) Length will vary depending on motor

*2) Bushing will be inserted to adapt to motor shaft

EVB-220 – 3-Stage Dimensions

Input shaft bore ≦φ38

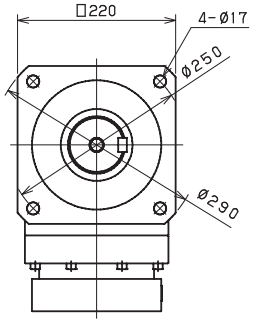

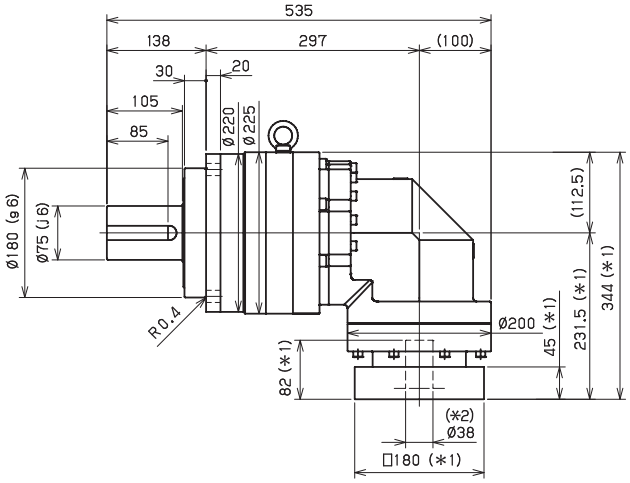

Input shaft bore ≦φ48

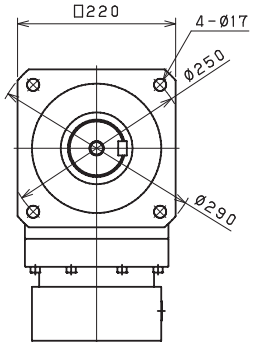

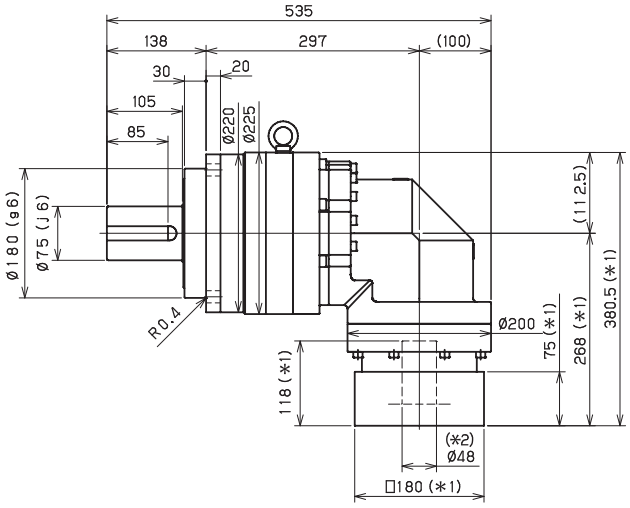

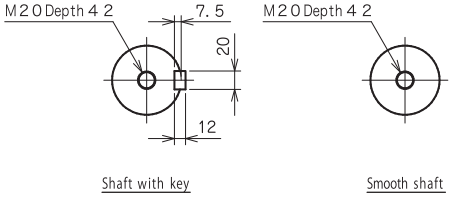

*1) Length will vary depending on motor

*2) Bushing will be inserted to adapt to motor shaft

EVB-220 – 2-Stage Adapter Dimensions

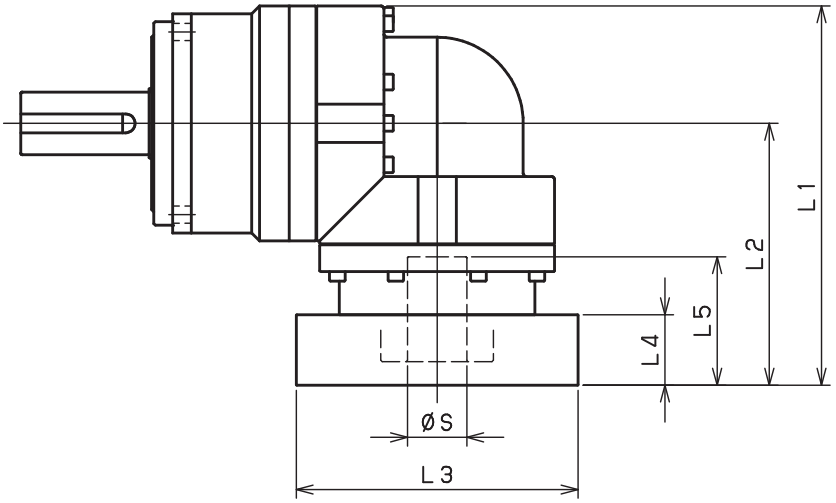

Model number	**: Adapter code	2-Stage				
		L1	L2	L3	L4	L5
EVB-220-□-□-38** (S≦ 38)	HA	--	--	--	--	--
	HB•HE	--	--	--	--	--
	JA	--	--	--	--	--
	KA•KB•KC	--	--	--	--	--
	KD	--	--	--	--	--
	KE	--	--	--	--	--
	LA	--	--	--	--	--
	LB	--	--	--	--	--
	MA•MB	--	--	--	--	--
	MC	--	--	--	--	--
	MD	--	--	--	--	--
	NA	--	--	--	--	--
EVB-220-□-□-48** (38< S≦ 48)	KA	399.5	287	□180	75	118
	KB•KC	379.5	267	□180	55	98
	LA	379.5	267	□200	55	98
	MA	379.5	267	□220	55	98
	MB	399.5	287	□220	75	118
	NA	399.5	287	□250	75	118
	PA	399.5	287	□280	75	118
EVB-220-□-□-65** (48< S≦ 65)	MA•MB•MC•MD	405.5	293	□220	80	122
	NA•NC	405.5	293	□250	80	122
	NB•ND	435.5	323	□250	110	152
	PA	425.5	313	□280	100	142
	PB	435.5	323	□280	110	152
	QA•QB	425.5	313	□320	100	142

*1) Double reduction : 1/3~ 1/10

*2) Bushing will be inserted to adapt to motor shaft

For an explanation on the Adapter Flange Code, please turn to page 422.

A more comprehensive adapter flange offering can be found using the NIDEC-SHIMPO Online Selector Tool. The variety is constantly expanding and being updated on the Selector Tool. If you have any questions or need any support, contact NIDEC-SHIMPO.

EVB-220 – 3-Stage Adapter Dimensions

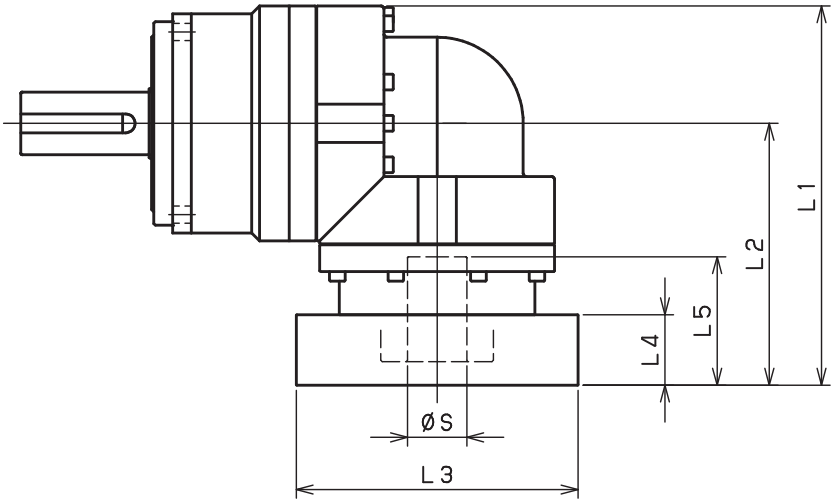

Model number	**: Adapter code	3-Stage				
		L1	L2	L3	L4	L5
EVB-220-□-□-38** (S≦ 38)	HA	344	231.5	□130	45	82
	HB•HE	339	226.5	□130	40	77
	JA	344	231.5	□150	45	82
	KA•KB•KC	344	231.5	□180	45	82
	KD	379	266.5	□180	80	117
	KE	359	246.5	□180	60	97
	LA	344	231.5	□200	45	82
	LB	354	241.5	□200	55	92
	MA•MB	344	231.5	□220	45	82
	MC	359	246.5	□220	60	97
	MD	354	241.5	□220	55	92
	NA	344	231.5	□250	45	82
EVB-220-□-□-48** (38< S≦ 48)	KA	380.5	268	□180	75	118
	KB•KC	360.5	248	□180	55	98
	LA	360.5	248	□200	55	98
	MA	360.5	248	□220	55	98
	MB	380.5	268	□220	75	118
	NA	380.5	268	□250	75	118
	PA	380.5	268	□280	75	118
EVB-220-□-□-65** (48< S≦ 65)	MA•MB•MC•MD	--	--	--	--	--
	NA•NC	--	--	--	--	--
	NB•ND	--	--	--	--	--
	PA	--	--	--	--	--
	PB	--	--	--	--	--
	QA•QB	--	--	--	--	--

*1) Triple reduction : 1/15~ 1/100

*2) Bushing will be inserted to adapt to motor shaft

For an explanation on the Adapter Flange Code, please turn to page 422.

A more comprehensive adapter flange offering can be found using the NIDEC-SHIMPO Online Selector Tool. The variety is constantly expanding and being updated on the Selector Tool. If you have any questions or need any support, contact NIDEC-SHIMPO.

EVS-SERIES

For applications that require exceptional load handling capabilities in an optimum foot print, the EVS series is the performance leader. The right-angle equivalent to the VRS, the EVS internal design provides an extremely smooth running, quiet reducer even when challenging static forces are applied. The tapered roller bearings at the output side allow the EVS to handle larger radial and thrust load forces than the typical planetary gearbox.

The EVS series is a high precision right-angle gearhead having a maximum 4 arc-min backlash rating, while handling a peak output torque reaching 600 Nm. The series is commonly utilized in custom assembly applications or in robotic tooling. Very low backlash and off-set load handling capabilities are critical characteristics for these types of applications.

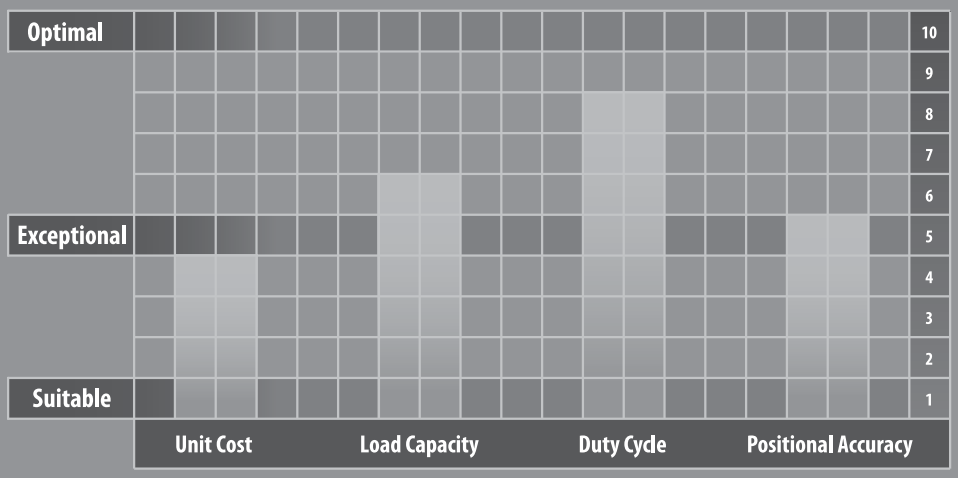

EVS-SERIES

- Industry standard mounting dimensions
- Large variety of reduction ratios to choose from
- Thru-bolt mounting style
- Low backlash (≤4 arc-min)
- Space-saving design, when minimal envelope available
- Highest radial and axial load ratings among right-angle options
- Readily available

EVS-Series – Features

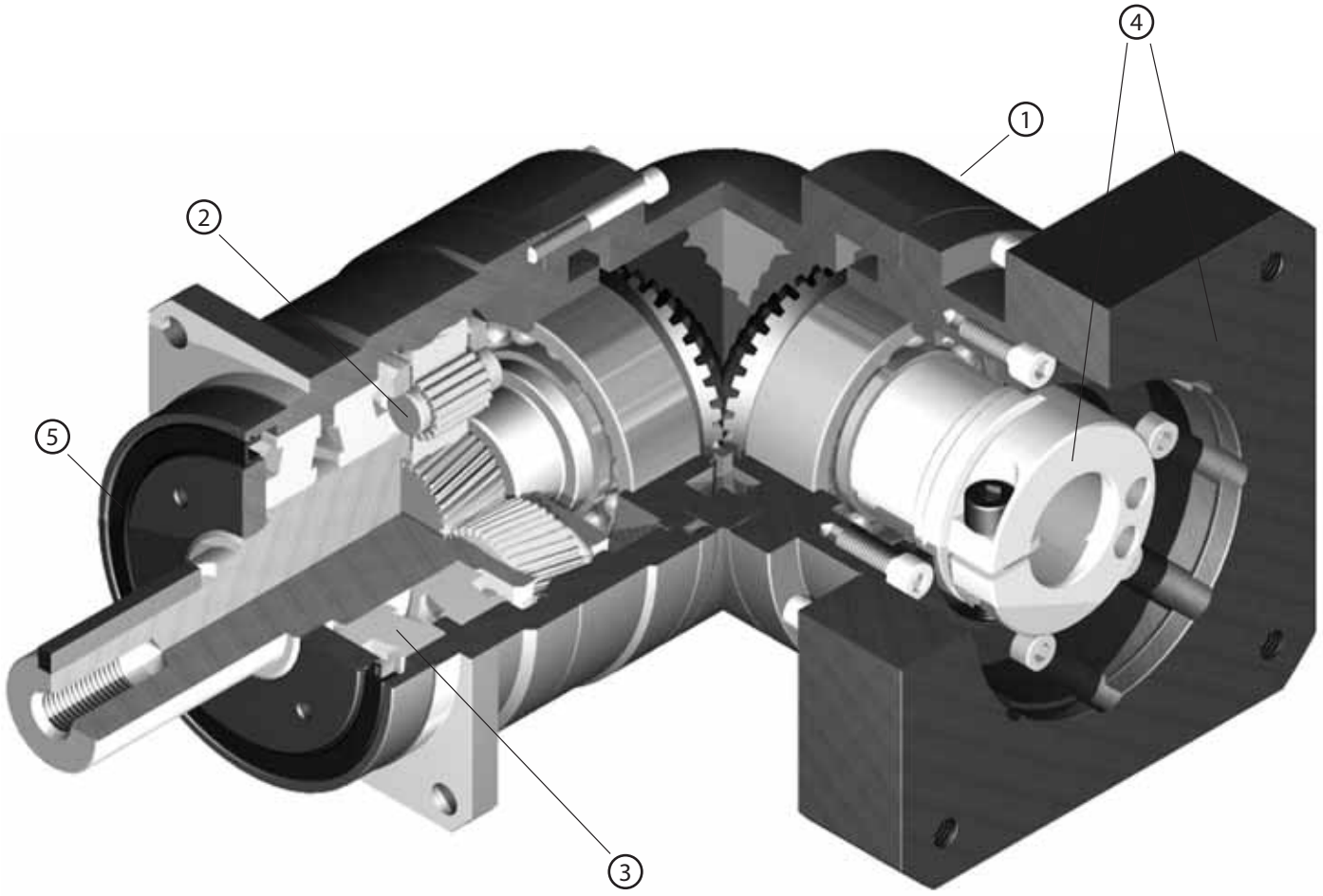

1. Space–saving features; motor can be located at a 90 degree position from the reducer providing a more compact footprint
2. High rigidity and torque capacity are achieved by using uncaged needle roller bearings
3. High load capacity: Tapered roller bearings were added to the output section to increase radial and axial load ratings
4. Adapter-bushing connection enable a simple, effective attachment to most servo motors
5. No leakage through the seal; high viscosity, anti-separation grease does not liquefy and does not migrate away from the gears
6. No need to replace the grease for the life of the unit. The reducer can be positioned in any orientation

EVS-Series – Model Code

EV	S	–	100	B	–	7	–	K	4	19HB16

- 19HB16: ＊ Adapter flange code
- 4: Backlash
  - 060, 075, 100, 140: 4 arc-min (2stage), 7 arc-min (3stage)
  - 180, 210, 240: 6 arc-min (2stage), 9 arc-min (3stage)
- K: Output style
  - K・・・ Shaft with key
  - S・・・ Smooth shaft
- 7: Ratio
  - 2stage：3, 4, 5, 6, 7, 8, 9, 10
  - 3stage：15, 16, 20, 25, 28, 30, 35, 40, 45, 50, 60, 70, 80, 90, 100
- B: Generation of design
- 100: Frame size 060, 075, 100, 140, 180, 210, 240
- S: Series name EVS Series
- EV: Model name for ABLE reducer

*1) Adapter flange code
Adapter flange code varies depending on the motor.

Contact us for additional information or refer to our online reducer selection tool.
Selection tool www.nidec-shimpo.co.jp/selection/eng

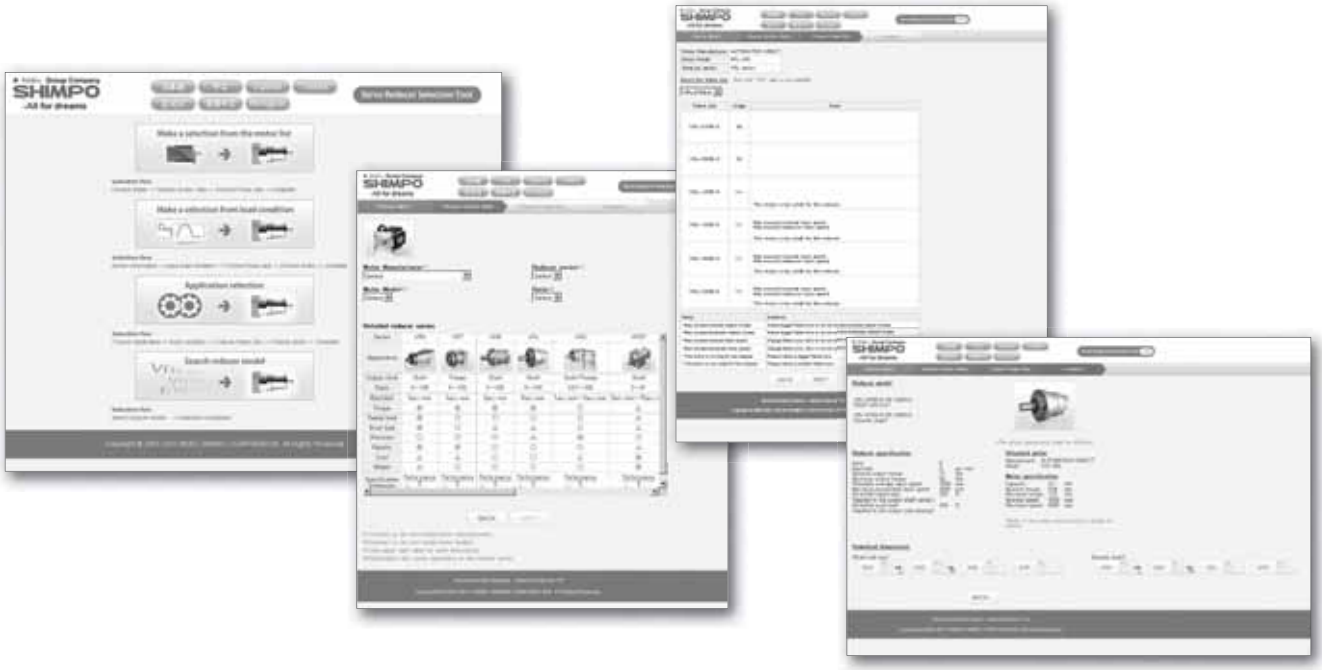

EVS-060 – 2-Stage Specifications

Frame Size	**060**									
Stage	**2-Stage**									
Ratio	Unit	Note	3	4	5	6	7	8	9	10
Nominal Output Torque	[Nm]	*1	12	16	22	24	24	24	16	16
Maximum Acceleration Torque	[Nm]	*2	24	32	40	45	45	45	32	32
Emergency Stop Torque	[Nm]	*3	50	65	80	90	90	90	65	65
Nominal Input Speed	[rpm]	*4	3000							
Maximum Input Speed	[rpm]	*5	6000							
No Load Running Torque	[Nm]	*6	0.33							
Permitted Radial Load	[N]	*7	1700	1900	2000	2100	2200	2300	2400	2400
Permitted Axial Load	[N]	*8	2300	2500	2700	2700	2700	2700	2700	2700
Maximum Radial Load	[N]	*9	3000							
Maximum Axial Load	[N]	*10	2700							
Moment of Inertia (≤ Ø 8)	[kgcm2]	--	0.320	0.271	0.251	0.242	0.235	0.232	0.229	0.228
Moment of Inertia (≤ Ø 14)	[kgcm2]	--	0.395	0.346	0.326	0.317	0.310	0.307	0.304	0.303
Moment of Inertia (≤ Ø 19)	[kgcm2]	--	0.584	0.535	0.516	0.506	0.500	0.496	0.494	0.492
Efficiency	[%]	*11	93							
Torsional Rigidity	[Nm/arc-min]	*12	3							
Maximum Torsional Backlash	[arc-min]	--	≤ 4							
Noise Level	[dB]	*13	80							
Protection Class	--	*14	IP54 (IP65)							
Ambient Temperature	[°C]	--	0-40							
Permitted Housing Temperature	[°C]	--	90							
Weight	[kg]	*15	2							

EVS-060 – 3-Stage Specifications

Frame Size	**060**									
Stage	**3-Stage**									
Ratio	Unit	Note	15	16	20	25	28	30	35	40
Nominal Output Torque	[Nm]	*1	16	24	24	24	24	16	24	24
Maximum Acceleration Torque	[Nm]	*2	32	45	45	45	45	32	45	45
Emergency Stop Torque	[Nm]	*3	65	90	90	90	90	65	90	90
Nominal Input Speed	[rpm]	*4	3000							
Maximum Input Speed	[rpm]	*5	6000							
No Load Running Torque	[Nm]	*6	0.20							
Permitted Radial Load	[N]	*7	2800	2800	3000	3000	3000	3000	3000	3000
Permitted Axial Load	[N]	*8	2700	2700	2700	2700	2700	2700	2700	2700
Maximum Radial Load	[N]	*9	3000							
Maximum Axial Load	[N]	*10	2700							
Moment of Inertia (≤ Ø 8)	[kgcm2]	--	0.074	0.079	0.072	0.071	0.077	0.062	0.070	0.061
Moment of Inertia (≤ Ø 14)	[kgcm2]	--	0.118	0.124	0.116	0.115	0.122	0.106	0.115	0.106
Moment of Inertia (≤ Ø 19)	[kgcm2]	--	--	--	--	--	--	--	--	--
Efficiency	[%]	*11	88							
Torsional Rigidity	[Nm/arc-min]	*12	3							
Maximum Torsional Backlash	[arc-min]	--	≤ 7							
Noise Level	[dB]	*13	80							
Protection Class	--	*14	IP54 (IP65)							
Ambient Temperature	[°C]	--	0-40							
Permitted Housing Temperature	[°C]	--	90							
Weight	[kg]	*15	1.8							

EVS-060 – 3-Stage Specifications

Frame Size	**060**								
Stage	**3-Stage**								
Ratio	Unit	Note	45	50	60	70	80	90	100
Nominal Output Torque	[Nm]	*1	16	24	24	24	24	16	16
Maximum Acceleration Torque	[Nm]	*2	32	45	45	45	45	32	32
Emergency Stop Torque	[Nm]	*3	65	90	90	90	90	65	65
Nominal Input Speed	[rpm]	*4	3000						
Maximum Input Speed	[rpm]	*5	6000						
No Load Running Torque	[Nm]	*6	0.20						
Permitted Radial Load	[N]	*7	3000	3000	3000	3000	3000	3000	3000
Permitted Axial Load	[N]	*8	2700	2700	2700	2700	2700	2700	2700
Maximum Radial Load	[N]	*9	3000						
Maximum Axial Load	[N]	*10	2700						
Moment of Inertia (≤ Ø 8)	[kgcm2]	--	0.070	0.061	0.061	0.061	0.061	0.061	0.061
Moment of Inertia (≤ Ø 14)	[kgcm2]	--	0.115	0.106	0.106	0.106	0.105	0.105	0.105
Moment of Inertia (≤ Ø 19)	[kgcm2]	--	--	--	--	--	--	--	--
Efficiency	[%]	*11	88						
Torsional Rigidity	[Nm/arc-min]	*12	3						
Maximum Torsional Backlash	[arc-min]	--	≤ 7						
Noise Level	[dB]	*13	80						
Protection Class	--	*14	IP54 (IP65)						
Ambient Temperature	[°C]	--	0-40						
Permitted Housing Temperature	[°C]	--	90						
Weight	[kg]	*15	1.8						

*1) At nominal input speed, service life is 20,000 hours
*2) The maximum torque when starting or stopping operation
*3) The maximum torque allowed under a stress situation (Permitted 1,000 times during service life)
*4) The average input speed
*5) The maximum intermittent input speed
*6) This is the torque at no load applied on the input shaft. The input speed is 3000 rpm for EVS060
*7) At this load and nominal input speed, service life will be 20,000 hours. (The radial load applied to the output side bearing)
*8) At this load and nominal input speed, service life will be 20,000 hours. (The axial load applied to the output shaft center)
*9) The maximum radial load that the reducer can accept
*10) The maximum axial load that the reducer can accept
*11) The efficiency at the nominal torque rating
*12) This does not include the lost motion
*13) Contact NIDEC-SHIMPO for the testing conditions and environment
*14) IP65 (wash-down) is available as an option. Contact NIDEC-SHIMPO for more details and our food grade options
*15) The weight may vary slightly between models

EVS-060 – 2-Stage Dimensions

Input shaft bore ≦φ8

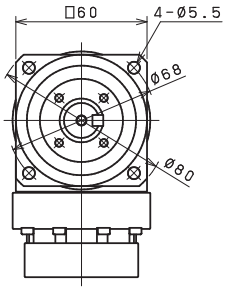

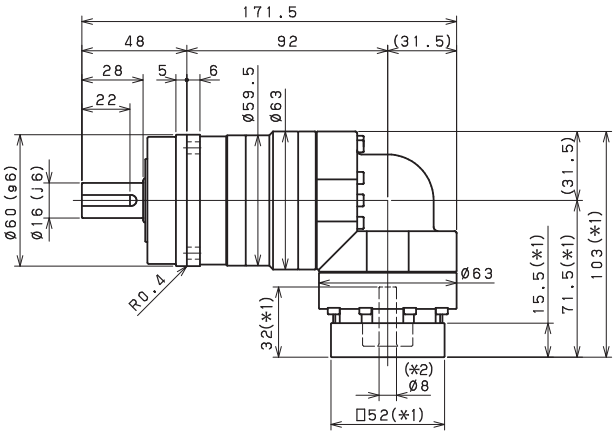

Input shaft bore ≦φ14

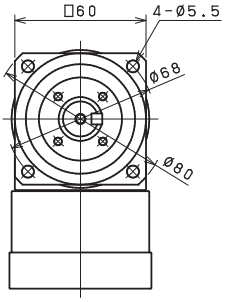

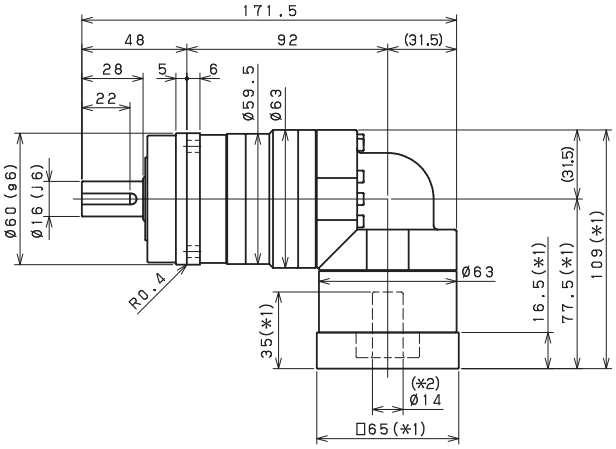

Input shaft bore ≦φ19

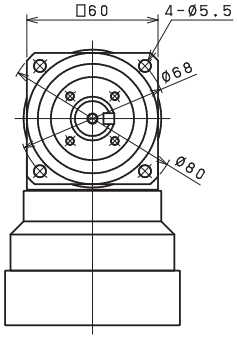

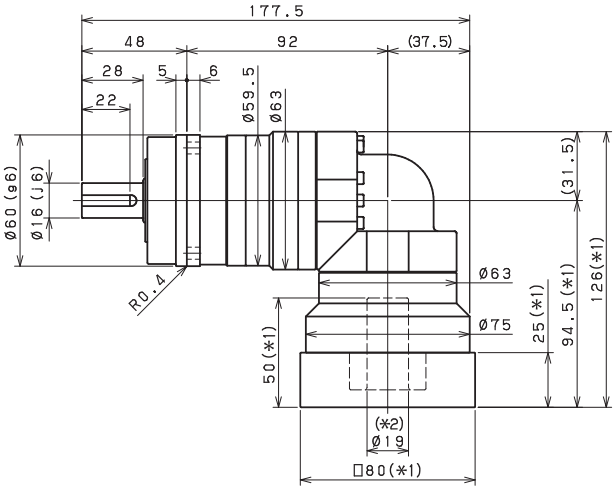

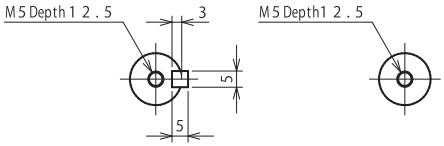

Shaft with key　　Smooth shaft

*1) Length will vary depending on motor

*2) Bushing will be inserted to adapt to motor shaft

EVS-060 – 3-Stage Dimensions

Input shaft bore ≦φ8

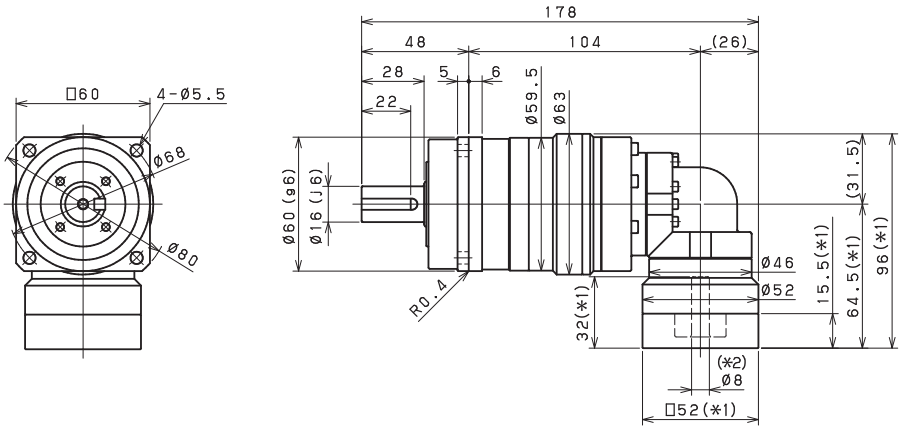

Input shaft bore ≦φ14

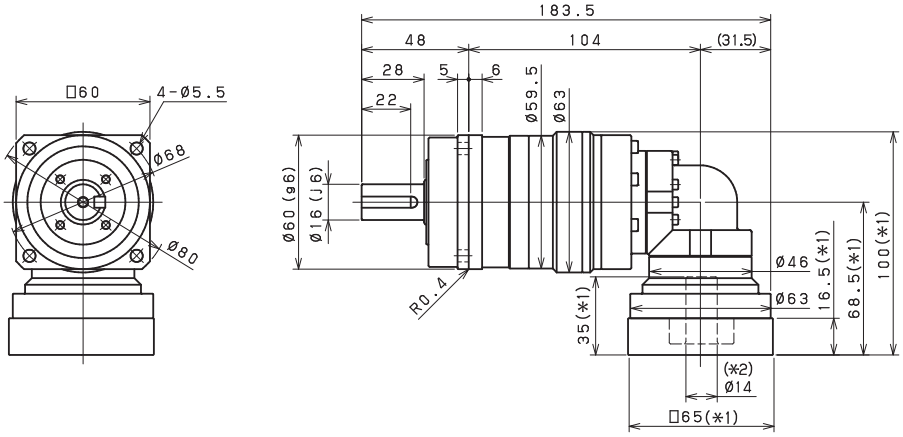

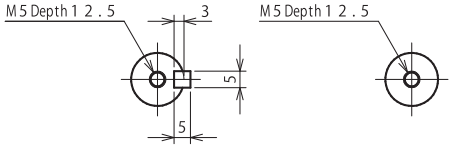

Shaft with key　　Smooth shaft

*1) Length will vary depending on motor

*2) Bushing will be inserted to adapt to motor shaft

EVS-060 – 2-Stage Adapter Dimensions

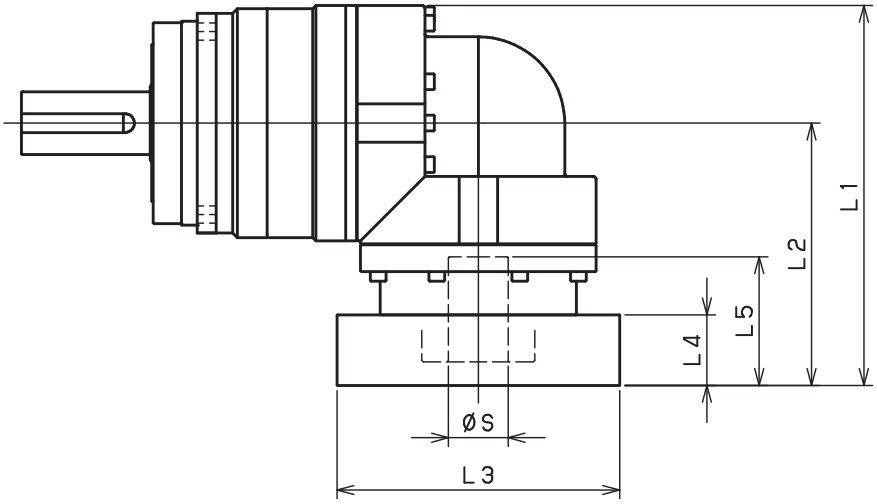

Model number	**: Adapter code	2-Stage				
		L1	L2	L3	L4	L5
EVS-060-□-□-8** (S≦ 8)	AA•AC•AD•AF•AG•AL•AM•AN•AQ	103	71.5	□52	15.5	32
	AB•AE•AH•AJ•AK	108	76.5	□52	20.5	37
	BA•BB•BD•BE•BG•BH•BJ	103	71.5	□60	15.5	32
	BC•BF	108	76.5	□60	20.5	37
	CA	108	76.5	□70	20.5	37
EVS-060-□-□-14** (8< S≦ 14)	BA•BB•BD•BE•BF•BG•BH•BJ•BK•BP	109	77.5	□65	16.5	35
	BC•BH•BM•BN	114	82.5	□65	21.5	40
	BL	119	87.5	□65	26.5	45
	CA•CC	109	77.5	□70	16.5	35
	CB	114	82.5	□70	21.5	40
	DA•DB•DC•DD•DF•DH•DJ	109	77.5	□80	16.5	35
	DE•DL	114	82.5	□80	21.5	40
	DG•DK	119	87.5	□80	26.5	45
	EA•EB•EC•EF•EG•EK•EL	109	77.5	□90	16.5	35
	EJ•EM	114	82.5	□90	21.5	40
	ED•EE•EH	119	87.5	□90	26.5	45
	FA	109	77.5	□100	16.5	35
	FB	119	87.5	□100	26.5	45
EVS-060-□-□-19** (14< S≦ 19)	DA•DB•DC	126	94.5	□80	25	50
	DD	136	104.5	□80	35	60
	DE	131	99.5	□80	30	55
	EA	131	99.5	□90	30	55
	EB•ED	126	94.5	□90	25	50
	EC	136	104.5	□90	35	60
	FA	126	94.5	□100	25	50
	FB	136	104.5	□100	35	60

*1) Double reduction : 1/3~ 1/10

*2) Bushing will be inserted to adapt to motor shaft.

For an explanation on the Adapter Flange Code, please turn to page 422.

A more comprehensive adapter flange offering can be found using the NIDEC-SHIMPO Online Selector Tool. The variety is constantly expanding and being updated on the Selector Tool. If you have any questions or need any support, contact NIDEC-SHIMPO.

EVS-060 – 3-Stage Adapter Dimensions

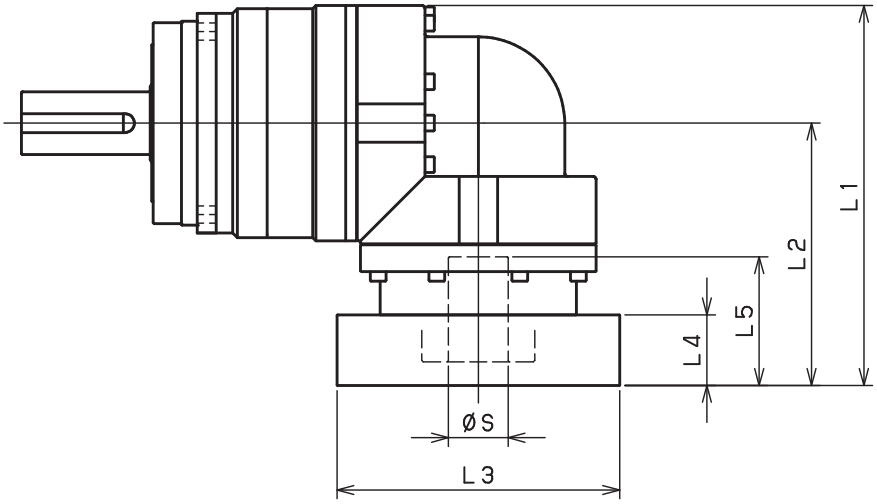

Model number	**: Adapter code	3-Stage				
		L1	L2	L3	L4	L5
EVS-060-□-□-8** (S≦ 8)	AA•AC•AD•AF•AG•AL•AM•AN•AQ	96	64.5	□52	15.5	32
	AB•AE•AH•AJ•AK	101	69.5	□52	20.5	37
	BA•BB•BD•BE•BG•BH•BJ	96	64.5	□60	15.5	32
	BC•BF	101	69.5	□60	20.5	37
	CA	101	69.5	□70	20.5	37
EVS-060-□-□-14** (8< S≦ 14)	BA•BB•BD•BE•BF•BG•BH•BJ•BK•BP	100	68.5	□65	16.5	35
	BC•BH•BM•BN	105	73.5	□65	21.5	40
	BL	110	78.5	□65	26.5	45
	CA•CC	100	68.5	□70	16.5	35
	CB	105	73.5	□70	21.5	40
	DA•DB•DC•DD•DF•DH•DJ	100	68.5	□80	16.5	35
	DE•DL	105	73.5	□80	21.5	40
	DG•DK	110	78.5	□80	26.5	45
	EA•EB•EC•EF•EG•EK•EL	100	68.5	□90	16.5	35
	EJ•EM	105	73.5	□90	21.5	40
	ED•EE•EH	110	78.5	□90	26.5	45
	FA	100	68.5	□100	16.5	35
	FB	110	78.5	□100	26.5	45
EVS-060-□-□-19** (14< S≦ 19)	DA•DB•DC	--	--	--	--	--
	DD	--	--	--	--	--
	DE	--	--	--	--	--
	EA	--	--	--	--	--
	EB•ED	--	--	--	--	--
	EC	--	--	--	--	--
	FA	--	--	--	--	--
	FB	--	--	--	--	--

*1) Triple reduction : 1/15~ 1/100

*2) Bushing will be inserted to adapt to motor shaft.

For an explanation on the Adapter Flange Code, please turn to page 422.

A more comprehensive adapter flange offering can be found using the NIDEC-SHIMPO Online Selector Tool. The variety is constantly expanding and being updated on the Selector Tool. If you have any questions or need any support, contact NIDEC-SHIMPO.

EVS-075 – 2-Stage Specifications

Frame Size	**075**									
Stage	**2-Stage**									
Ratio	Unit	Note	3	4	5	6	7	8	9	10
Nominal Output Torque	[Nm]	*1	45	60	65	65	65	65	45	45
Maximum Acceleration Torque	[Nm]	*2	65	90	90	90	90	90	65	65
Emergency Stop Torque	[Nm]	*3	130	170	220	220	220	220	170	170
Nominal Input Speed	[rpm]	*4	3000							
Maximum Input Speed	[rpm]	*5	6000							
No Load Running Torque	[Nm]	*6	1.13							
Permitted Radial Load	[N]	*7	2300	2500	2700	2800	3000	3100	3200	3300
Permitted Axial Load	[N]	*8	3400	3700	3900	3900	3900	3900	3900	3900
Maximum Radial Load	[N]	*9	4300							
Maximum Axial Load	[N]	*10	3900							
Moment of Inertia (≤ Ø 8)	[kgcm2]	--	--	--	--	--	--	--	--	--
Moment of Inertia (≤ Ø 14)	[kgcm2]	--	2.070	1.870	1.780	1.740	1.720	1.700	1.690	1.690
Moment of Inertia (≤ Ø 19)	[kgcm2]	--	2.400	2.200	2.110	2.070	2.050	2.030	2.020	2.020
Moment of Inertia (≤ Ø 28)	[kgcm2]	--	4.530	4.320	4.240	4.200	4.170	4.160	4.150	4.150
Efficiency	[%]	*11	93							
Torsional Rigidity	[Nm/arc-min]	*12	10							
Maximum Torsional Backlash	[arc-min]	--	≤ 4							
Noise Level	[dB]	*13	80							
Protection Class	--	*14	IP54 (IP65)							
Ambient Temperature	[°C]	--	0-40							
Permitted Housing Temperature	[°C]	--	90							
Weight	[kg]	*15	4.8							

EVS-075 – 3-Stage Specifications

Frame Size	**075**									
Stage	**3-Stage**									
Ratio	Unit	Note	15	16	20	25	28	30	35	40
Nominal Output Torque	[Nm]	*1	45	65	65	65	65	45	65	65
Maximum Acceleration Torque	[Nm]	*2	65	110	110	110	110	65	110	110
Emergency Stop Torque	[Nm]	*3	170	220	220	220	220	170	220	220
Nominal Input Speed	[rpm]	*4	3000							
Maximum Input Speed	[rpm]	*5	6000							
No Load Running Torque	[Nm]	*6	0.55							
Permitted Radial Load	[N]	*7	3700	3800	4000	4300	4300	4300	4300	4300
Permitted Axial Load	[N]	*8	3900	3900	3900	3900	3900	3900	3900	3900
Maximum Radial Load	[N]	*9	4300							
Maximum Axial Load	[N]	*10	3900							
Moment of Inertia (≤ Ø 8)	[kgcm2]	--	0.330	0.380	0.330	0.320	0.370	0.250	0.320	0.250
Moment of Inertia (≤ Ø 14)	[kgcm2]	--	0.410	0.460	0.400	0.400	0.450	0.320	0.400	0.320
Moment of Inertia (≤ Ø 19)	[kgcm2]	--	0.600	0.650	0.590	0.590	0.640	0.510	0.580	0.510
Moment of Inertia (≤ Ø 28)	[kgcm2]	--	--	--	--	--	--	--	--	--
Efficiency	[%]	*11	88							
Torsional Rigidity	[Nm/arc-min]	*12	10							
Maximum Torsional Backlash	[arc-min]	--	≤ 7							
Noise Level	[dB]	*13	80							
Protection Class	--	*14	IP54 (IP65)							
Ambient Temperature	[°C]	--	0-40							
Permitted Housing Temperature	[°C]	--	90							
Weight	[kg]	*15	4.1							

EVS-075 – 3-Stage Specifications

Frame Size	**075**								
Stage	**3-Stage**								
Ratio	Unit	Note	45	50	60	70	80	90	100
Nominal Output Torque	[Nm]	*1	45	65	65	65	65	45	45
Maximum Acceleration Torque	[Nm]	*2	65	110	110	110	110	65	65
Emergency Stop Torque	[Nm]	*3	170	220	220	220	220	170	170
Nominal Input Speed	[rpm]	*4	3000						
Maximum Input Speed	[rpm]	*5	6000						
No Load Running Torque	[Nm]	*6	0.55						
Permitted Radial Load	[N]	*7	4300	4300	4300	4300	4300	4300	4300
Permitted Axial Load	[N]	*8	3900	3900	3900	3900	3900	3900	3900
Maximum Radial Load	[N]	*9	4300						
Maximum Axial Load	[N]	*10	3900						
Moment of Inertia (≤ Ø 8)	[kgcm2]	--	0.320	0.250	0.250	0.250	0.250	0.250	0.250
Moment of Inertia (≤ Ø 14)	[kgcm2]	--	0.390	0.320	0.320	0.320	0.320	0.320	0.320
Moment of Inertia (≤ Ø 19)	[kgcm2]	--	0.580	0.510	0.510	0.510	0.510	0.510	0.510
Moment of Inertia (≤ Ø 28)	[kgcm2]	--	--	--	--	--	--	--	--
Efficiency	[%]	*11	88						
Torsional Rigidity	[Nm/arc-min]	*12	10						
Maximum Torsional Backlash	[arc-min]	--	≤ 7						
Noise Level	[dB]	*13	80						
Protection Class	--	*14	IP54 (IP65)						
Ambient Temperature	[°C]	--	0-40						
Permitted Housing Temperature	[°C]	--	90						
Weight	[kg]	*15	4.1						

*1) At nominal input speed, service life is 20,000 hours
*2) The maximum torque when starting or stopping operation
*3) The maximum torque allowed under a stress situation (Permitted 1,000 times during service life)
*4) The average input speed
*5) The maximum intermittent input speed
*6) This is the torque at no load applied on the input shaft. The input speed is 3000 rpm for EVS075
*7) At this load and nominal input speed, service life will be 20,000 hours. (The radial load applied to the output side bearing)
*8) At this load and nominal input speed, service life will be 20,000 hours. (The axial load applied to the output shaft center)
*9) The maximum radial load that the reducer can accept
*10) The maximum axial load that the reducer can accept
*11) The efficiency at the nominal torque rating
*12) This does not include the lost motion
*13) Contact NIDEC-SHIMPO for the testing conditions and environment
*14) IP65 (wash-down) is available as an option. Contact NIDEC-SHIMPO for more details and our food grade options
*15) The weight may vary slightly between models

EVS-075 – 2-Stage Dimensions

Input shaft bore ≦φ14

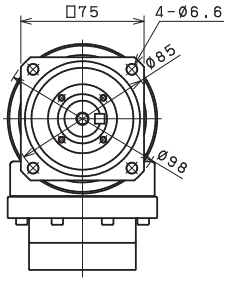

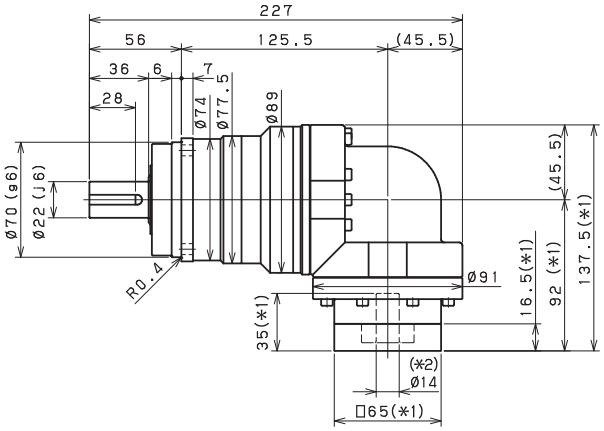

Input shaft bore ≦φ19

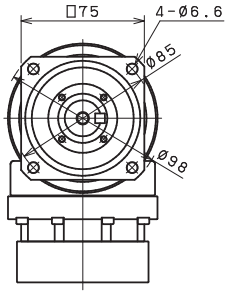

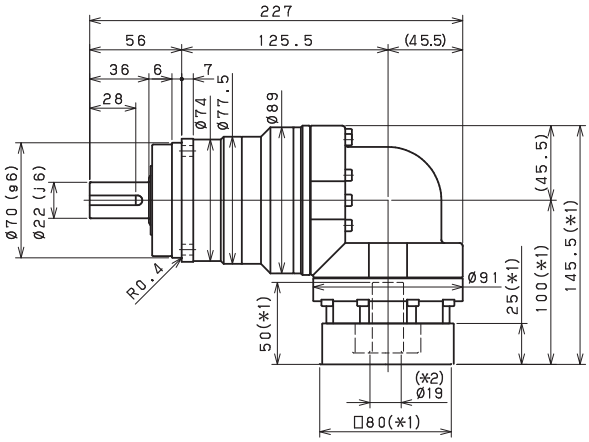

Input shaft bore ≦φ28

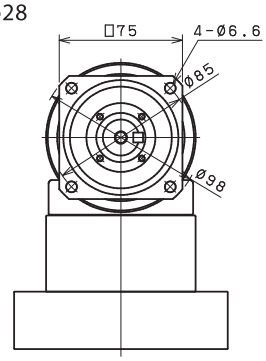

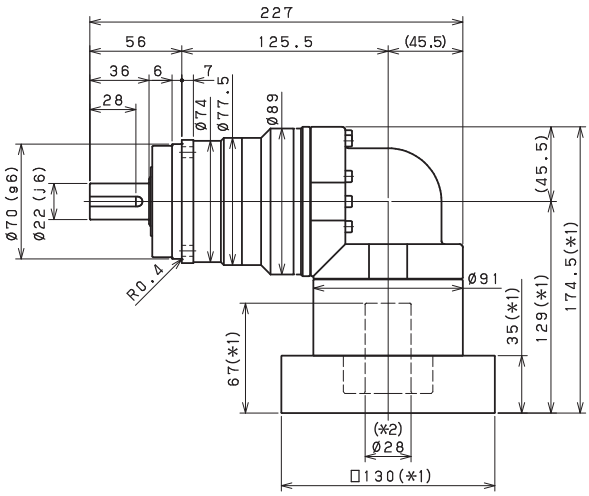

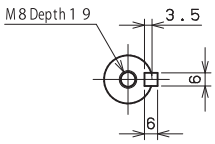

Shaft with key

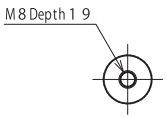

Smooth shaft

*1) Length will vary depending on motor

*2) Bushing will be inserted to adapt to motor shaft

EVS-075 – 3-Stage Dimensions

Input shaft bore ≦φ8

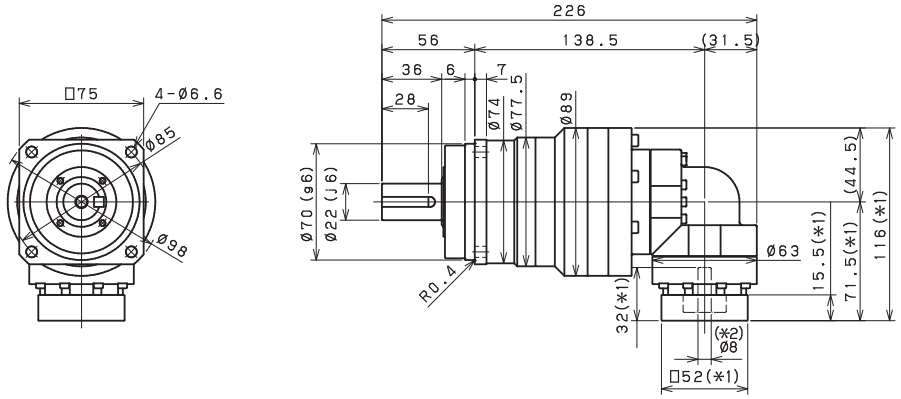

Input shaft bore ≦φ14

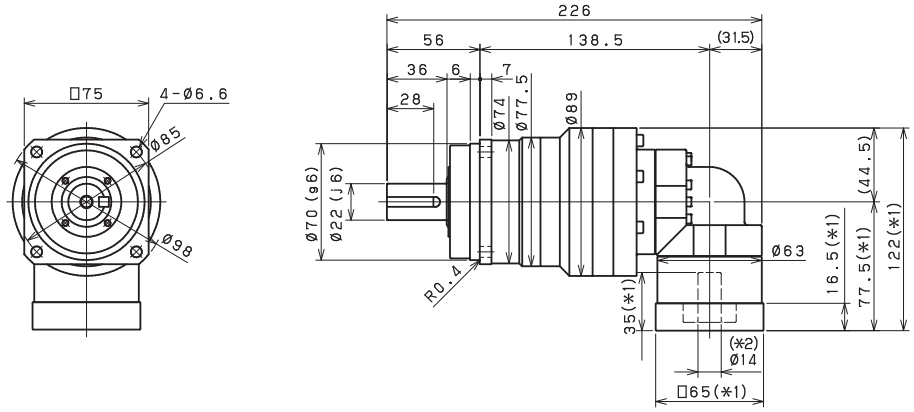

Input shaft bore ≦φ19

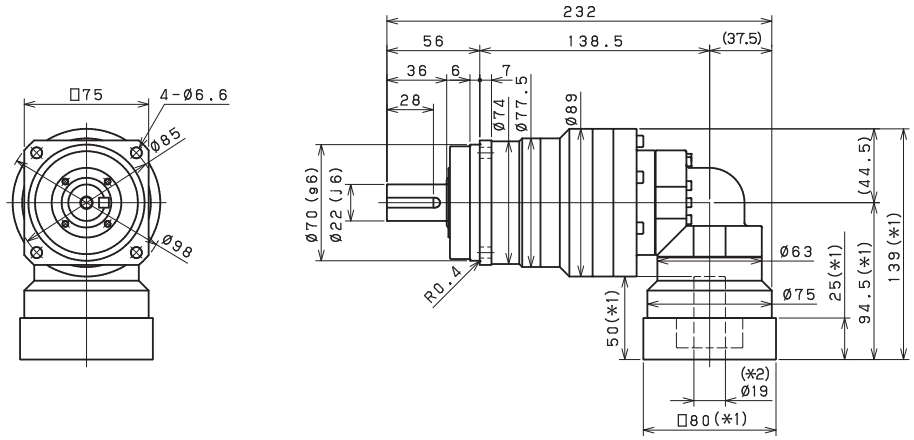

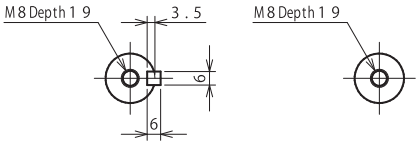

Shaft with key　　Smooth shaft

*1) Length will vary depending on motor

*2) Bushing will be inserted to adapt to motor shaft

EVS-075 – 2-Stage Adapter Dimensions

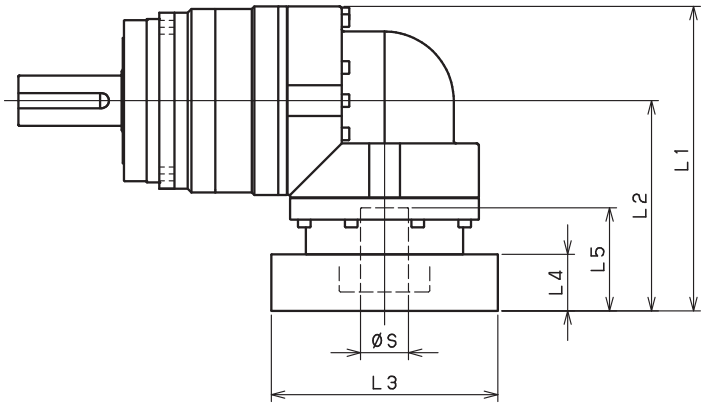

Model number	**: Adapter code	2-Stage				
		L1	L2	L3	L4	L5
EVS-075-□-□-8** (S≦8)	AA•AC•AD•AF•AG•AL•AM•AN•AQ	--	--	--	--	--
	AB•AE•AH•AJ•AK	--	--	--	--	--
	BA•BB•BD•BE•BG•BH•BJ	--	--	--	--	--
	CA	--	--	--	--	--
EVS-075-□-□-14** (8< S≦14)	BA•BB•BD•BE•BF•BG•BH•BJ•BK•BP	137.5	92	□65	16.5	35
	BC•BH•BM•BN	142.5	97	□65	21.5	40
	CA•CC	137.5	92	□70	16.5	35
	DA•DB•DC•DD•DF•DH•DJ	137.5	92	□80	16.5	35
	EA•EB•EC•EF•EG•EK•EL	137.5	92	□90	16.5	35
	FA	137.5	92	□100	16.5	35
	FB	147.5	102	□100	26.5	45
	JA	152.5	107	□150	31.5	50
EVS-075-□-□-19** (14< S≦19)	DA•DB•DC	145.5	100	□80	25	50
	EB•ED	145.5	100	□90	25	50
	FA	145.5	100	□100	25	50
	FB	155.5	110	□100	35	60
	GA•GC•GH	150.5	105	□115	30	55
	GB•GD•GJ	145.5	100	□115	25	50
	GE•GF	155.5	110	□115	35	60
	HA	145.5	100	□130	25	50
	HB	160.5	115	□130	40	65
	HC•HD•HE	150.5	105	□130	30	55
	JA	155.5	110	□150	35	60
	JB	160.5	115	□150	40	65
EVS-075-□-□-28** (19< S≦28)	FA•FB•FC	174.5	129	□100	35	67
	FD•FE	169.5	124	□100	30	62
	GA•GB•GC•GD•GE•GF•GG•GH	174.5	129	□115	35	67
	HA•HC•HD	174.5	129	□130	35	67
	HB	184.5	139	□130	45	77
	HE	189.5	144	□130	50	82
	HF	169.5	124	□130	30	62
	JA•JB•JC•JF	174.5	129	□150	35	67
	JD	194.5	149	□150	55	87
	JE	184.5	139	□150	45	77

*1) Double reduction : 1/3~ 1/10 *2) Bushing will be inserted to adapt to motor shaft

For an explanation on the Adapter Flange Code, please turn to page 422.

A more comprehensive adapter flange offering can be found using the NIDEC-SHIMPO Online Selector Tool. The variety is constantly expanding and being updated on the Selector Tool. If you have any questions or need any support, contact NIDEC-SHIMPO.

EVS-075 – 3-Stage Adapter Dimensions

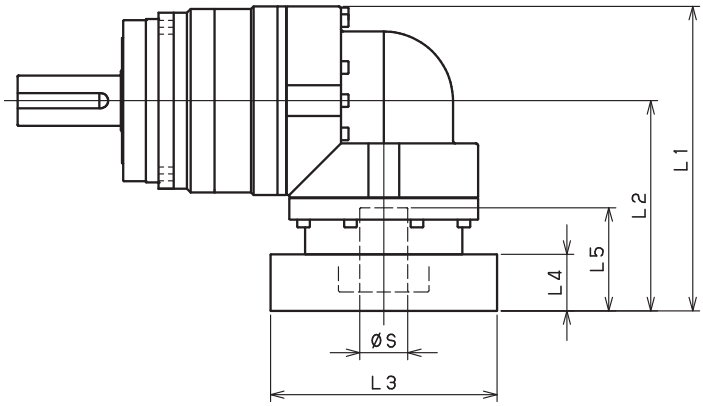

Model number	**: Adapter code	3-Stage				
		L1	L2	L3	L4	L5
EVS-075-□-□-8** (S≦ 8)	AA•AC•AD•AF•AG•AL•AM•AN•AQ	116	71.5	□52	15.5	32
	AB•AE•AH•AJ•AK	121	76.5	□52	20.5	37
	BA•BB•BD•BE•BG•BH•BJ	116	71.5	□60	15.5	32
	CA	121	76.5	□70	20.5	37
EVS-075-□-□-14** (8< S≦ 14)	BA•BB•BD•BE•BF•BG•BH•BJ•BK•BP	122	77.5	□65	16.5	35
	BC•BH•BM•BN	127	82.5	□65	21.5	40
	CA•CC	122	77.5	□70	16.5	35
	DA•DB•DC•DD•DF•DH•DJ	122	77.5	□80	16.5	35
	EA•EB•EC•EF•EG•EK•EL	122	77.5	□90	16.5	35
	FA	122	77.5	□100	16.5	35
	FB	132	87.5	□100	26.5	45
	JA	137	92.5	□150	31.5	50
EVS-075-□-□-19** (14< S≦ 19)	DA•DB•DC	139	94.5	□80	25	50
	EB•ED	139	94.5	□90	25	50
	FA	139	94.5	□100	25	50
	FB	149	104.5	□100	35	60
	GA•GC•GH	144	99.5	□115	30	55
	GB•GD•GJ	139	94.5	□115	25	50
	GE•GF	149	104.5	□115	35	60
	HA	139	94.5	□130	25	50
	HB	154	109.5	□130	40	65
	HC•HD•HE	144	99.5	□130	30	55
	JA	149	104.5	□150	35	60
	JB	154	109.5	□150	40	65
EVS-075-□-□-28** (19< S≦ 28)	FA•FB•FC	--	--	--	--	--
	FD•FE	--	--	--	--	--
	GA•GB•GC•GD•GE•GF•GG•GH	--	--	--	--	--
	HA•HC•HD	--	--	--	--	--
	HB	--	--	--	--	--
	HE	--	--	--	--	--
	HF	--	--	--	--	--
	JA•JB•JC•JF	--	--	--	--	--
	JD	--	--	--	--	--
	JE	--	--	--	--	--

*1) Triple reduction : 1/15~ 1/100 *2) Bushing will be inserted to adapt to motor shaft

For an explanation on the Adapter Flange Code, please turn to page 422.

A more comprehensive adapter flange offering can be found using the NIDEC-SHIMPO Online Selector Tool. The variety is constantly expanding and being updated on the Selector Tool. If you have any questions or need any support, contact NIDEC-SHIMPO.

EVS-100 – 2-Stage Specifications

Frame Size	**100**									
Stage	**2-Stage**									
Ratio	Unit	Note	3	4	5	6	7	8	9	10
Nominal Output Torque	[Nm]	*1	75	100	120	150	150	150	110	110
Maximum Acceleration Torque	[Nm]	*2	150	200	240	300	300	300	200	200
Emergency Stop Torque	[Nm]	*3	320	430	500	550	550	550	450	450
Nominal Input Speed	[rpm]	*4	3000							
Maximum Input Speed	[rpm]	*5	6000							
No Load Running Torque	[Nm]	*6	1.88							
Permitted Radial Load	[N]	*7	3400	3700	4000	4200	4400	4600	4800	4900
Permitted Axial Load	[N]	*8	4800	5200	5600	5900	6100	6300	6300	6300
Maximum Radial Load	[N]	*9	7000							
Maximum Axial Load	[N]	*10	6300							
Moment of Inertia (≤ Ø 14)	[kgcm2]	--	--	--	--	--	--	--	--	--
Moment of Inertia (≤ Ø 19)	[kgcm2]	--	6.610	5.410	4.970	4.730	4.620	4.530	4.470	4.450
Moment of Inertia (≤ Ø 28)	[kgcm2]	--	8.210	7.010	6.570	6.330	6.220	6.120	6.070	6.040
Moment of Inertia (≤ Ø 38)	[kgcm2]	--	15.280	14.080	13.640	13.400	13.290	13.200	13.140	13.110
Efficiency	[%]	*11	93							
Torsional Rigidity	[Nm/arc-min]	*12	31							
Maximum Torsional Backlash	[arc-min]	--	≤ 4							
Noise Level	[dB]	*13	85							
Protection Class	--	*14	IP54 (IP65)							
Ambient Temperature	[°C]	--	0-40							
Permitted Housing Temperature	[°C]	--	90							
Weight	[kg]	*15	10.5							

EVS-100 – 3-Stage Specifications

Frame Size	**100**									
Stage	**3-Stage**									
Ratio	Unit	Note	15	16	20	25	28	30	35	40
Nominal Output Torque	[Nm]	*1	110	130	150	150	150	110	150	150
Maximum Acceleration Torque	[Nm]	*2	200	260	300	300	300	200	300	300
Emergency Stop Torque	[Nm]	*3	450	550	550	550	550	450	550	550
Nominal Input Speed	[rpm]	*4	3000							
Maximum Input Speed	[rpm]	*5	6000							
No Load Running Torque	[Nm]	*6	1.11							
Permitted Radial Load	[N]	*7	5600	5700	6100	6500	6700	6900	7000	7000
Permitted Axial Load	[N]	*8	6300	6300	6300	6300	6300	6300	6300	6300
Maximum Radial Load	[N]	*9	7000							
Maximum Axial Load	[N]	*10	6300							
Moment of Inertia (≤ Ø 14)	[kgcm2]	--	2.240	2.450	2.190	2.180	2.400	1.870	2.160	1.860
Moment of Inertia (≤ Ø 19)	[kgcm2]	--	2.570	2.780	2.520	2.510	2.730	2.200	2.490	2.190
Moment of Inertia (≤ Ø 28)	[kgcm2]	--	4.700	4.910	4.650	4.630	4.860	4.330	4.620	4.320
Moment of Inertia (≤ Ø 38)	[kgcm2]	--	--	--	--	--	--	--	--	--
Efficiency	[%]	*11	88							
Torsional Rigidity	[Nm/arc-min]	*12	31							
Maximum Torsional Backlash	[arc-min]	--	≤ 7							
Noise Level	[dB]	*13	85							
Protection Class	--	*14	IP54 (IP65)							
Ambient Temperature	[°C]	--	0-40							
Permitted Housing Temperature	[°C]	--	90							
Weight	[kg]	*15	10.1							

EVS-100 – 3-Stage Specifications

Frame Size	**100**								
Stage	**3-Stage**								
Ratio	Unit	Note	45	50	60	70	80	90	100
Nominal Output Torque	[Nm]	*1	110	150	150	150	150	110	110
Maximum Acceleration Torque	[Nm]	*2	200	300	300	300	300	200	200
Emergency Stop Torque	[Nm]	*3	450	550	550	550	550	450	450
Nominal Input Speed	[rpm]	*4	3000						
Maximum Input Speed	[rpm]	*5	6000						
No Load Running Torque	[Nm]	*6	1.11						
Permitted Radial Load	[N]	*7	7000	7000	7000	7000	7000	7000	7000
Permitted Axial Load	[N]	*8	6300	6300	6300	6300	6300	6300	6300
Maximum Radial Load	[N]	*9	7000						
Maximum Axial Load	[N]	*10	6300						
Moment of Inertia (≤ Ø 14)	[kgcm2]	--	2.150	1.860	1.850	1.850	1.850	1.850	1.850
Moment of Inertia (≤ Ø 19)	[kgcm2]	--	2.480	2.190	2.180	2.180	2.180	2.180	2.180
Moment of Inertia (≤ Ø 28)	[kgcm2]	--	4.610	4.310	4.310	4.310	4.310	4.310	4.310
Moment of Inertia (≤ Ø 38)	[kgcm2]	--	--	--	--	--	--	--	--
Efficiency	[%]	*11	88						
Torsional Rigidity	[Nm/arc-min]	*12	31						
Maximum Torsional Backlash	[arc-min]	--	≤ 7						
Noise Level	[dB]	*13	85						
Protection Class	--	*14	IP54 (IP65)						
Ambient Temperature	[°C]	--	0-40						
Permitted Housing Temperature	[°C]	--	90						
Weight	[kg]	*15	10.1						

*1) At nominal input speed, service life is 20,000 hours
*2) The maximum torque when starting or stopping operation
*3) The maximum torque allowed under a stress situation (Permitted 1,000 times during service life)
*4) The average input speed
*5) The maximum intermittent input speed
*6) This is the torque at no load applied on the input shaft. The input speed is 3000 rpm for EVS100
*7) At this load and nominal input speed, service life will be 20,000 hours. (The radial load applied to the output side bearing)
*8) At this load and nominal input speed, service life will be 20,000 hours. (The axial load applied to the output shaft center)
*9) The maximum radial load that the reducer can accept
*10) The maximum axial load that the reducer can accept
*11) The efficiency at the nominal torque rating
*12) This does not include the lost motion
*13) Contact NIDEC-SHIMPO for the testing conditions and environment
*14) IP65 (wash-down) is available as an option. Contact NIDEC-SHIMPO for more details and our food grade options
*15) The weight may vary slightly between models

EVS-100 – 2-Stage Dimensions

Input shaft bore ≦φ19

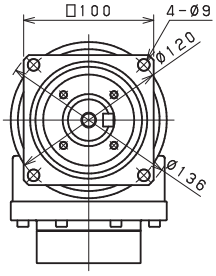

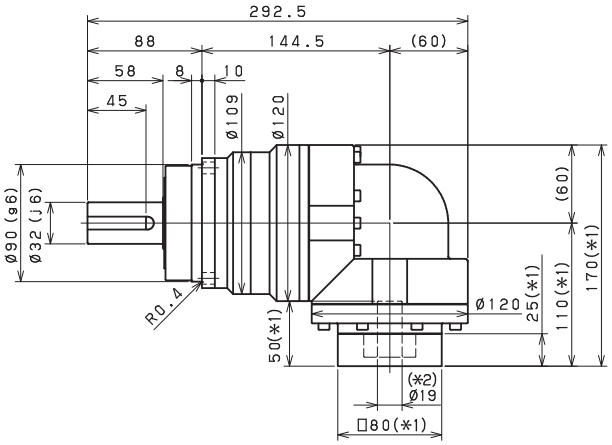

Input shaft bore ≦φ28

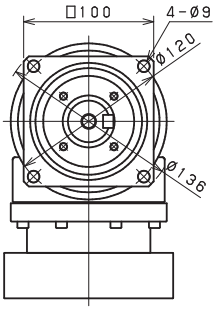

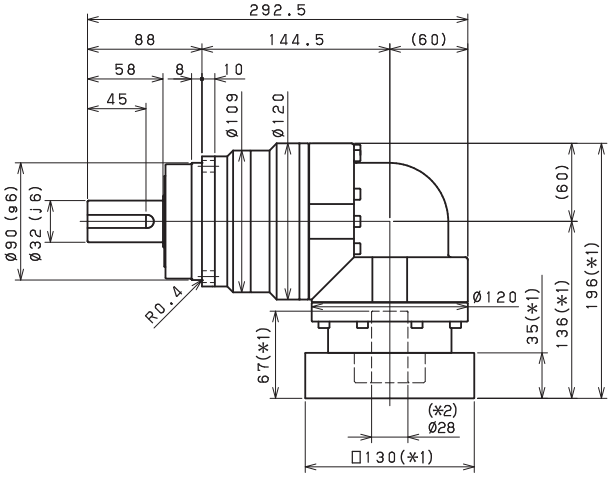

Input shaft bore ≦φ38

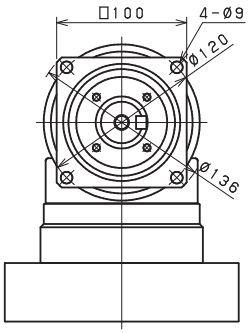

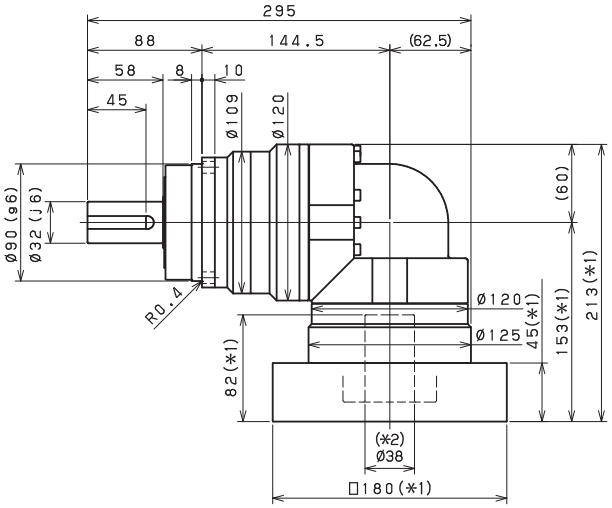

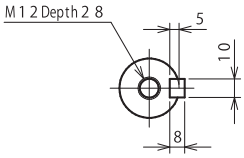

Shaft with key

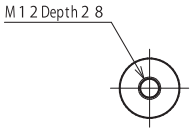

Smooth shaft

*1) Length will vary depending on motor

*2) Bushing will be inserted to adapt to motor shaft

EVS-100 – 3-Stage Dimensions

Input shaft bore ≦φ14

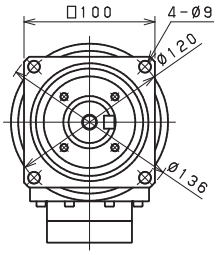

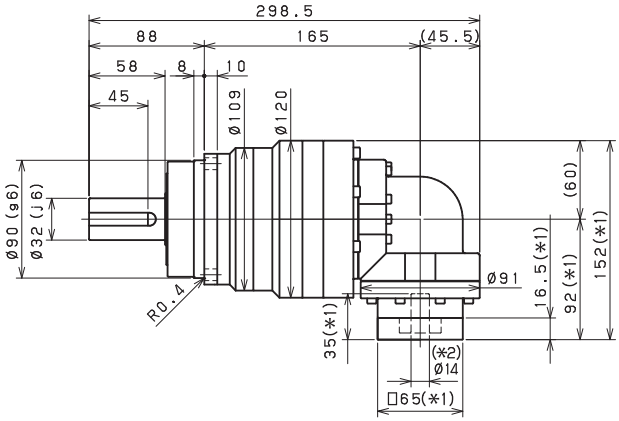

Input shaft bore ≦φ19

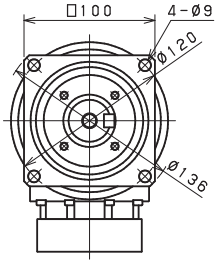

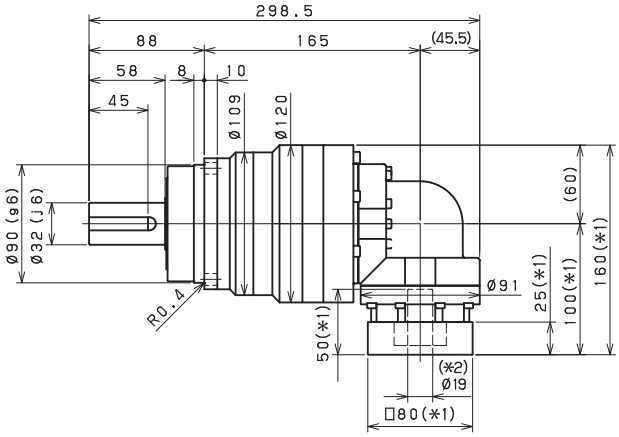

Input shaft bore ≦φ28

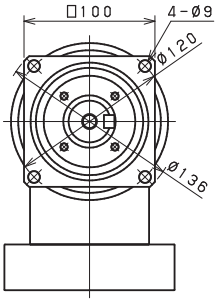

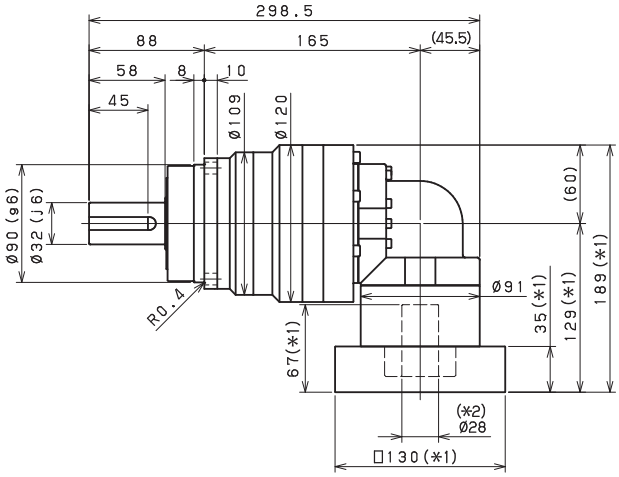

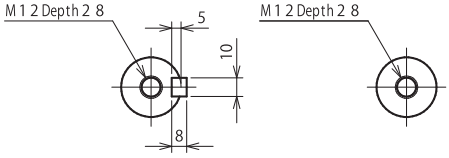

Shaft with key　　Smooth shaft

*1) Length will vary depending on motor

*2) Bushing will be inserted to adapt to motor shaft

EVS-100 – 2-Stage Adapter Dimensions

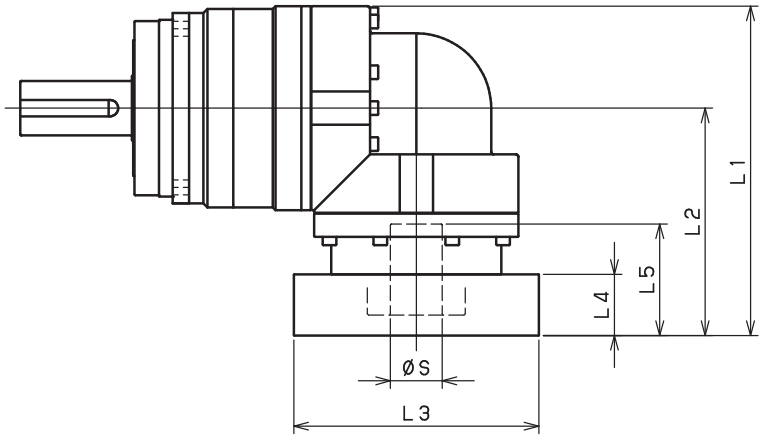

Model number	**: Adapter code	2-Stage				
		L1	L2	L3	L4	L5
EVS-100-□-□-14** (S≦ 14)	BA•BB•BD•BE•BF•BG•BH•BJ•BK•BP	--	--	--	--	--
	BC•BH•BM•BN	--	--	--	--	--
	CA•CC	--	--	--	--	--
	DA•DB•DC•DD•DF•DH•DJ	--	--	--	--	--
	EA•EB•EC•EF•EG•EK•EL	--	--	--	--	--
	FA	--	--	--	--	--
	FB	--	--	--	--	--
	JA	--	--	--	--	--
EVS-100-□-□-19** (14< S≦ 19)	DA•DB•DC	170	110	□80	25	50
	EB•ED	170	110	□90	25	50
	FA	170	110	□100	25	50
	FB	180	120	□100	35	60
	GB•GD•GJ	170	110	□115	25	50
	HA	170	110	□130	25	50
	HB	185	125	□130	40	65
	JA	180	120	□150	35	60
EVS-100-□-□-28** (19< S≦ 28)	FA•FB•FC	196	136	□100	35	67
	FD•FE	191	131	□100	30	62
	GA•GB•GC•GD•GE•GF•GG•GH	196	136	□115	35	67
	HA•HC•HD	196	136	□130	35	67
	HB	206	146	□130	45	77
	HE	211	151	□130	50	82
	HF	191	131	□130	30	62
	JA•JB•JC•JF	196	136	□150	35	67
	JD	216	156	□150	55	87
	JE	206	146	□150	45	77
	KA•KB•KE	196	136	□180	35	67
	KD	206	146	□180	45	77
EVS-100-□-□-38** (28< S≦ 38)	HA	213	153	□130	45	82
	HB•HE	208	148	□130	40	77
	JA	213	153	□150	45	82
	KA•KB•KC	213	153	□180	45	82
	KD	248	188	□180	80	117
	KE	228	168	□180	60	97

*1) Double reduction : 1/3~ 1/10 *2) Bushing will be inserted to adapt to motor shaft

For an explanation on the Adapter Flange Code, please turn to page 422.

A more comprehensive adapter flange offering can be found using the NIDEC-SHIMPO Online Selector Tool. The variety is constantly expanding and being updated on the Selector Tool. If you have any questions or need any support, contact NIDEC-SHIMPO.

EVS-100 – 3-Stage Adapter Dimensions

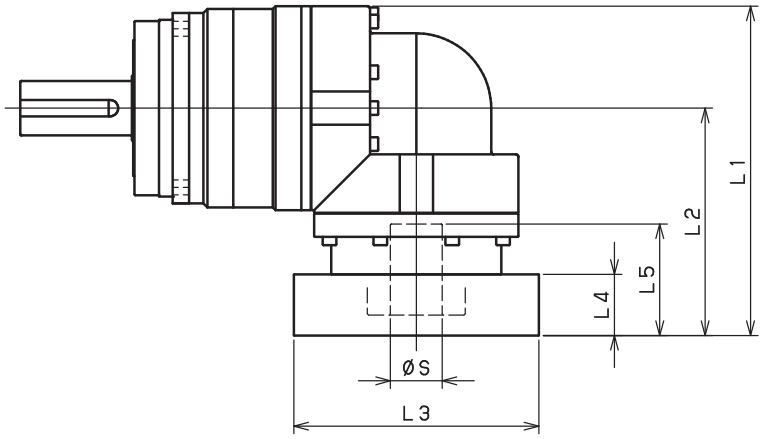

Model number	**: Adapter code	3-Stage				
		L1	L2	L3	L4	L5
EVS-100-□-□-14** (S≦ 14)	BA•BB•BD•BE•BF•BG•BH•BJ•BK•BP	152	92	□65	16.5	35
	BC•BH•BM•BN	157	97	□65	21.5	40
	CA•CC	152	92	□70	16.5	35
	DA•DB•DC•DD•DF•DH•DJ	152	92	□80	16.5	35
	EA•EB•EC•EF•EG•EK•EL	152	92	□90	16.5	35
	FA	152	92	□100	16.5	35
	FB	162	102	□100	26.5	45
	JA	167	107	□150	31.5	50
EVS-100-□-□-19** (14< S≦ 19)	DA•DB•DC	160	100	□80	25	50
	EB•ED	160	100	□90	25	50
	FA	160	100	□100	25	50
	FB	170	110	□100	35	60
	GB•GD•GJ	160	100	□115	25	50
	HA	160	100	□130	25	50
	HB	175	115	□130	40	65
	JA	170	110	□150	35	60
EVS-100-□-□-28** (19< S≦ 28)	FA•FB•FC	189	129	□100	35	67
	FD•FE	184	124	□100	30	62
	GA•GB•GC•GD•GE•GF•GG•GH	189	129	□115	35	67
	HA•HC•HD	189	129	□130	35	67
	HB	199	139	□130	45	77
	HE	204	144	□130	50	82
	HF	184	124	□130	30	62
	JA•JB•JC•JF	189	129	□150	35	67
	JD	209	149	□150	55	87
	JE	199	139	□150	45	77
	KA•KB•KE	189	129	□180	35	67
	KD	199	139	□180	45	77
EVS-100-□-□-38** (28< S≦ 38)	HA	--	--	--	--	--
	HB•HE	--	--	--	--	--
	JA	--	--	--	--	--
	KA•KB•KC	--	--	--	--	--
	KD	--	--	--	--	--
	KE	--	--	--	--	--

*1) Triple reduction : 1/15~ 1/100 *2) Bushing will be inserted to adapt to motor shaft

For an explanation on the Adapter Flange Code, please turn to page 422.

A more comprehensive adapter flange offering can be found using the NIDEC-SHIMPO Online Selector Tool. The variety is constantly expanding and being updated on the Selector Tool. If you have any questions or need any support, contact NIDEC-SHIMPO.

EVS-140 – 2-Stage Specifications

Frame Size	**140**									
Stage	**2-Stage**									
Ratio	Unit	Note	3	4	5	6	7	8	9	10
Nominal Output Torque	[Nm]	*1	130	170	200	260	300	300	200	200
Maximum Acceleration Torque	[Nm]	*2	260	340	400	520	600	600	400	400
Emergency Stop Torque	[Nm]	*3	700	950	1100	1100	1100	1100	750	750
Nominal Input Speed	[rpm]	*4	2000							
Maximum Input Speed	[rpm]	*5	4000							
No Load Running Torque	[Nm]	*6	3.26							
Permitted Radial Load	[N]	*7	6700	7400	7900	8300	8700	9100	9400	9700
Permitted Axial Load	[N]	*8	9000	9000	9000	9000	9000	9000	9000	9000
Maximum Radial Load	[N]	*9	10000							
Maximum Axial Load	[N]	*10	9000							
Moment of Inertia (≤ Ø 19)	[kgcm2]	--	--	--	--	--	--	--	--	--
Moment of Inertia (≤ Ø 28)	[kgcm2]	--	23.010	18.490	16.850	15.970	15.550	15.210	14.750	14.640
Moment of Inertia (≤ Ø 38)	[kgcm2]	--	27.380	22.860	21.220	20.340	19.920	19.580	19.120	19.020
Moment of Inertia (≤ Ø 48)	[kgcm2]	--	40.610	36.090	34.450	33.570	33.150	32.810	32.250	32.250
Efficiency	[%]	*11	93							
Torsional Rigidity	[Nm/arc-min]	*12	60							
Maximum Torsional Backlash	[arc-min]	--	≤ 4							
Noise Level	[dB]	*13	85							
Protection Class	--	*14	IP54 (IP65)							
Ambient Temperature	[°C]	--	0-40							
Permitted Housing Temperature	[°C]	--	90							
Weight	[kg]	*15	20.6							

EVS-140 – 3-Stage Specifications

Frame Size	**140**									
Stage	**3-Stage**									
Ratio	Unit	Note	15	16	20	25	28	30	35	40
Nominal Output Torque	[Nm]	*1	200	300	300	300	300	200	300	300
Maximum Acceleration Torque	[Nm]	*2	400	600	600	600	600	400	600	600
Emergency Stop Torque	[Nm]	*3	750	1100	1100	1100	1100	750	1100	1100
Nominal Input Speed	[rpm]	*4	2000							
Maximum Input Speed	[rpm]	*5	4000							
No Load Running Torque	[Nm]	*6	2.56							
Permitted Radial Load	[N]	*7	10000	10000	10000	10000	10000	10000	10000	10000
Permitted Axial Load	[N]	*8	9000	9000	9000	9000	9000	9000	9000	9000
Maximum Radial Load	[N]	*9	10000							
Maximum Axial Load	[N]	*10	9000							
Moment of Inertia (≤ Ø 19)	[kgcm2]	--	6.400	7.290	6.220	6.150	7.090	4.990	6.090	4.940
Moment of Inertia (≤ Ø 28)	[kgcm2]	--	7.990	8.880	7.810	7.750	8.680	6.580	7.680	6.540
Moment of Inertia (≤ Ø 38)	[kgcm2]	--	15.060	15.950	14.880	14.820	15.750	13.660	14.760	13.610
Moment of Inertia (≤ Ø 48)	[kgcm2]	--	--	--	--	--	--	--	--	--
Efficiency	[%]	*11	88							
Torsional Rigidity	[Nm/arc-min]	*12	60							
Maximum Torsional Backlash	[arc-min]	--	≤ 7							
Noise Level	[dB]	*13	85							
Protection Class	--	*14	IP54 (IP65)							
Ambient Temperature	[°C]	--	0-40							
Permitted Housing Temperature	[°C]	--	90							
Weight	[kg]	*15	20.7							

EVS-140 – 3-Stage Specifications

Frame Size	**140**								
Stage	**3-Stage**								
Ratio	Unit	Note	45	50	60	70	80	90	100
Nominal Output Torque	[Nm]	*1	200	300	300	300	300	200	200
Maximum Acceleration Torque	[Nm]	*2	400	600	600	600	600	400	400
Emergency Stop Torque	[Nm]	*3	750	1100	1100	1100	1100	750	750
Nominal Input Speed	[rpm]	*4	2000						
Maximum Input Speed	[rpm]	*5	4000						
No Load Running Torque	[Nm]	*6	2.56						
Permitted Radial Load	[N]	*7	10000	10000	10000	10000	10000	10000	10000
Permitted Axial Load	[N]	*8	9000	9000	9000	9000	9000	9000	9000
Maximum Radial Load	[N]	*9	10000						
Maximum Axial Load	[N]	*10	9000						
Moment of Inertia (≤ Ø 19)	[kgcm2]	--	6.070	4.930	4.920	4.910	4.910	4.910	4.910
Moment of Inertia (≤ Ø 28)	[kgcm2]	--	7.660	6.520	6.510	6.510	6.500	6.500	6.500
Moment of Inertia (≤ Ø 38)	[kgcm2]	--	14.730	13.590	13.590	13.580	13.580	13.570	13.570
Moment of Inertia (≤ Ø 48)	[kgcm2]	--	--	--	--	--	--	--	--
Efficiency	[%]	*11	88						
Torsional Rigidity	[Nm/arc-min]	*12	60						
Maximum Torsional Backlash	[arc-min]	--	≤ 7						
Noise Level	[dB]	*13	85						
Protection Class	--	*14	IP54 (IP65)						
Ambient Temperature	[°C]	--	0-40						
Permitted Housing Temperature	[°C]	--	90						
Weight	[kg]	*15	20.7						

*1) At nominal input speed, service life is 20,000 hours
*2) The maximum torque when starting or stopping operation
*3) The maximum torque allowed under a stress situation (Permitted 1,000 times during service life)
*4) The average input speed
*5) The maximum intermittent input speed
*6) This is the torque at no load applied on the input shaft. The input speed is 2000 rpm for EVS140
*7) At this load and nominal input speed, service life will be 20,000 hours. (The radial load applied to the output side bearing)
*8) At this load and nominal input speed, service life will be 20,000 hours. (The axial load applied to the output shaft center)
*9) The maximum radial load that the reducer can accept
*10) The maximum axial load that the reducer can accept
*11) The efficiency at the nominal torque rating
*12) This does not include the lost motion
*13) Contact NIDEC-SHIMPO for the testing conditions and environment
*14) IP65 (wash-down) is available as an option. Contact NIDEC-SHIMPO for more details and our food grade options
*15) The weight may vary slightly between models

EVS-140 – 2-Stage Dimensions

Input shaft bore ≦φ28

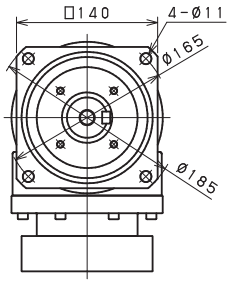

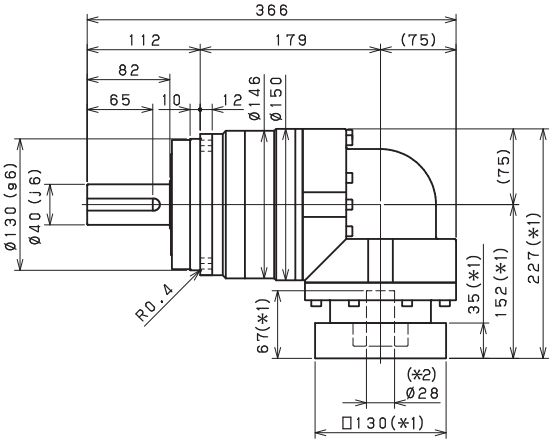

Input shaft bore ≦φ38

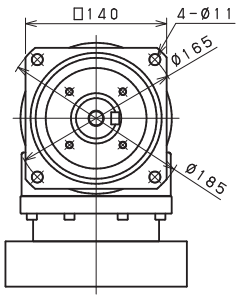

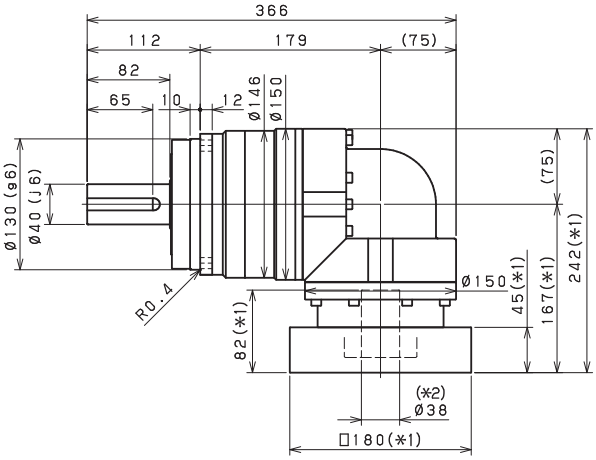

Input shaft bore ≦φ48

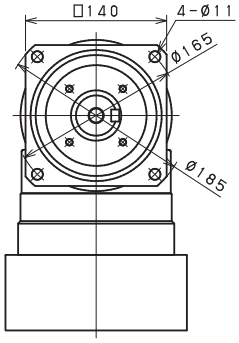

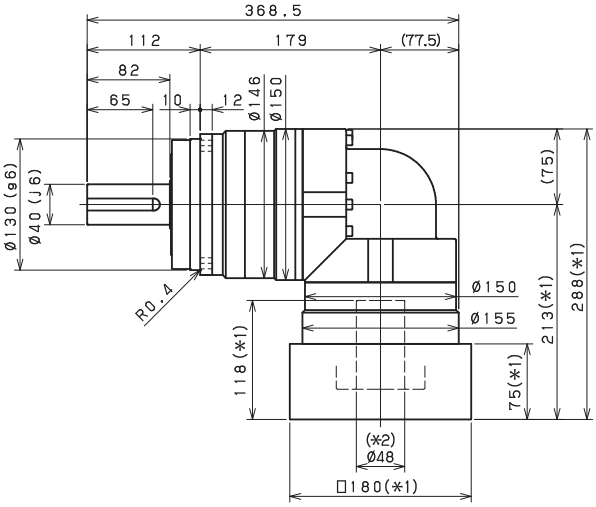

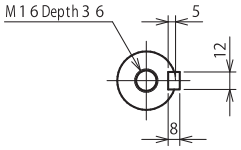

Shaft with key

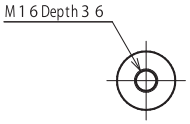

Smooth shaft

*1) Length will vary depending on motor

*2) Bushing will be inserted to adapt to motor shaft

EVS-140 – 3-Stage Dimensions

Input shaft bore ≦φ19

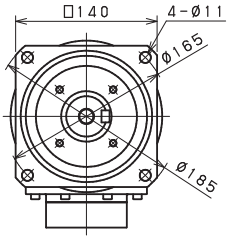

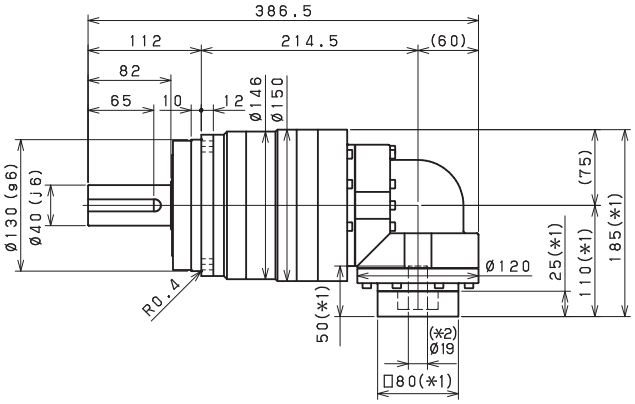

Input shaft bore ≦φ28

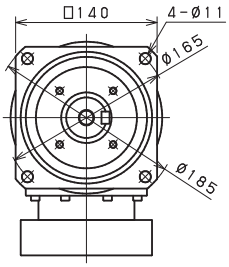

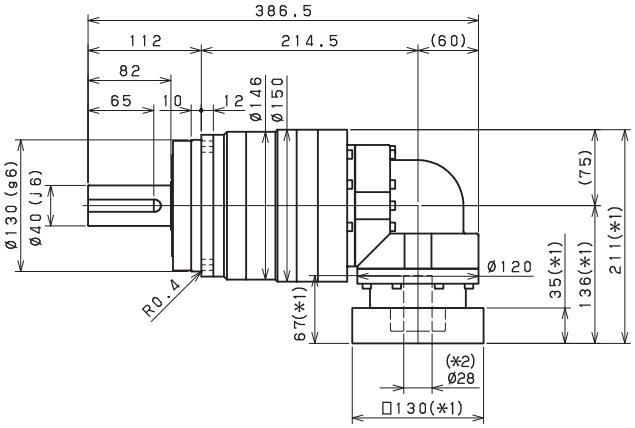

Input shaft bore ≦φ38

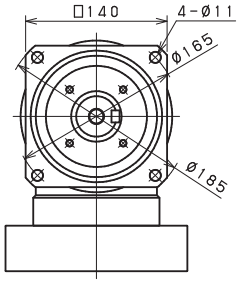

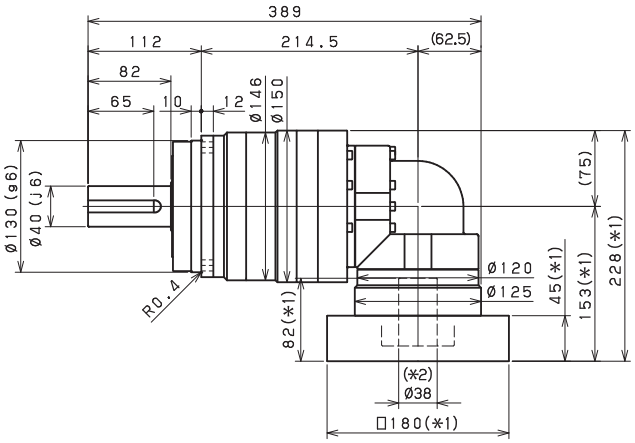

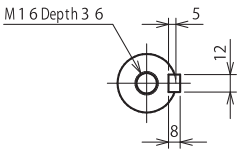

Shaft with key

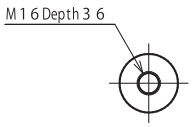

Smooth shaft

*1) Length will vary depending on motor

*2) Bushing will be inserted to adapt to motor shaft

EVS-140 – 2-Stage Adapter Dimensions

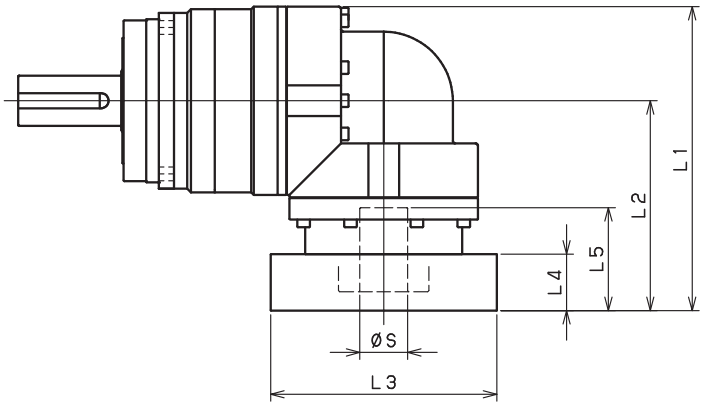

Model number	**: Adapter code	2-Stage				
		L1	L2	L3	L4	L5
EVS-140-□-□-19** (S≦ 19)	DA•DB•DC	--	--	--	--	--
	EB•ED	--	--	--	--	--
	FA	--	--	--	--	--
	FB	--	--	--	--	--
	GB•GD•GJ	--	--	--	--	--
	HA	--	--	--	--	--
	HB	--	--	--	--	--
	JA	--	--	--	--	--
EVS-140-□-□-28** (19≦ S≦ 28)	FA•FB•FC	227	152	□100	35	67
	GA•GB•GC•GD•GE•GF•GG•GH	227	152	□115	35	67
	HA•HC•HD	227	152	□130	35	67
	HB	237	162	□130	45	77
	HF	222	147	□130	30	62
	JA•JB•JC•JF	227	152	□150	35	67
	KA•KB•KE	227	152	□180	35	67
	LA	227	152	□200	35	67
	LB	237	162	□200	45	77
	MA	227	152	□220	35	67
	MB	237	162	□220	45	77
EVS-140-□-□-38** (28< S≦ 38)	HA	242	167	□130	45	82
	HB•HE	237	162	□130	40	77
	JA	242	167	□150	45	82
	KA•KB•KC	242	167	□180	45	82
	KD	277	202	□180	80	117
	KE	257	182	□180	60	97
	LB	252	177	□200	55	92
	MA•MB	242	167	□220	45	82
	MC	257	182	□220	60	97
	MD	252	177	□220	55	92
EVS-140-□-□-48** (38< S≦ 48)	KA	288	213	□180	75	118
	KB•KC	268	193	□180	55	98
	LA	268	193	□200	55	98
	MA	268	193	□220	55	98
	MB	288	213	□220	75	118

*1) Double reduction : 1/3~ 1/10 *2) Bushing will be inserted to adapt to motor shaft

For an explanation on the Adapter Flange Code, please turn to page 422.

A more comprehensive adapter flange offering can be found using the NIDEC-SHIMPO Online Selector Tool. The variety is constantly expanding and being updated on the Selector Tool. If you have any questions or need any support, contact NIDEC-SHIMPO.

EVS-140 – 3-Stage Adapter Dimensions

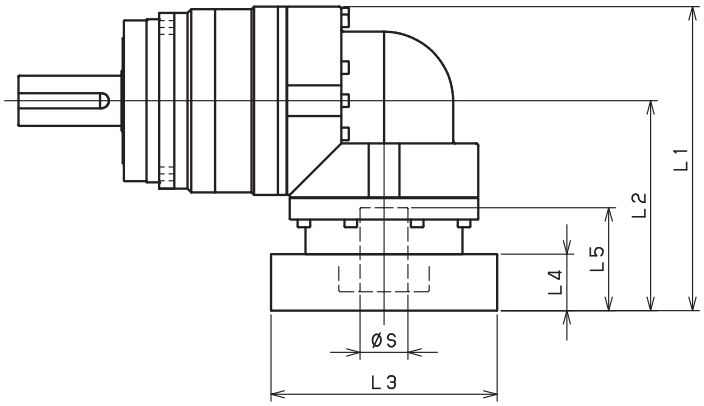

Model number	**: Adapter code	3-Stage				
		L1	L2	L3	L4	L5
EVS-140-□-□-19** (S≦ 19)	DA•DB•DC	185	110	□80	25	50
	EB•ED	185	110	□90	25	50
	FA	185	110	□100	25	50
	FB	195	120	□100	35	60
	GB•GD•GJ	185	110	□115	25	50
	HA	185	110	□130	25	50
	HB	200	125	□130	40	65
	JA	195	120	□150	35	60
EVS-140-□-□-28** (19≦ S≦ 28)	FA•FB•FC	211	136	□100	35	67
	GA•GB•GC•GD•GE•GF•GG•GH	211	136	□115	35	67
	HA•HC•HD	211	136	□130	35	67
	HB	221	146	□130	45	77
	HF	206	131	□130	30	62
	JA•JB•JC•JF	211	136	□150	35	67
	KA•KB•KE	211	136	□180	35	67
	LA	211	136	□200	35	67
	LB	221	146	□200	45	77
	MA	211	136	□220	35	67
	MB	221	146	□220	45	77
EVS-140-□-□-38** (28< S≦ 38)	HA	228	153	□130	45	82
	HB•HE	223	148	□130	40	77
	JA	228	153	□150	45	82
	KA•KB•KC	228	153	□180	45	82
	KD	263	188	□180	80	117
	KE	243	168	□180	60	97
	LB	238	163	□200	55	92
	MA•MB	228	153	□220	45	82
	MC	243	168	□220	60	97
	MD	238	163	□220	55	92
EVS-140-□-□-48** (38< S≦ 48)	KA	--	--	--	--	--
	KB•KC	--	--	--	--	--
	LA	--	--	--	--	--
	MA	--	--	--	--	--
	MB	--	--	--	--	--

*1) Triple reduction : 1/15~ 1/100 *2) Bushing will be inserted to adapt to motor shaft

For an explanation on the Adapter Flange Code, please turn to page 422.

A more comprehensive adapter flange offering can be found using the NIDEC-SHIMPO Online Selector Tool. The variety is constantly expanding and being updated on the Selector Tool. If you have any questions or need any support, contact NIDEC-SHIMPO.

EVS-180 – 2-Stage Specifications

Frame Size	**180**									
Stage	**2-Stage**									
Ratio	Units	Note	3	4	5	6	7	8	9	10
Nominal Output Torque	[Nm]	*1	400	575	600	600	600	600	400	400
Maximum Acceleration Torque	[Nm]	*2	575	770	960	1120	1120	1120	775	775
Emergency Stop Torque	[Nm]	*3	1300	1700	2000	2500	2500	2500	2000	2000
Nominal Input Speed	[rpm]	*4	1500							
Maximum Input Speed	[rpm]	*5	3000							
No Load Running Torque	[Nm]	*6	10.8							
Permitted Radial Load	[N]	*7	12000	13000	14000	15000	16000	17000	17000	18000
Permitted Axial Load	[N]	*8	16000	17000	17000	17000	17000	17000	17000	17000
Maximum Radial Load	[N]	*9	19000							
Maximum Axial Load	[N]	*10	17000							
Moment of Inertia (≤Ø 28)	[kgcm2]	--	--	--	--	--	--	--	--	--
Moment of Inertia (≤Ø 38)	[kgcm2]	--	92.00	76.72	71.23	68.28	66.08	65.00	64.38	64.10
Moment of Inertia (≤Ø 48)	[kgcm2]	--	126.9	111.6	106.1	103.1	100.9	99.86	99.25	98.97
Moment of Inertia (≤ Ø 65)	[kgcm2]	--	212.5	197.2	191.7	188.7	186.6	185.5	184.9	184.6
Efficiency	[%]	*11	93							
Torsional Rigidity	[Nm/arcmin]	*12	175							
Maximum Torsional Backlash	[Arc-min]	--	≤ 6							
Noise Level	[dB]	*13	≤ 85							
Protection Class	--	*14	IP54 (IP65)							
Ambient Temperature	[°C]	--	0-40							
Permitted Housing Temperature	[°C]	--	90							
Weight	[kg]	*15	52							

EVS-180 – 3-Stage Specifications

Frame Size	**180**									
Stage	**3-Stage**									
Ratio	Units	Note	15	16	20	25	28	30	35	40
Nominal Output Torque	[Nm]	*1	400	555	600	600	600	400	600	600
Maximum Acceleration Torque	[Nm]	*2	775	1120	1120	1120	1120	775	1120	1120
Emergency Stop Torque	[Nm]	*3	2000	2500	2500	2500	2500	2000	2500	2500
Nominal Input Speed	[rpm]	*4	1500							
Maximum Input Speed	[rpm]	*5	3000							
No Load Running Torque	[Nm]	*6	4.7							
Permitted Radial Load	[N]	*7	19000	19000	19000	19000	19000	19000	19000	19000
Permitted Axial Load	[N]	*8	17000	17000	17000	17000	17000	17000	17000	17000
Maximum Radial Load	[N]	*9	19000							
Maximum Axial Load	[N]	*10	17000							
Moment of Inertia (≤Ø 28)	[kgcm2]	--	11.42	12.03	11.11	10.96	11.57	10.31	10.82	10.23
Moment of Inertia (≤Ø 38)	[kgcm2]	--	20.21	20.82	19.90	19.74	20.36	19.10	19.60	19.02
Moment of Inertia (≤Ø 48)	[kgcm2]	--	25.03	25.64	24.72	24.56	25.18	23.92	24.42	23.84
Moment of Inertia (≤ Ø 65)	[kgcm2]	--	--	--	--	--	--	--	--	--
Efficiency	[%]	*11	88							
Torsional Rigidity	[Nm/arcmin]	*12	175							
Maximum Torsional Backlash	[Arc-min]	--	≤ 9							
Noise Level	[dB]	*13	≤ 85							
Protection Class	--	*14	IP54 (IP65)							
Ambient Temperature	[°C]	--	0-40							
Permitted Housing Temperature	[°C]	--	90							
Weight	[kg]	*15	39							

EVS-180 – 3-Stage Specifications

Frame Size	**180**								
Stage	**3-Stage**								
Ratio	Units	Note	45	50	60	70	80	90	100
Nominal Output Torque	[Nm]	*1	400	600	600	600	600	400	400
Maximum Acceleration Torque	[Nm]	*2	775	1120	1120	1120	1120	775	775
Emergency Stop Torque	[Nm]	*3	2000	2500	2500	2500	2500	2000	2000
Nominal Input Speed	[rpm]	*4	1500						
Maximum Input Speed	[rpm]	*5	3000						
No Load Running Torque	[Nm]	*6	4.7						
Permitted Radial Load	[N]	*7	19000	19000	19000	19000	19000	19000	19000
Permitted Axial Load	[N]	*8	17000	17000	17000	17000	17000	17000	17000
Maximum Radial Load	[N]	*9	19000						
Maximum Axial Load	[N]	*10	17000						
Moment of Inertia (≤Ø 28)	[kgcm2]	--	10.76	10.19	10.17	10.16	10.15	10.14	10.14
Moment of Inertia (≤Ø 38)	[kgcm2]	--	19.54	18.98	18.96	18.94	18.94	18.93	18.93
Moment of Inertia (≤Ø 48)	[kgcm2]	--	24.36	23.80	23.78	23.77	23.76	23.75	23.75
Moment of Inertia (≤ Ø 65)	[kgcm2]	--	--	--	--	--	--	--	--
Efficiency	[%]	*11	88						
Torsional Rigidity	[Nm/arcmin]	*12	175						
Maximum Torsional Backlash	[Arc-min]	--	≤ 9						
Noise Level	[dB]	*13	≤ 85						
Protection Class	--	*14	IP54 (IP65)						
Ambient Temperature	[°C]	--	0-40						
Permitted Housing Temperature	[°C]	--	90						
Weight	[kg]	*15	39						

*1) At nominal input speed, service life is 20,000 hours
*2) The maximum torque when starting or stopping operation
*3) The maximum torque allowed under a stress situation (Permitted 1,000 times during service life)
*4) The average input speed
*5) The maximum intermittent input speed
*6) This is the torque at no load applied on the input shaft. The input speed is 1500 rpm for EVS180
*7) At this load and nominal input speed, service life will be 20,000 hours. (The radial load applied to the output side bearing)
*8) At this load and nominal input speed, service life will be 20,000 hours. (The axial load applied to the output shaft center)
*9) The maximum radial load that the reducer can accept
*10) The maximum axial load that the reducer can accept
*11) The efficiency at the nominal torque rating
*12) This does not include the lost motion
*13) Contact NIDEC-SHIMPO for the testing conditions and environment
*14) IP65 (wash-down) is available as an option. Contact NIDEC-SHIMPO for more details and our food grade options
*15) The weight may vary slightly between models

EVS-180 – 2-Stage Dimensions

Input shaft bore ≦φ38

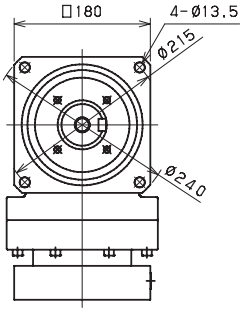

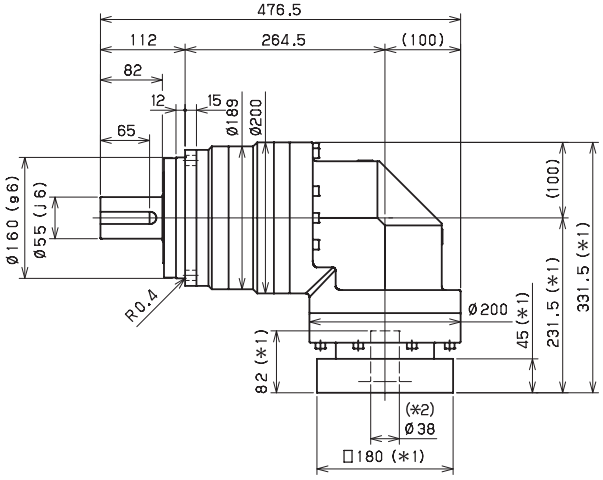

Input shaft bore ≦φ48

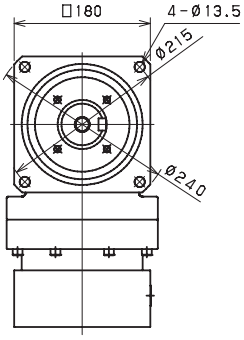

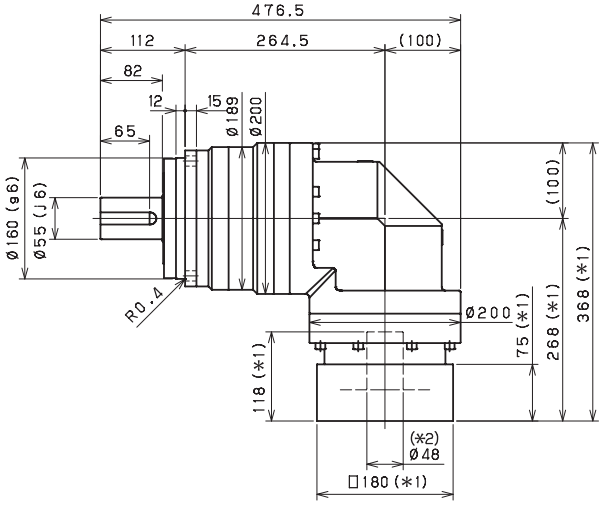

Input shaft bore ≦φ65

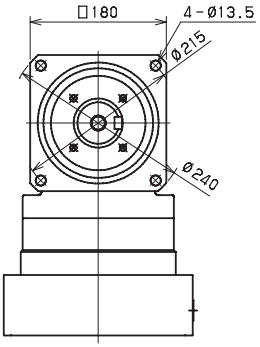

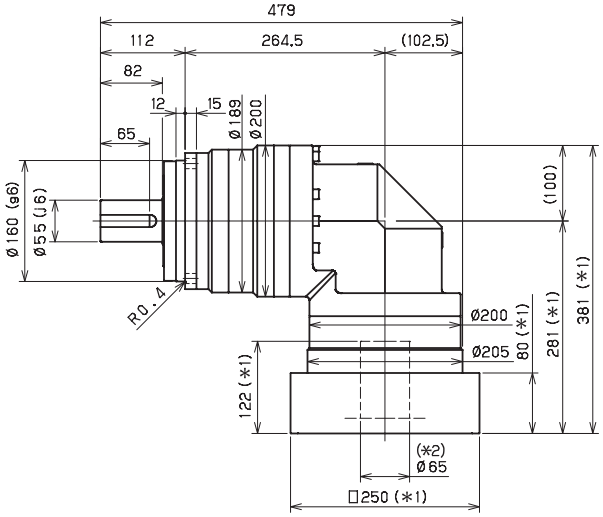

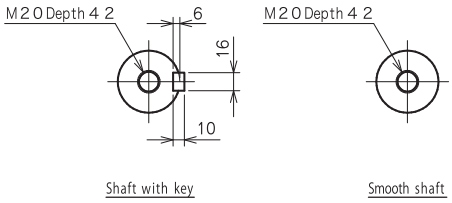

*1) Length will vary depending on motor

*2) Bushing will be inserted to adapt to motor shaft

EVS-180 – 3-Stage Dimensions

Input shaft bore ≦φ28

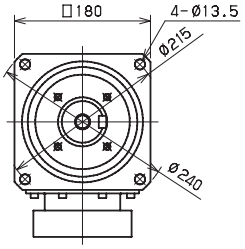

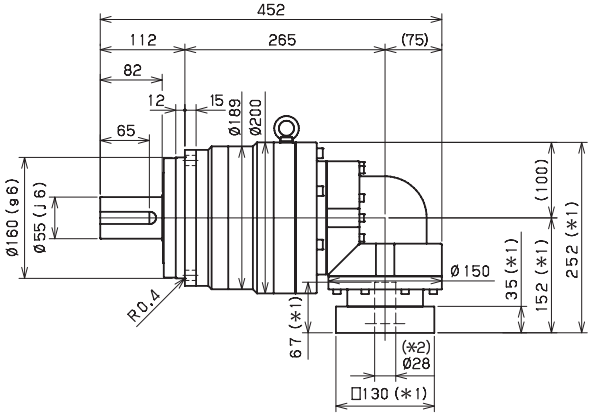

Input shaft bore ≦φ38

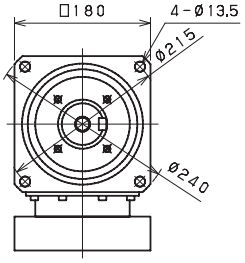

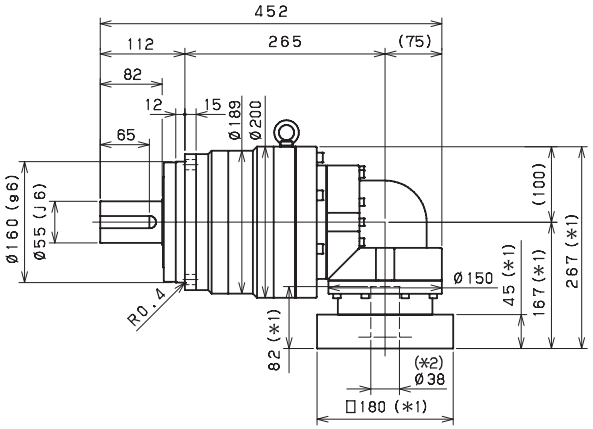

Input shaft bore ≦φ48

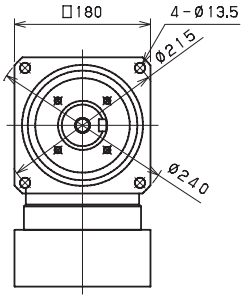

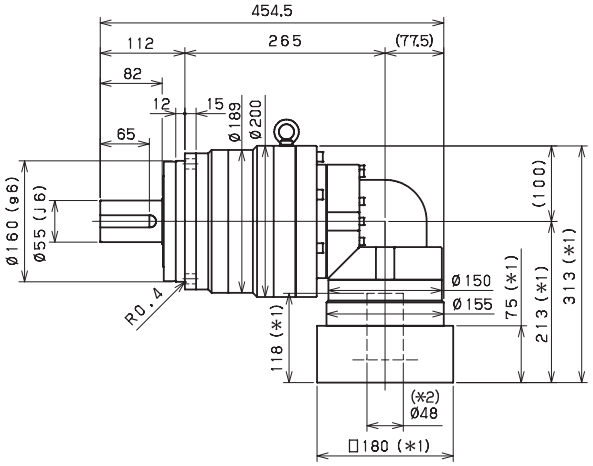

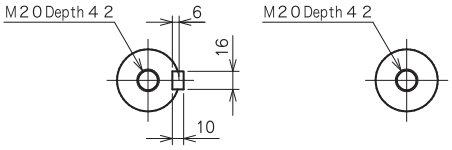

Shaft with key　　Smooth shaft

*1) Length will vary depending on motor

*2) Bushing will be inserted to adapt to motor shaft

EVS-180 – 2-Stage Adapter Dimensions

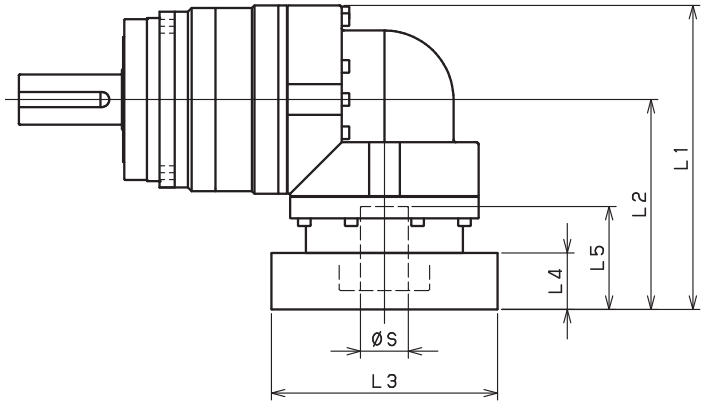

Model number	**: Adapter code	2-Stage				
		L1	L2	L3	L4	L5
EVS-180-□-□-28** (S≦ 28)	FA•FB•FC	--	--	--	--	--
	GA•GB•GC•GD•GE•GF•GG•GH	--	--	--	--	--
	HA•HC•HD	--	--	--	--	--
	HB	--	--	--	--	--
	HF	--	--	--	--	--
	JA•JB•JC•JF	--	--	--	--	--
	KA•KB•KE	--	--	--	--	--
	LA	--	--	--	--	--
	LB	--	--	--	--	--
	MA	--	--	--	--	--
	MB	--	--	--	--	--
EVS-180-□-□-38** (28< S≦ 38)	HA	331.5	231.5	□130	45	82
	HB•HE	326.5	226.5	□130	40	77
	JA	331.5	231.5	□150	45	82
	KA•KB•KC	331.5	231.5	□180	45	82
	KD	366.5	266.5	□180	80	117
	KE	346.5	246.5	□180	60	97
	LB	341.5	241.5	□200	55	92
	MA•MB	331.5	231.5	□220	45	82
	MC	346.5	246.5	□220	60	97
	MD	341.5	241.5	□220	55	92
	NA	331.5	231.5	□250	45	82
EVS-180-□-□-48** (38< S≦ 48)	KA	368	268	□180	75	118
	KB•KC	348	248	□180	55	98
	LA	348	248	□200	55	98
	MA	348	248	□220	55	98
	MB	368	268	□220	75	118
	NA	368	268	□250	75	118
	PA	368	268	□280	75	118
EVS-180-□-□-65** (48< S≦ 65)	MA•MB•MC•MD	381	281	□220	80	122
	NA•NC	381	281	□250	80	122
	NB•ND	411	311	□250	110	152
	PA	401	301	□280	100	142
	PB	411	311	□280	110	152

*1) Double reduction : 1/3~ 1/10 *2) Bushing will be inserted to adapt to motor shaft

For an explanation on the Adapter Flange Code, please turn to page 422.

A more comprehensive adapter flange offering can be found using the NIDEC-SHIMPO Online Selector Tool. The variety is constantly expanding and being updated on the Selector Tool. If you have any questions or need any support, contact NIDEC-SHIMPO.

EVS-180 – 3-Stage Adapter Dimensions

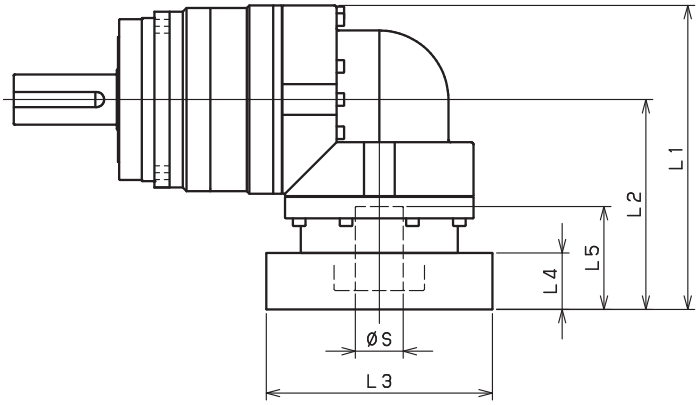

Model number	**: Adapter code	3-Stage				
		L1	L2	L3	L4	L5
EVS-180-□-□-28** (S≦ 28)	FA•FB•FC	252	152	□100	35	67
	GA•GB•GC•GD•GE•GF•GG•GH	252	152	□115	35	67
	HA•HC•HD	252	152	□130	35	67
	HB	262	162	□130	45	77
	HF	247	147	□130	30	62
	JA•JB•JC•JF	252	152	□150	35	67
	KA•KB•KE	252	152	□180	35	67
	LA	252	152	□200	35	67
	LB	262	162	□200	45	77
	MA	252	152	□220	35	67
	MB	262	162	□220	45	77
EVS-180-□-□-38** (28< S≦ 38)	HA	267	167	□130	45	82
	HB•HE	262	162	□130	40	77
	JA	267	167	□150	45	82
	KA•KB•KC	267	167	□180	45	82
	KD	302	202	□180	80	117
	KE	282	182	□180	60	97
	LB	277	177	□200	55	92
	MA•MB	267	167	□220	45	82
	MC	282	182	□220	60	97
	MD	277	177	□220	55	92
	NA	267	167	□250	45	82
EVS-180-□-□-48** (38< S≦ 48)	KA	313	213	□180	75	118
	KB•KC	293	193	□180	55	98
	LA	293	193	□200	55	98
	MA	293	193	□220	55	98
	MB	313	213	□220	75	118
	NA	313	213	□250	75	118
	PA	313	213	□280	75	118
EVS-180-□-□-65** (48< S≦ 65)	MA•MB•MC•MD	--	--	--	--	--
	NA•NC	--	--	--	--	--
	NB•ND	--	--	--	--	--
	PA	--	--	--	--	--
	PB	--	--	--	--	--

*1) Triple reduction : 1/15~ 1/100 *2) Bushing will be inserted to adapt to motor shaft

For an explanation on the Adapter Flange Code, please turn to page 422.

A more comprehensive adapter flange offering can be found using the NIDEC-SHIMPO Online Selector Tool. The variety is constantly expanding and being updated on the Selector Tool. If you have any questions or need any support, contact NIDEC-SHIMPO.

EVS-210 – 2-Stage Specifications

Frame Size	**210**									
Stage	**2-Stage**									
Ratio	Units	Note	3	4	5	6	7	8	9	10
Nominal Output Torque	[Nm]	*1	575	765	960	1150	1200	1200	800	800
Maximum Acceleration Torque	[Nm]	*2	1015	1355	1695	1840	1840	1760	1520	1280
Emergency Stop Torque	[Nm]	*3	2500	3300	4000	4500	4500	4500	3600	3600
Nominal Input Speed	[rpm]	*4	1000							
Maximum Input Speed	[rpm]	*5	2000							
No Load Running Torque	[Nm]	*6	14.5							
Permitted Radial Load	[N]	*7	17000	18000	20000	21000	22000	23000	24000	24000
Permitted Axial Load	[N]	*8	22000	22000	22000	22000	22000	22000	22000	22000
Maximum Radial Load	[N]	*9	24000							
Maximum Axial Load	[N]	*10	22000							
Moment of Inertia (≤Ø 38)	[kgcm2]	--	--	--	--	--	--	--	--	--
Moment of Inertia (≤Ø 48)	[kgcm2]	--	149.7	123.8	113.9	108.5	105.0	103.0	101.7	101.1
Moment of Inertia (≤ Ø 65)	[kgcm2]	--	224.9	199.0	189.1	183.7	180.3	178.2	176.9	176.3
Efficiency	[%]	*11	93							
Torsional Rigidity	[Nm/arcmin]	*12	400							
Maximum Torsional Backlash	[Arc-min]	--	≤ 6							
Noise Level	[dB]	*13	≤ 85							
Protection Class	--	*14	IP54 (IP65)							
Ambient Temperature	[°C]	--	0-40							
Permitted Housing Temperature	[°C]	--	90							
Weight	[kg]	*15	71							

EVS-210 – 3-Stage Specifications

Frame Size	**210**									
Stage	**3-Stage**									
Ratio	Units	Note	15	16	20	25	28	30	35	40
Nominal Output Torque	[Nm]	*1	800	1200	1200	1200	1200	800	1200	1200
Maximum Acceleration Torque	[Nm]	*2	1280	1840	1840	1840	1840	1280	1840	1840
Emergency Stop Torque	[Nm]	*3	3600	4500	4500	4500	4500	3600	4500	4500
Nominal Input Speed	[rpm]	*4	1000							
Maximum Input Speed	[rpm]	*5	2000							
No Load Running Torque	[Nm]	*6	10.2							
Permitted Radial Load	[N]	*7	24000	24000	24000	24000	24000	24000	24000	24000
Permitted Axial Load	[N]	*8	22000	22000	22000	22000	22000	22000	22000	22000
Maximum Radial Load	[N]	*9	24000							
Maximum Axial Load	[N]	*10	22000							
Moment of Inertia (≤Ø 38)	[kgcm2]	--	36.39	37.30	35.79	35.49	36.41	34.41	35.22	34.26
Moment of Inertia (≤Ø 48)	[kgcm2]	--	66.21	67.12	65.61	65.31	66.23	64.23	65.04	64.08
Moment of Inertia (≤ Ø 65)	[kgcm2]	--	--	--	--	--	--	--	--	--
Efficiency	[%]	*11	88							
Torsional Rigidity	[Nm/arcmin]	*12	400							
Maximum Torsional Backlash	[Arc-min]	--	≤ 9							
Noise Level	[dB]	*13	≤ 85							
Protection Class	--	*14	IP54 (IP65)							
Ambient Temperature	[°C]	--	0-40							
Permitted Housing Temperature	[°C]	--	90							
Weight	[kg]	*15	73							

EVS-210 – 3-Stage Specifications

Frame Size	**210**								
Stage	**3-Stage**								
Ratio	Units	Note	45	50	60	70	80	90	100
Nominal Output Torque	[Nm]	*1	800	1200	1200	1200	1200	800	800
Maximum Acceleration Torque	[Nm]	*2	1040	1840	1840	1840	1440	1040	960
Emergency Stop Torque	[Nm]	*3	3600	4500	4500	4500	4500	3600	3600
Nominal Input Speed	[rpm]	*4	1000						
Maximum Input Speed	[rpm]	*5	2000						
No Load Running Torque	[Nm]	*6	10.2						
Permitted Radial Load	[N]	*7	24000	24000	24000	24000	24000	24000	24000
Permitted Axial Load	[N]	*8	22000	22000	22000	22000	22000	22000	22000
Maximum Radial Load	[N]	*9	24000						
Maximum Axial Load	[N]	*10	22000						
Moment of Inertia (≤Ø 38)	[kgcm2]	--	35.11	34.18	34.14	34.12	34.10	34.09	34.08
Moment of Inertia (≤Ø 48)	[kgcm2]	--	64.92	64.00	63.96	63.93	63.92	63.90	63.90
Moment of Inertia (≤ Ø 65)	[kgcm2]	--	--	--	--	--	--	--	--
Efficiency	[%]	*11	88						
Torsional Rigidity	[Nm/arcmin]	*12	400						
Maximum Torsional Backlash	[Arc-min]	--	≤ 9						
Noise Level	[dB]	*13	≤ 85						
Protection Class	--	*14	IP54 (IP65)						
Ambient Temperature	[°C]	--	0-40						
Permitted Housing Temperature	[°C]	--	90						
Weight	[kg]	*15	73						

*1) At nominal input speed, service life is 20,000 hours
*2) The maximum torque when starting or stopping operation
*3) The maximum torque allowed under a stress situation (Permitted 1,000 times during service life)
*4) The average input speed
*5) The maximum intermittent input speed
*6) This is the torque at no load applied on the input shaft. The input speed is 1000 rpm for EVS210
*7) At this load and nominal input speed, service life will be 20,000 hours. (The radial load applied to the output side bearing)
*8) At this load and nominal input speed, service life will be 20,000 hours. (The axial load applied to the output shaft center)
*9) The maximum radial load that the reducer can accept
*10) The maximum axial load that the reducer can accept
*11) The efficiency at the nominal torque rating
*12) This does not include the lost motion
*13) Contact NIDEC-SHIMPO for the testing conditions and environment
*14) IP65 (wash-down) is available as an option. Contact NIDEC-SHIMPO for more details and our food grade options
*15) The weight may vary slightly between models

EVS-210 – 2-Stage Dimensions

Input shaft bore ≦φ48

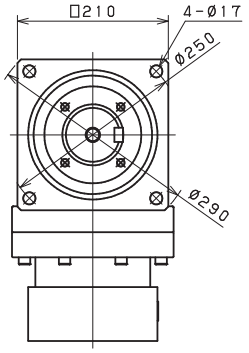

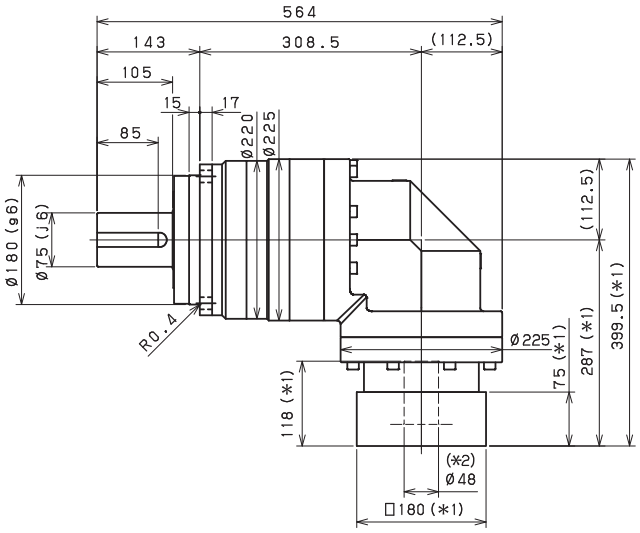

Input shaft bore ≦φ65

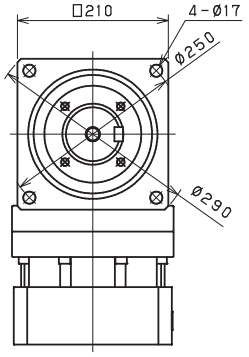

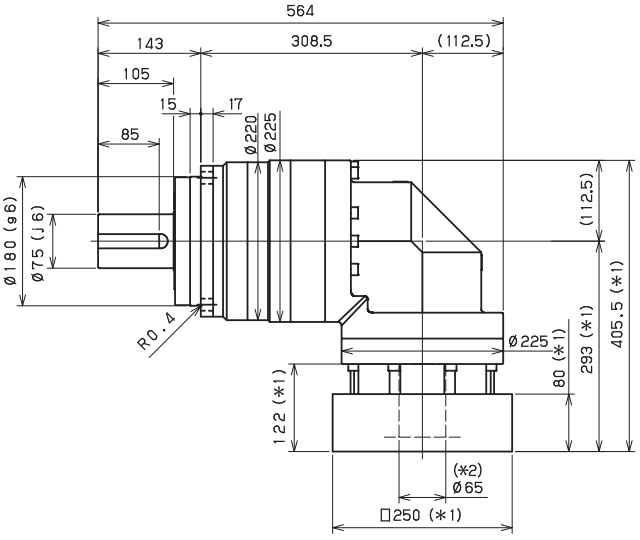

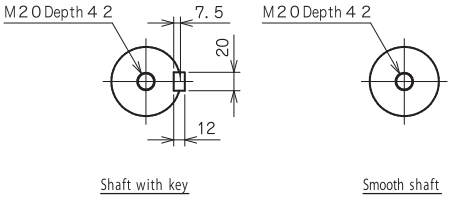

*1) Length will vary depending on motor

*2) Bushing will be inserted to adapt to motor shaft

EVS-210 – 3-Stage Dimensions

Input shaft bore ≦φ38

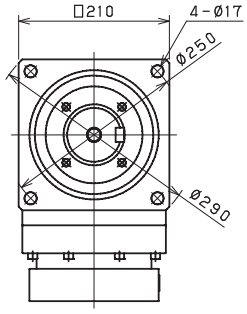

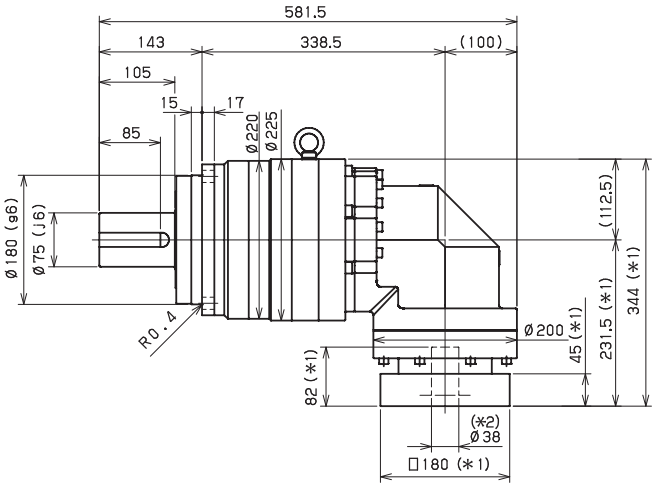

Input shaft bore ≦φ48

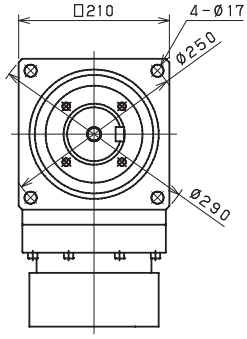

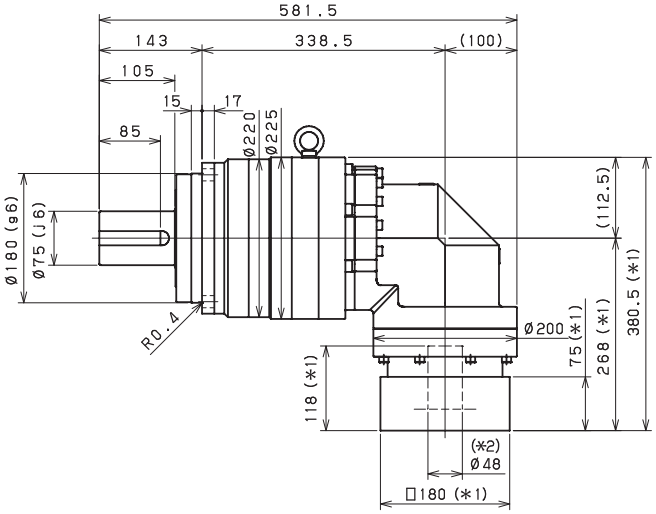

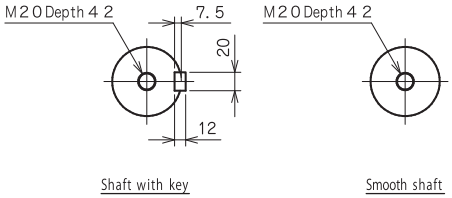

*1) Length will vary depending on motor

*2) Bushing will be inserted to adapt to motor shaft

EVS

EVS-210 – 2-Stage Adapter Dimensions

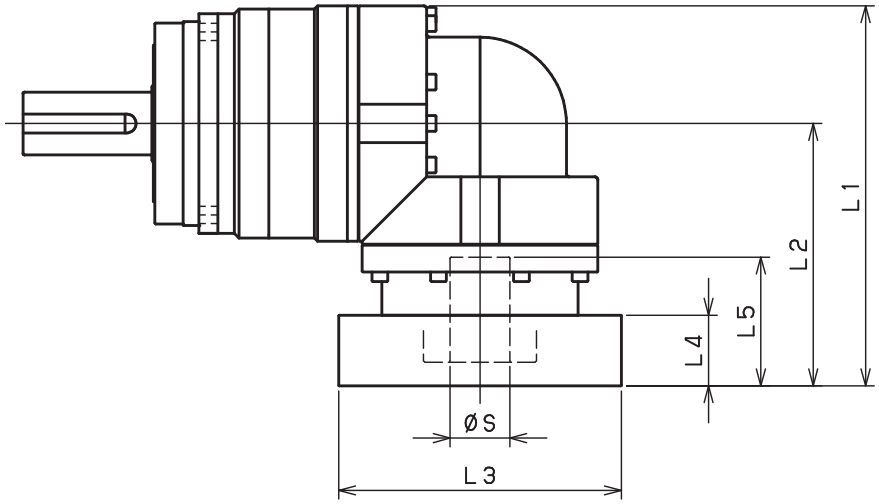

Model number	**: Adapter code	2-Stage				
		L1	L2	L3	L4	L5
EVS-210-□-□-38** (S≦ 38)	HA	--	--	--	--	--
	HB•HE	--	--	--	--	--
	JA	--	--	--	--	--
	KA•KB•KC	--	--	--	--	--
	KD	--	--	--	--	--
	KE	--	--	--	--	--
	LA	--	--	--	--	--
	LB	--	--	--	--	--
	MA•MB	--	--	--	--	--
	MC	--	--	--	--	--
	MD	--	--	--	--	--
	NA	--	--	--	--	--
EVS-210-□-□-48** (38< S≦48)	KA	399.5	287	□180	75	118
	KB•KC	379.5	267	□180	55	98
	LA	379.5	267	□200	55	98
	MA	379.5	267	□220	55	98
	MB	399.5	287	□220	75	118
	NA	399.5	287	□250	75	118
	PA	399.5	287	□280	75	118
EVS-210-□-□-65** (48< S≦ 65)	MA•MB•MC•MD	405.5	293	□220	80	122
	NA•NC	405.5	293	□250	80	122
	NB•ND	435.5	323	□250	110	152
	PA	425.5	313	□280	100	142
	PB	435.5	323	□280	110	152
	QA•QB	425.5	313	□320	100	142

*1) Double reduction : 1/3~ 1/10

*2) Bushing will be inserted to adapt to motor shaft

For an explanation on the Adapter Flange Code, please turn to page 422.

A more comprehensive adapter flange offering can be found using the NIDEC-SHIMPO Online Selector Tool. The variety is constantly expanding and being updated on the Selector Tool. If you have any questions or need any support, contact NIDEC-SHIMPO.

EVS-210 – 3-Stage Adapter Dimensions

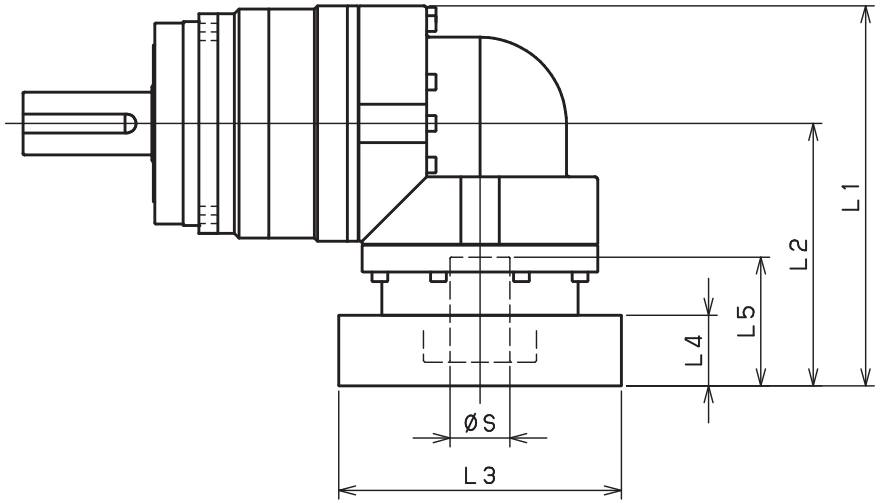

Model number	**: Adapter code	3-Stage				
		L1	L2	L3	L4	L5
EVS-210-□-□-38** (S≦ 38)	HA	344	231.5	□130	45	82
	HB•HE	339	226.5	□130	40	77
	JA	344	231.5	□150	45	82
	KA•KB•KC	344	231.5	□180	45	82
	KD	379	266.5	□180	80	117
	KE	359	246.5	□180	60	97
	LA	344	231.5	□200	45	82
	LB	354	241.5	□200	55	92
	MA•MB	344	231.5	□220	45	82
	MC	359	246.5	□220	60	97
	MD	354	241.5	□220	55	92
	NA	344	231.5	□250	45	82
EVS-210-□-□-48** (38< S≦48)	KA	380.5	268	□180	75	118
	KB•KC	360.5	248	□180	55	98
	LA	360.5	248	□200	55	98
	MA	360.5	248	□220	55	98
	MB	380.5	268	□220	75	118
	NA	380.5	268	□250	75	118
	PA	380.5	268	□280	75	118
EVS-210-□-□-65** (48< S≦ 65)	MA•MB•MC•MD	--	--	--	--	--
	NA•NC	--	--	--	--	--
	NB•ND	--	--	--	--	--
	PA	--	--	--	--	--
	PB	--	--	--	--	--
	QA•QB	--	--	--	--	--

*1) Triple reduction : 1/15~ 1/100

*2) Bushing will be inserted to adapt to motor shaft

For an explanation on the Adapter Flange Code, please turn to page 422.

A more comprehensive adapter flange offering can be found using the NIDEC-SHIMPO Online Selector Tool. The variety is constantly expanding and being updated on the Selector Tool. If you have any questions or need any support, contact NIDEC-SHIMPO.

EVS-240 – 2-Stage Specifications

Frame Size	**240**									
Stage	**2-Stage**									
Ratio	Units	Note	3	4	5	6	7	8	9	10
Nominal Output Torque	[Nm]	*1	1005	1340	1680	1920	1920	1920	1280	1280
Maximum Acceleration Torque	[Nm]	*2	2000	2960	2960	2960	2960	2880	2400	2080
Emergency Stop Torque	[Nm]	*3	4000	5400	6500	7200	7200	7200	5400	5400
Nominal Input Speed	[rpm]	*4	1000							
Maximum Input Speed	[rpm]	*5	2000							
No Load Running Torque	[Nm]	*6	25.3							
Permitted Radial Load	[N]	*7	21000	22000	24000	25000	26000	28000	29000	29000
Permitted Axial Load	[N]	*8	27000	27000	27000	27000	27000	27000	27000	27000
Maximum Radial Load	[N]	*9	30000							
Maximum Axial Load	[N]	*10	27000							
Moment of Inertia (≤Ø 48)	[kgcm2]	--	--	--	--	--	--	--	--	--
Moment of Inertia (≤ Ø 65)	[kgcm2]	--	217.5	156.7	134.5	122.4	112.9	108.3	105.5	104.0
Efficiency	[%]	*11	93							
Torsional Rigidity	[Nm/arcmin]	*12	550							
Maximum Torsional Backlash	[Arc-min]	--	≤ 6							
Noise Level	[dB]	*13	≤ 85							
Protection Class	--	*14	IP54 (IP65)							
Ambient Temperature	[°C]	--	0-40							
Permitted Housing Temperature	[°C]	--	90							
Weight	[kg]	*15	122							

EVS-240 – 3-Stage Specifications

Frame Size	**240**									
Stage			**3-Stage**							
Ratio	Units	Note	15	16	20	25	28	30	35	40
Nominal Output Torque	[Nm]	*1	1280	1920	1920	1920	1920	1280	1920	1920
Maximum Acceleration Torque	[Nm]	*2	2000	2960	2960	2960	2960	2000	2960	2960
Emergency Stop Torque	[Nm]	*3	5400	7200	7200	7200	7200	5400	7200	7200
Nominal Input Speed	[rpm]	*4	1000							
Maximum Input Speed	[rpm]	*5	2000							
No Load Running Torque	[Nm]	*6	16.4							
Permitted Radial Load	[N]	*7	30000	30000	30000	30000	30000	30000	30000	30000
Permitted Axial Load	[N]	*8	27000	27000	27000	27000	27000	27000	27000	27000
Maximum Radial Load	[N]	*9	30000							
Maximum Axial Load	[N]	*10	27000							
Moment of Inertia (≤Ø 48)	[kgcm2]	--	40.47	42.59	39.21	38.59	40.73	35.09	38.02	34.78
Moment of Inertia (≤ Ø 65)	[kgcm2]	--	--	--	--	--	--	--	--	--
Efficiency	[%]	*11	88							
Torsional Rigidity	[Nm/arcmin]	*12	550							
Maximum Torsional Backlash	[Arc-min]	--	≤ 9							
Noise Level	[dB]	*13	≤ 85							
Protection Class	--	*14	IP54 (IP65)							
Ambient Temperature	[°C]	--	0-40							
Permitted Housing Temperature	[°C]	--	90							
Weight	[kg]	*15	113							

EVS-240 – 3-Stage Specifications

Frame Size	**240**								
Stage	**3-Stage**								
Ratio	Units	Note	45	50	60	70	80	90	100
Nominal Output Torque	[Nm]	*1	1280	1920	1920	1920	1920	1280	1280
Maximum Acceleration Torque	[Nm]	*2	1680	2960	2960	2960	2160	1680	1440
Emergency Stop Torque	[Nm]	*3	5400	7200	7200	7200	7200	5400	5400
Nominal Input Speed	[rpm]	*4	1000						
Maximum Input Speed	[rpm]	*5	2000						
No Load Running Torque	[Nm]	*6	16.4						
Permitted Radial Load	[N]	*7	30000	30000	30000	30000	30000	30000	30000
Permitted Axial Load	[N]	*8	27000	27000	27000	27000	27000	27000	27000
Maximum Radial Load	[N]	*9	30000						
Maximum Axial Load	[N]	*10	27000						
Moment of Inertia (≤Ø 48)	[kgcm2]	--	37.78	34.62	34.53	34.48	34.45	34.42	34.41
Moment of Inertia (≤ Ø 65)	[kgcm2]	--	--	--	--	--	--	--	--
Efficiency	[%]	*11	88						
Torsional Rigidity	[Nm/arcmin]	*12	550						
Maximum Torsional Backlash	[Arc-min]	--	≤ 9						
Noise Level	[dB]	*13	≤ 85						
Protection Class	--	*14	IP54 (IP65)						
Ambient Temperature	[°C]	--	0-40						
Permitted Housing Temperature	[°C]	--	90						
Weight	[kg]	*15	113						

*1) At nominal input speed, service life is 20,000 hours
*2) The maximum torque when starting or stopping operation
*3) The maximum torque allowed under a stress situation (Permitted 1,000 times during service life)
*4) The average input speed
*5) The maximum intermittent input speed
*6) This is the torque at no load applied on the input shaft. The input speed is 1000 rpm for EVS210
*7) At this load and nominal input speed, service life will be 20,000 hours. (The radial load applied to the output side bearing)
*8) At this load and nominal input speed, service life will be 20,000 hours. (The axial load applied to the output shaft center)
*9) The maximum radial load that the reducer can accept
*10) The maximum axial load that the reducer can accept
*11) The efficiency at the nominal torque rating
*12) This does not include the lost motion
*13) Contact NIDEC-SHIMPO for the testing conditions and environment
*14) IP65 (wash-down) is available as an option. Contact NIDEC-SHIMPO for more details and our food grade options
*15) The weight may vary slightly between models

EVS-240 – 2-Stage Dimensions

Input shaft bore ≦φ65

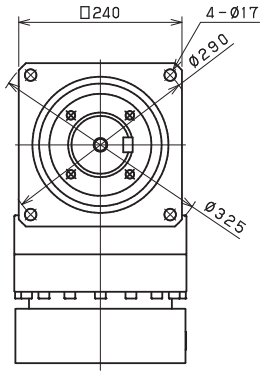

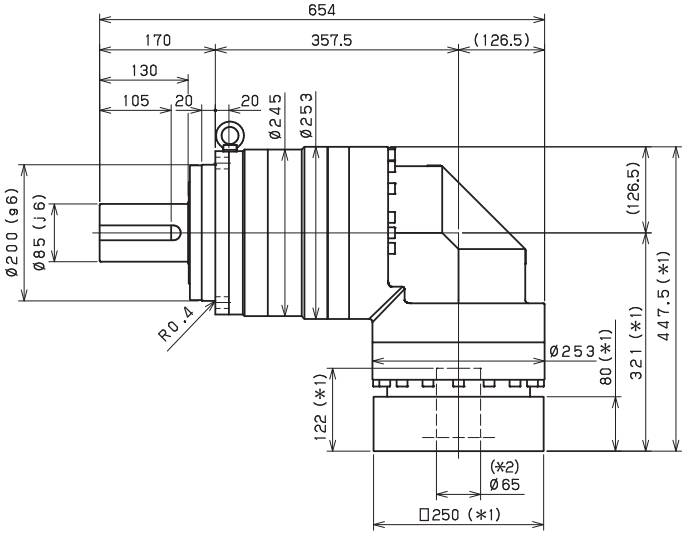

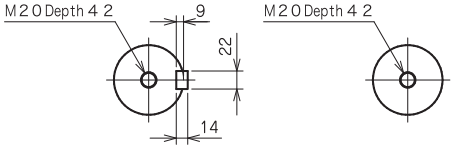

Shaft with key

Smooth shaft

*1) Length will vary depending on motor

*2) Bushing will be inserted to adapt to motor shaft

EVS-240 – 3-Stage Dimensions

Input shaft bore ≦φ48

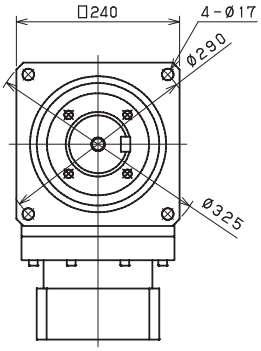

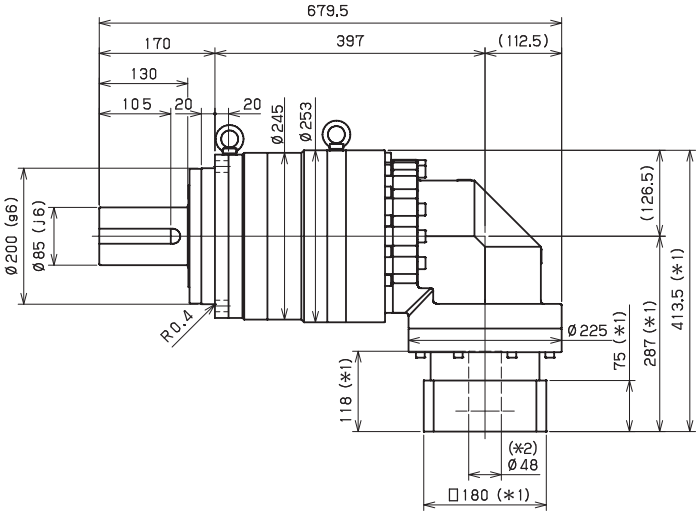

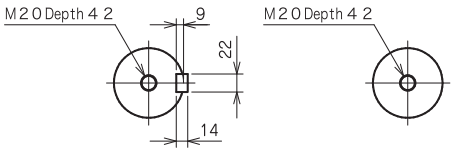

Shaft with key　　Smooth shaft

*1) Length will vary depending on motor

*2) Bushing will be inserted to adapt to motor shaft

EVS-240 – 2-Stage Adapter Dimensions

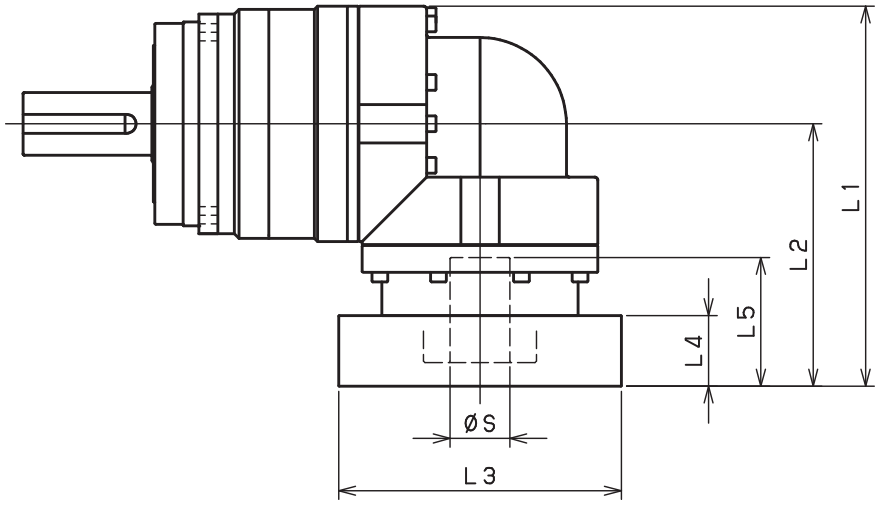

Model number	**: Adapter code	2-Stage				
		L1	L2	L3	L4	L5
EVS-240-□-□-48** (S≦ 48)	KA	--	--	--	--	--
	KB•KC	--	--	--	--	--
	LA	--	--	--	--	--
	MA	--	--	--	--	--
	MB	--	--	--	--	--
	NA	--	--	--	--	--
	PA	--	--	--	--	--
EVS-240-□-□-65** (48< S≦ 65)	MA•MB•MC•MD	447.5	321	□220	80	122
	NA•NC	447.5	321	□250	80	122
	NB•ND	477.5	351	□250	110	152
	PA	467.5	341	□280	100	142
	PB	477.5	351	□280	110	152
	QA•QB	467.5	341	□320	100	142

*1) Double reduction : 1/3~ 1/10

*2) Bushing will be inserted to adapt to motor shaft

For an explanation on the Adapter Flange Code, please turn to page 422.

A more comprehensive adapter flange offering can be found using the NIDEC-SHIMPO Online Selector Tool. The variety is constantly expanding and being updated on the Selector Tool. If you have any questions or need any support, contact NIDEC-SHIMPO.

EVS-240 – 3-Stage Adapter Dimensions

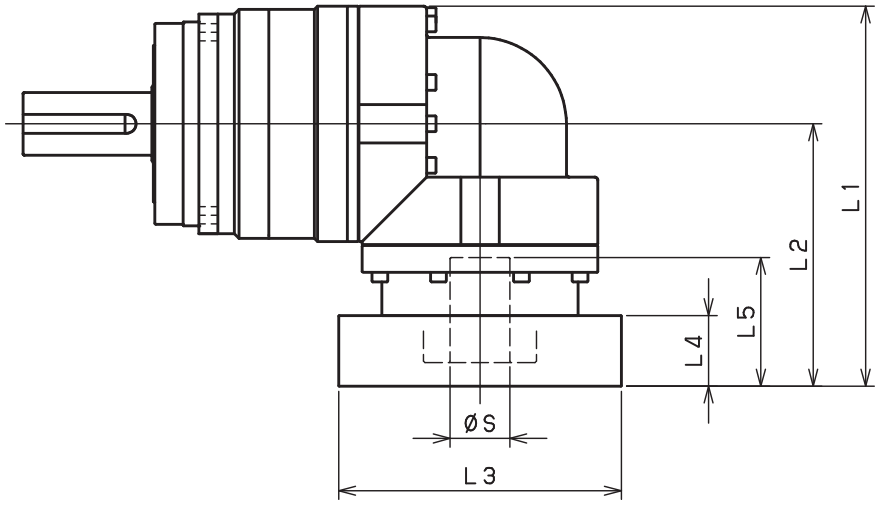

Model number	**: Adapter code	3-Stage				
		L1	L2	L3	L4	L5
EVS-240-□-□-48** (S≦ 48)	KA	413.5	287	□180	75	118
	KB•KC	393.5	267	□180	55	98
	LA	393.5	267	□200	55	98
	MA	393.5	267	□220	55	98
	MB	413.5	287	□220	75	118
	NA	413.5	287	□250	75	118
	PA	413.5	287	□280	75	118
EVS-240-□-□-65** (48< S≦ 65)	MA•MB•MC•MD	--	--	--	--	--
	NA•NC	--	--	--	--	--
	NB•ND	--	--	--	--	--
	PA	--	--	--	--	--
	PB	--	--	--	--	--
	QA•QB	--	--	--	--	--

*1) Triple reduction : 1/15~ 1/100

*2) Bushing will be inserted to adapt to motor shaft

For an explanation on the Adapter Flange Code, please turn to page 422.

A more comprehensive adapter flange offering can be found using the NIDEC-SHIMPO Online Selector Tool. The variety is constantly expanding and being updated on the Selector Tool. If you have any questions or need any support, contact NIDEC-SHIMPO.

STH-SERIES

The STH is a mid-range speed and torque gear reducer that sets a new standard for rotary positioning performance at an exceptional price point. A SHIMPO ABLE planetary gearbox is the interface between the servo motor and STH rotary stage. The ABLE reducer features simple mounting of nearly any small to medium servo motor, and it gives the complete STH package net ratios ranging from 12:1 through 400:1.

The rotary stage has very large crossed roller output bearings, allowing for impressive thrust loads and tilting moments. A generous hollow bore provides clearance for wiring, tubing, or threaded rod to be passed through to effectors, fillers, or any other active machinery. The STH fills the need for a high-performance, price competitive option to your traditional style indexers and cam units.

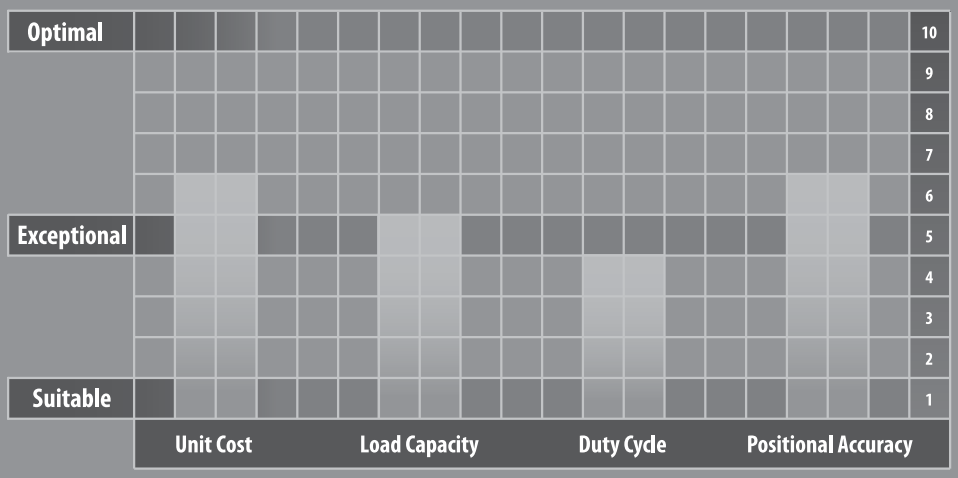

STH

STH-SERIES

- 85 mm pass-through hole allows use of air lines or wiring
- Input is compatible with most servo motor brands
- Exceptional value for small to mid-range indexing applications
- Available ratios range from 12:1 through 400:1
- Ships within 48 hours
- Assembled in the USA

STH-Series – Features

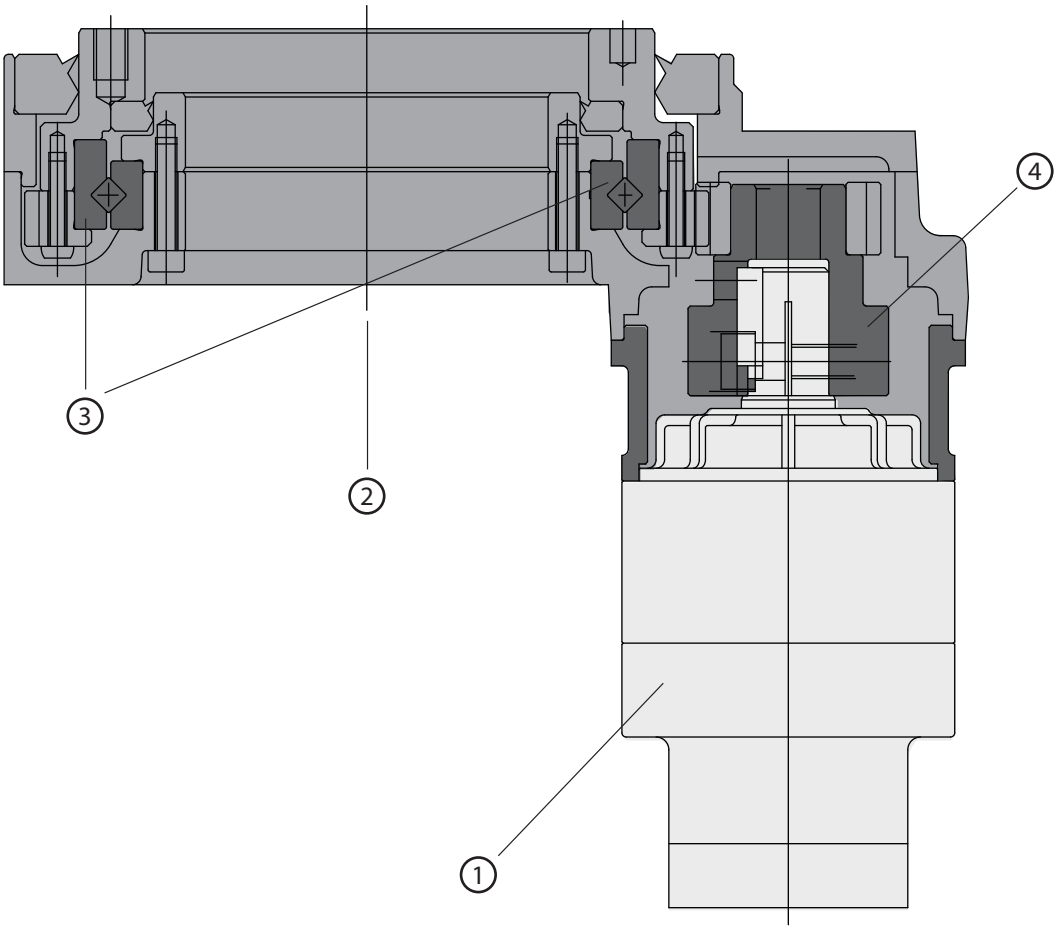

1. One or two stage planetary reducer
2. 85 mm hollow bore diameter
3. Heavy duty cross-roller bearing
4. Final stage primary gear

STHVL7 and STHEL7 Series – Model Code

STH	V	L	7	U	1	0	0	9	1	9	H	A	1	9	0	0
Model	Input			Input Unit Direction	Ratio			Backlash	Reducer Input Bore		Motor Attachment		Motor Shaft OD		Modifications	

Model
Order Code

STH	Hollow output

Input
Order Code

VL7	VRL-070
EL7	EVL-070

Input Unit Direction
Order Code

0	VRL input
U	R/A - Up
D	R/A - Down
R	R/A - Right
L	R/A - Left

Backlash
Order Code

2	2 Arc-min
8	8 Arc-min

Ratio
Order Code

012	Double Reduction w/ VRL Triple Reduction w/ EVL	12:1
016		16:1
020		20:1
028		28:1
040		40:1
060	Triple Reduction w/ VRL Quadruple Reduction w/ EVL	60:1
080		80:1
100		100:1
120		120:1
140		140:1
160		160:1
200		200:1
280		280:1
400		400:1

Reducer Input Bore
Order Code

08	8 mm
14	14 mm
19	19 mm

Motor Shaft OD
Order Code

05	5 mm
06	6 mm
N1	6.35 mm
07	7 mm
08	8 mm
09	9 mm
N2	9.525 mm
10	10 mm
11	11 mm
12	12 mm
N3	12.7 mm
14	14 mm
N4	15.875 mm
16	16 mm
17	17 mm
19	19 mm

Modifications/Motor Attachment Tapped Holes
Order Code

00	Standard
I	IP65 - standard grease
F	N/A
G	N/A
S	Steel-It paint - standard grease - IP65
W	White epoxy paint - standard grease - IP65
X	N/A
F	N/A
T	Re-tap adapter flange one size larger
H	Through hole on motor attachment flange
L	Larger through hole on adapter flange
B	Pilot diameter reduced
R	Deeper adapter flange/add spacer plate
A_	Specify

Notes:
Use 0's (zeros) for unused modification.

Input Unit Direction (Right-angle Detail)

"U": Right-angle Input Up Direction

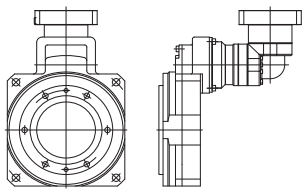

"D": Right-angle Input Down Direction

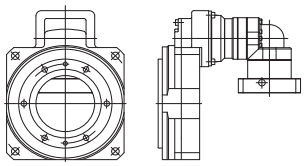

"R": Right-angle Input Right Direction

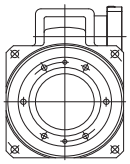

"L": Right-angle Input Left Direction

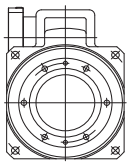

STHVL7 2-Stage & 3-Stage Specifications

Frame Size	**STHVL7**								
Stage	Units	Notes	**2-Stage**					**3-Stage**	
Ratio	--	*1	12:1	16:1	20:1	28:1	40:1	60:1	80:1
Nominal Torque 1	[Nm]	*2	65	85	85	85	68	68	85
Acceleration Torque	[Nm]	--	126	170	170	170	133	133	170
Emergency Stop Torque	[Nm]	--	240	240	240	240	240	240	240
Nominal Input Speed	[rpm]	--	3000					3000	
Max. Input Speed	[rpm]	--	6000					6000	
Moment of Inertia (≤Ø 8)	[kgcm2]	*3	1.109	0.640	0.426	0.240	0.143	0.094	0.076
Moment of Inertia (≤Ø 14)	[kgcm2]	*3	1.189	0.715	0.509	0.318	0.227	0.179	0.152
Moment of Inertia (≤Ø 19)	[kgcm2]	*3	1.399	0.925	0.709	0.528	0.427	0.389	0.372
Backlash	[arc-min]	--	2					2	
Accuracy	[arc-sec]	--	±60					±60	
Torsional Stiffness	[Nm/arc-min]	--	7.6					7.6	
Weight	[kg]	--	7.6					7.8	
Max. Axial Load	[N]	--	4000					4000	
Max. Radial Load	[N]	--	5000					5000	
Max. Tilting Moment Load	[Nm]	--	200					200	
Max. Surface Runout	[mm]	--	0.070					0.070	
Max. Deflection	[mm]	--	0.70					0.70	
Efficiency	[%]	--	86	86	90	90	90	86	86
Noise Level	[dB]	--	72	72	65	65	65	65	65
Max. Ambient Temperature	°C	--	0-40					0-40	
Max. Surface Temperature	°C	--	90					90	
Lubrication	--	--	Grease					Grease	
Protection	--	*4	IP54 (IP65)					IP54 (IP65)	
Unit Life	hr	--	20000					20000	

*1) Contact NIDEC-SHIMPO for more optional ratios

*2) At nominal input speed

*3) At input shaft

*4) IP65 (wash-down) is available as an option. Contact NIDEC-SHIMPO for more details and our food grade options

STHVL7 2-Stage & 3-Stage Dimensions

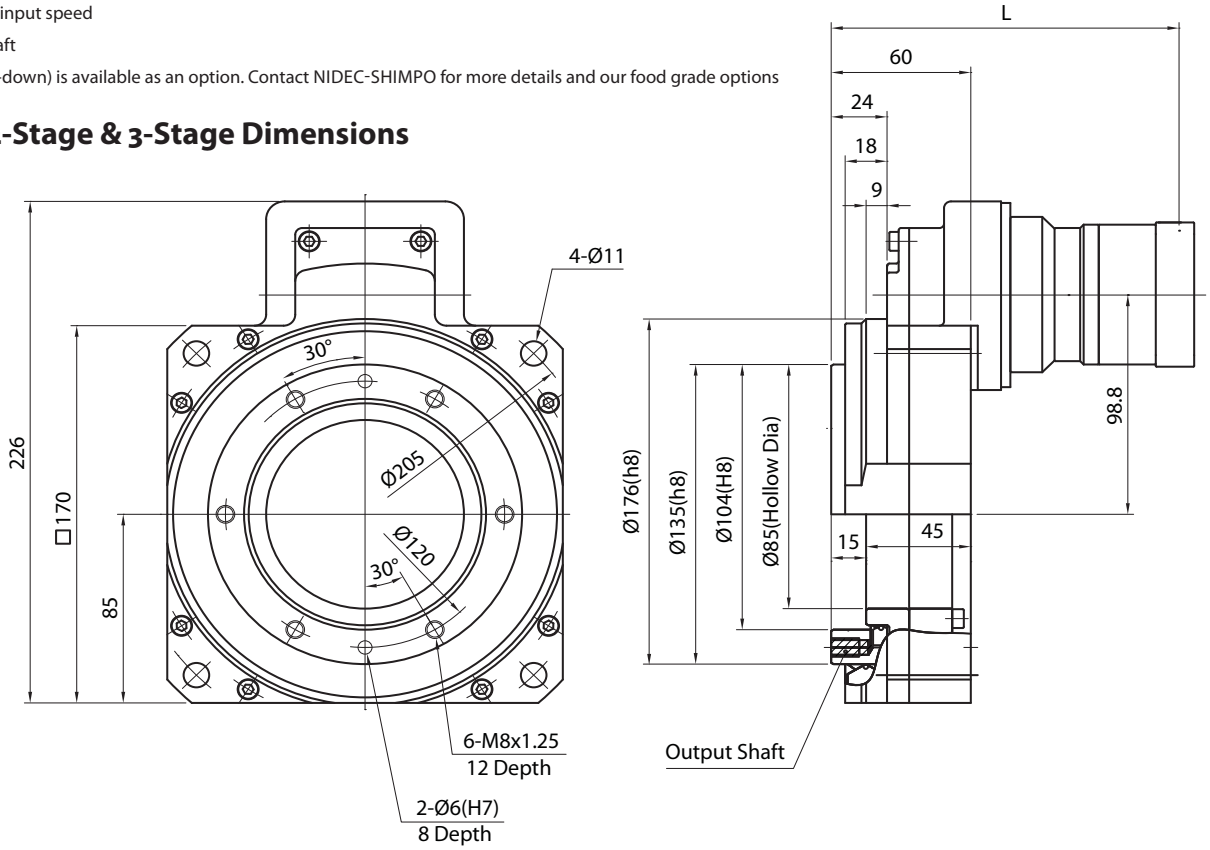

STHVL7 3-Stage Specifications

Frame Size	STHVL7								
Stage	Units	Notes	**3-Stage**						
Ratio	--	*1	100:1	120:1	140:1	160:1	200:1	280:1	400:1
Nominal Torque 1	[Nm]	*2	85	68	85	85	85	85	68
Acceleration Torque	[Nm]	--	170	133	170	170	170	170	133
Emergency Stop Torque	[Nm]	--	240	240	240	240	240	240	240
Nominal Input Speed	[rpm]	--	3000						
Max. Input Speed	[rpm]	--	6000						
Moment of Inertia (≤Ø 8)	[kgcm2]	*3	0.067	0.059	0.060	0.054	0.052	0.051	0.050
Moment of Inertia (≤Ø 14)	[kgcm2]	*3	0.144	0.140	0.137	0.135	0.133	0.132	0.131
Moment of Inertia (≤Ø 19)	[kgcm2]	*3	0.364	0.350	0.357	0.345	0.343	0.342	0.341
Backlash	[arc-min]	--	2						
Accuracy	[arc-sec]	--	±60						
Torsional Stiffness	[Nm/arc-min]	--	7.6						
Weight	[kg]	--	7.8						
Max. Axial Load	[N]	--	4000						
Max. Radial Load	[N]	--	5000						
Max. Tilting Moment Load	[Nm]	--	200						
Max. Surface Runout	[mm]	--	0.070						
Max. Deflection	[mm]	--	0.70						
Efficiency	[%]	--	86	86	86	86	86	86	86
Noise Level	[dB]	--	65	65	65	65	65	65	65
Max. Ambient Temperature	°C	--	0-40						
Max. Surface Temperature	°C	--	90						
Lubrication	--	--	Grease						
Protection	--	*4	IP54 (IP65)						
Unit Life	hr	--	20000						

*1) Contact NIDEC-SHIMPO for more optional ratios

*2) At nominal input speed

*3) At input shaft

*4) IP65 (wash-down) is available as an option. Contact NIDEC-SHIMPO for more details and our food grade options

STHVL7 3-Stage Dimensions

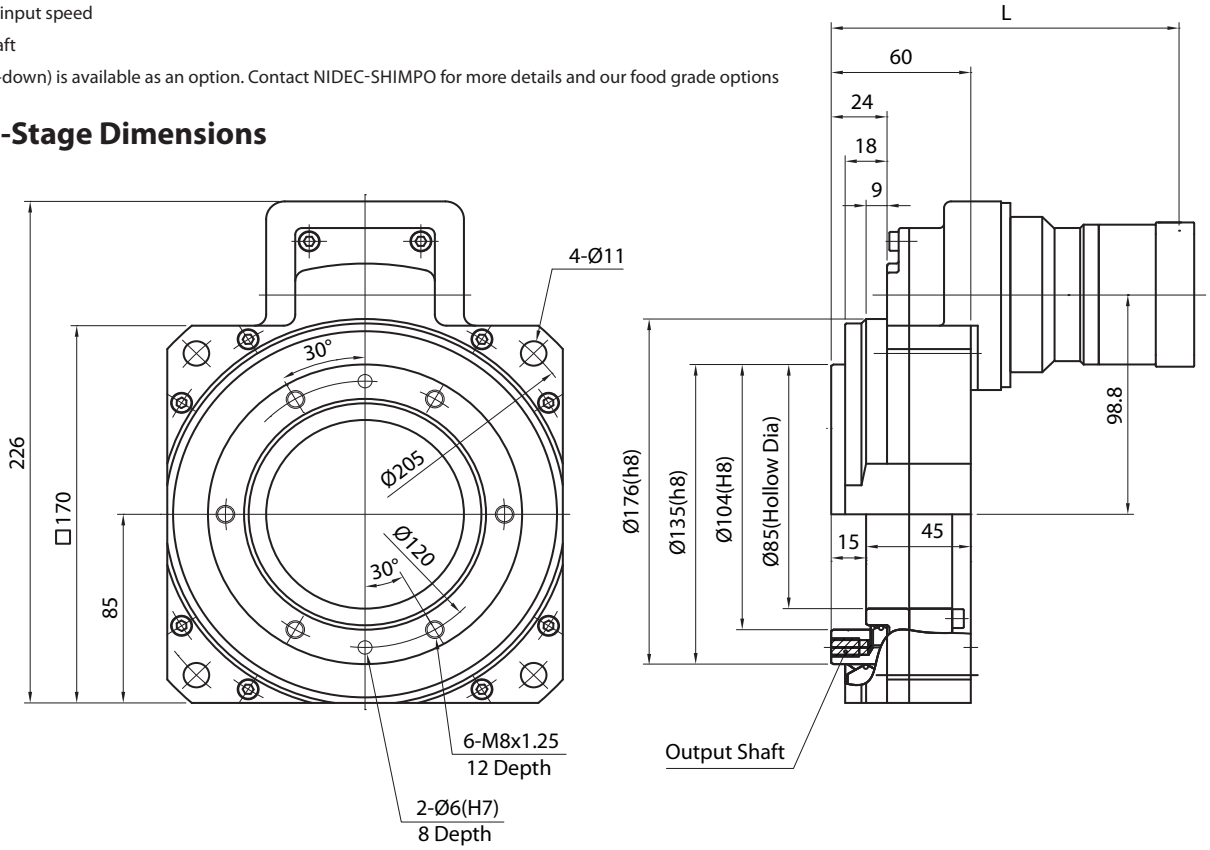

STHEL7 2-Stage & 3-Stage Specifications

Frame Size	**STHEL7**								
Stage	Units	Notes	**2-Stage**					**3-Stage**	
Ratio	--	*1	12:1	16:1	20:1	28:1	40:1	60:1	80:1
Nominal Torque 1	[Nm]	*2	43	58	84	85	61	61	85
Acceleration Torque	[Nm]	--	86	115	152	170	122	122	170
Emergency Stop Torque	[Nm]	--	180	234	240	240	204	240	240
Nominal Input Speed	[rpm]	--	3000					3000	
Max. Input Speed	[rpm]	--	6000					6000	
Moment of Inertia (≤Ø 8)	[kgcm2]	*3	1.280	0.811	0.597	0.412	0.314	0.112	0.093
Moment of Inertia (≤Ø 14)	[kgcm2]	*3	1.355	0.886	0.672	0.487	0.389	0.157	0.138
Moment of Inertia (≤Ø 19)	[kgcm2]	*3	1.544	1.075	0.862	0.676	0.578	--	--
Backlash	[arc-min]	--	8					8	
Accuracy	[arc-sec]	--	±60					±60	
Torsional Stiffness	[Nm/arc-min]	--	7.6					7.6	
Weight	[kg]	--	8.0					7.8	
Max. Axial Load	[N]	--	4000					4000	
Max. Radial Load	[N]	--	5000					5000	
Max. Tilting Moment Load	[Nm]	--	200					200	
Max. Surface Runout	[mm]	--	0.070					0.070	
Max. Deflection	[mm]	--	0.70					0.70	
Efficiency	[%]	--	84	84	88	88	88	84	84
Noise Level	[dB]	--	72	72	65	65	65	65	65
Max. Ambient Temperature	°C	--	0-40					0-40	
Max. Surface Temperature	°C	--	90					90	
Lubrication	--	--	Grease					Grease	
Protection	--	*4	IP54 (IP65)					IP54 (IP65)	
Unit Life	hr	--	20000					20000	

*1) Contact NIDEC-SHIMPO for more optional ratios

*2) At nominal input speed

*3) At input shaft

*4) IP65 (wash-down) is available as an option. Contact NIDEC-SHIMPO for more details and our food grade options

STHEL7 2-Stage & 3-Stage Dimensions

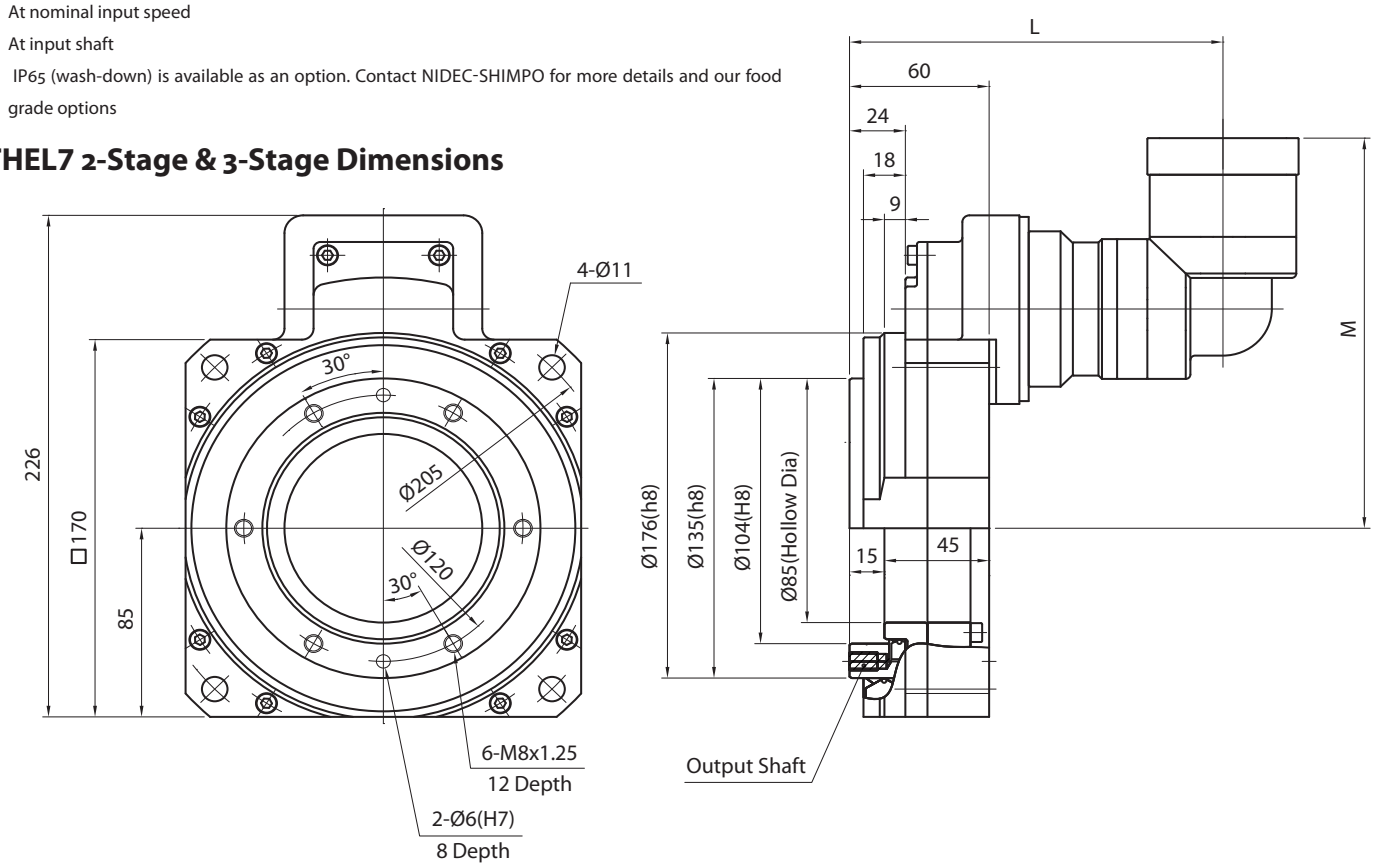

STHEL7 3-Stage Specifications

Frame Size	STHEL7								
Stage	Units	Notes	**3-Stage**						
Ratio	--	*1	100:1	120:1	140:1	160:1	200:1	280:1	400:1
Nominal Torque 1	[Nm]	*2	85	61	85	85	85	85	61
Acceleration Torque	[Nm]	--	170	122	170	170	170	170	122
Emergency Stop Torque	[Nm]	--	240	240	240	240	240	240	240
Nominal Input Speed	[rpm]	--	3000						
Max. Input Speed	[rpm]	--	6000						
Moment of Inertia (≤Ø 8)	[kgcm2]	*3	0.085	0.072	0.077	0.066	0.064	0.063	0.062
Moment of Inertia (≤Ø 14)	[kgcm2]	*3	0.129	0.116	0.122	0.111	0.108	0.106	0.106
Moment of Inertia (≤Ø 19)	[kgcm2]	*3	--	--	--	--	--	--	--
Backlash	[arc-min]	--	8						
Accuracy	[arc-sec]	--	±60						
Torsional Stiffness	[Nm/arc-min]	--	7.6						
Weight	[kg]	--	7.8						
Max. Axial Load	[N]	--	4000						
Max. Radial Load	[N]	--	5000						
Max. Tilting Moment Load	[Nm]	--	200						
Max. Surface Runout	[mm]	--	0.070						
Max. Deflection	[mm]	--	0.70						
Efficiency	[%]	--	84	84	84	84	84	84	84
Noise Level	[dB]	--	65	65	65	65	65	65	65
Max. Ambient Temperature	°C	--	0-40						
Max. Surface Temperature	°C	--	90						
Lubrication	--	--	Grease						
Protection	--	*4	IP54 (IP65)						
Unit Life	hr	--	20000						

*1) Contact NIDEC-SHIMPO for more optional ratios

*2) At nominal input speed

*3) At input shaft

*4) IP65 (wash-down) is available as an option. Contact NIDEC-SHIMPO for more details and our food grade options

STHEL7 3-Stage Dimensions

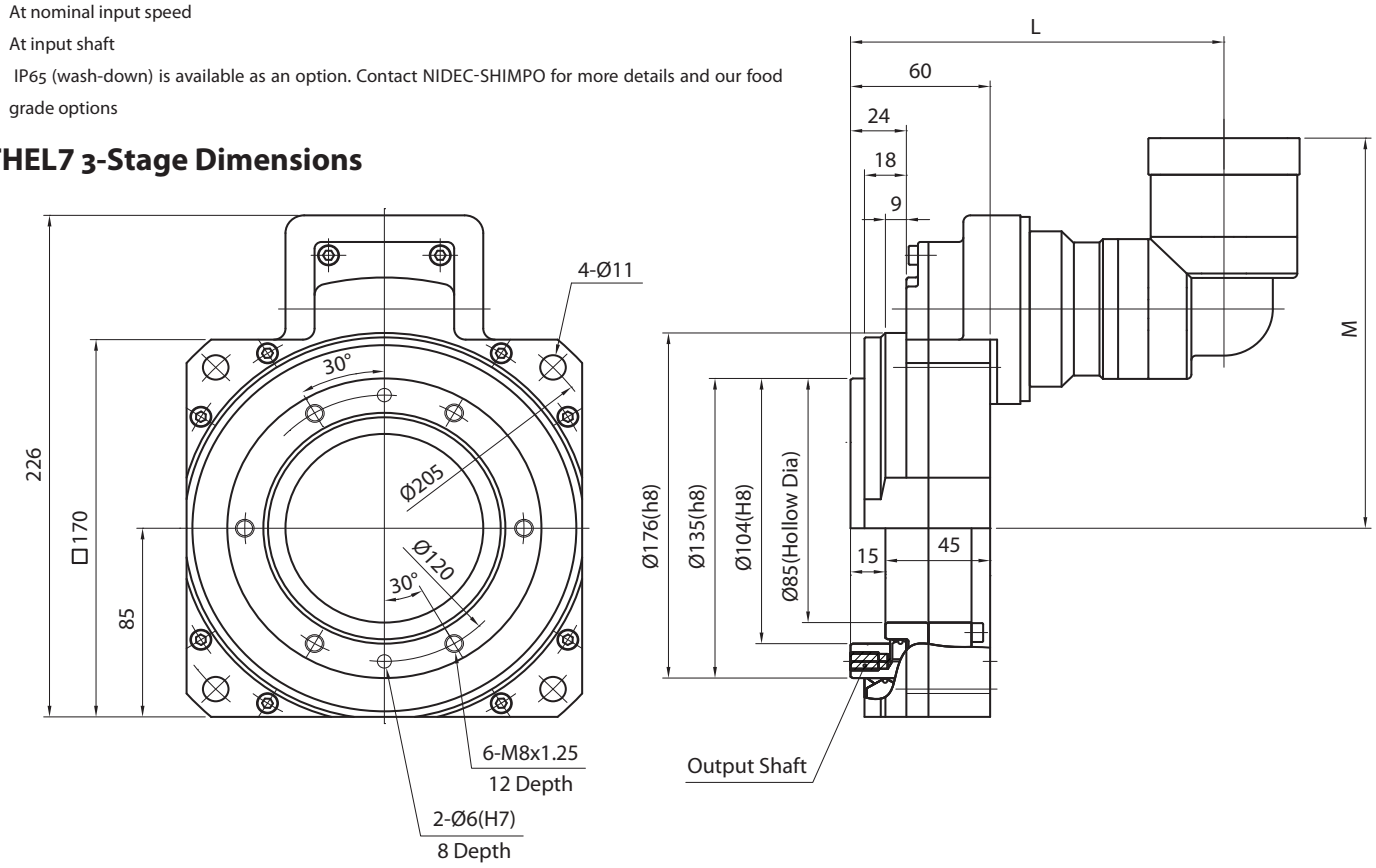

STR-SERIES

The STR provides a solution for ultra-high precision, obtaining accuracies up to 20 arc-seconds. The STR allows an application to reach negligible backlash, maintain exceptional rigidity, and maximize control stability so that the desired output motion can be easily achieved. The design is truly a unique concept, utilizing a full contact screw-like transmission for high-efficiency and elimination of wear. The unit provides maximum compactness using orthogonal axes and includes a large hollow shaft for flexibility.

The STR will most often incorporate either an inline (VRB) or right-angle (EVB) reducer to achieve an additional reduction and simplify the connection to your servo motor. It is available in a number of housing sizes, and it can handle extremely large moment loads. The STR is an ideal fit for any automation or custom material handling integrator that requires the precision, rigidity, and repeatability that this servo rotary indexer can offer.

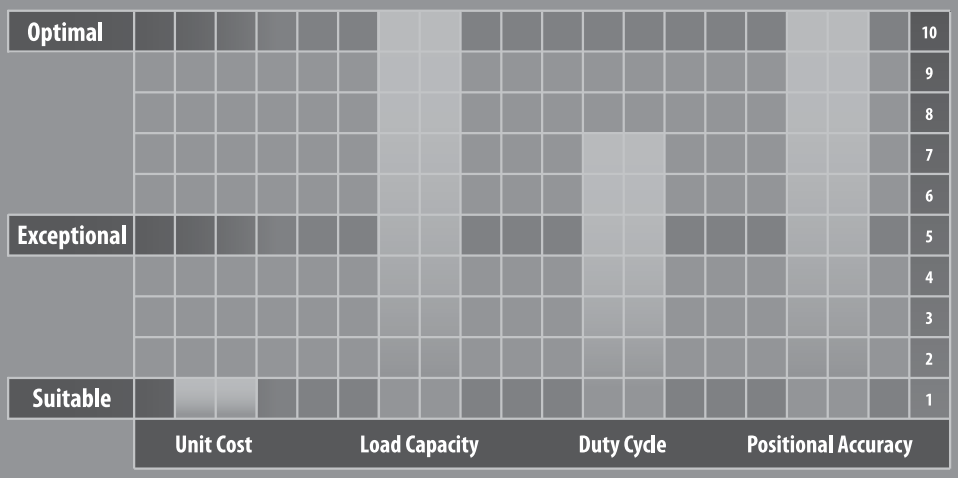

STR-SERIES

- Compatible with nearly any servo motor
- High output torque, high rigidity, high moment loads
- Large variety of reduction ratios to choose from
- Zero backlash, with precision as tight as 20 arc-secs
- Large hollow shaft design allows use of air lines or wiring
- Multiple ratios to match application requirements

STR-Series – Features

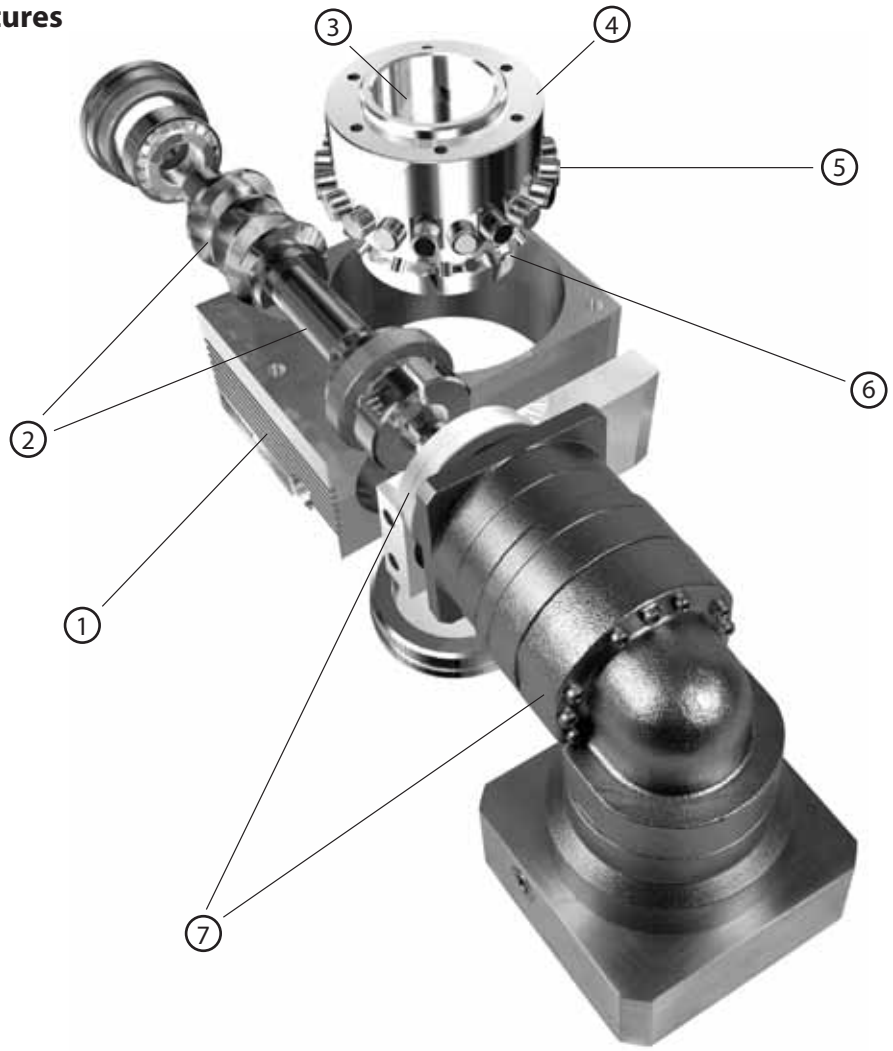

1. Housing constructed from aluminum alloy
2. Special worm input shaft providing screw like transmission
3. Hollow-bore output shaft
4. Output shaft
5. Cam roller followers
6. Cross-roller bearing
7. Direct connection to VRB or EVB planetary reducer

STR-Series – Model Code

STR	1 0 0	0 8 0	E	R	1 4 B K 1 2	0 0

- Modifications
- * Adapter flange code
- Gearbox mount side (Right [R], Left [L])
- Input Reducer type (Inline [V], Right-angle [E], None [N])
- Reduction ratio (Variety ranging from 15:1 - 2000:1)
- Actuator size (040, 063, 080, 100, 125, 160, 250)
- Model name STR product

*1) Adapter flange code
Adapter flange code varies depending on the motor.

Contact us for additional information or refer to our online reducer selection tool.

Selection tool www.nidec-shimpo.co.jp/selection/eng

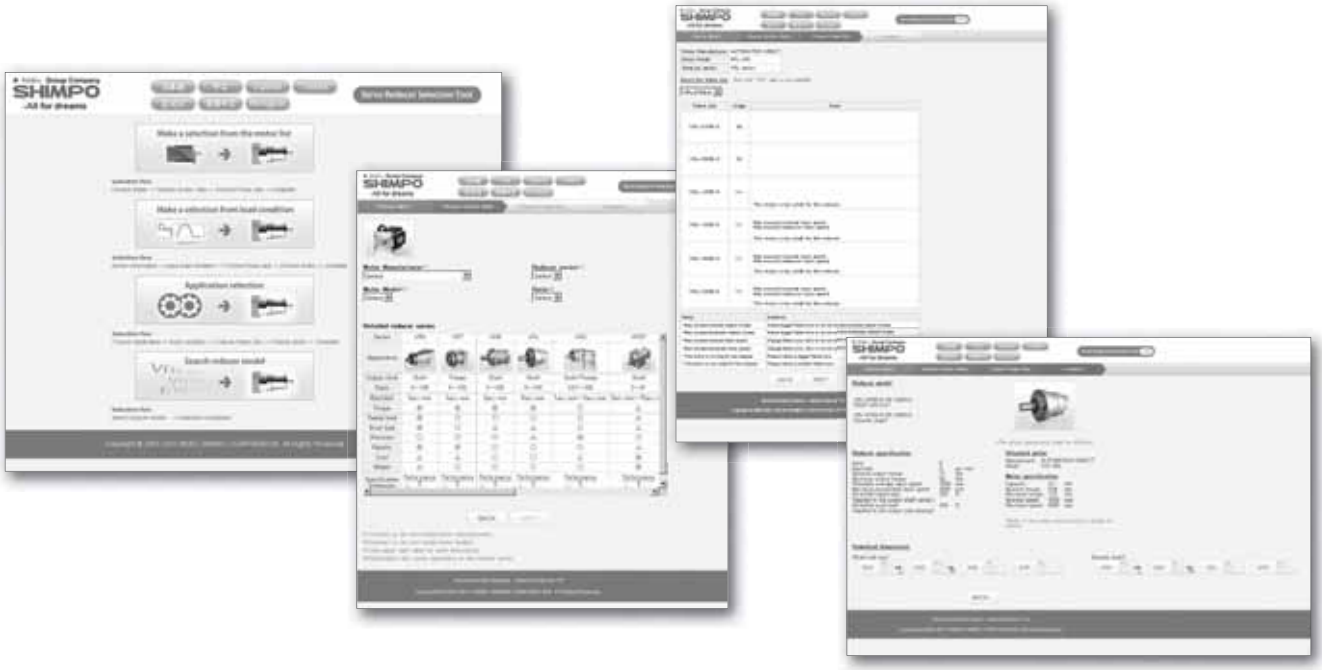

STR-040V – 1-Stage and 2-Stage Specifications with VRSF-B

Frame Size	**040V**					
Stage			**1-Stage**	**2-Stage**		
Ratio	Units	Notes	15	45	75	135
Nominal Torque	[Nm]	*1	27	27	27	27
Acceleration Torque	[Nm]	--	58	58	58	58
No Load Torque	[Nm]	*1	0.5	0.2	0.2	0.2
Nominal Input Speed	[rpm]	*2	900	2700	3000	3000
Maximum Input Speed	[rpm]	*2	3000	5000	5000	5000
Reflected Inertia (Single)	[kg-m²x10⁻⁴]	*3	0.292	--	--	--
Reflected Inertia (≤Ø 8)	[kg-m²x10⁻⁴]	*3	--	0.082	0.06	0.053
Reflected Inertia (≤Ø 14)	[kg-m²x10⁻⁴]	*3	--	0.151	0.131	0.121
Backlash	[arc-min]	--	0	0	0	0
Angular Transmission Accuracy	[arc-min]	--	≤ 1.5	≤ 1.5		
Angular Repeatability Accuracy	[arc-min]	--	± 0.2	± 0.2		
Surface Runout	[µm (max)]	--	10	10	10	10
Weight	[kg]	--	2.5	3.2	3.2	3.2
Maximum Axial Load	[N]	--	999	999	999	999
Maximum Radial Load	[N]	--	669	669	669	669
Maximum Tilting Moment Load	[Nm]	--	33	33	33	33
Efficiency	[%]	--	80	76	76	76
Protection Class	--	*4	IP54 (IP65)			

*1) At nominal input speed

*2) Speeds are at the actuator input. Limits when used with additional gearbox are higher

*3) At input shaft

*4) IP65 (wash-down) is available as an option. Contact NIDEC-SHIMPO for more details and our food grade options

STR-040 Dimensions with VRSF-B

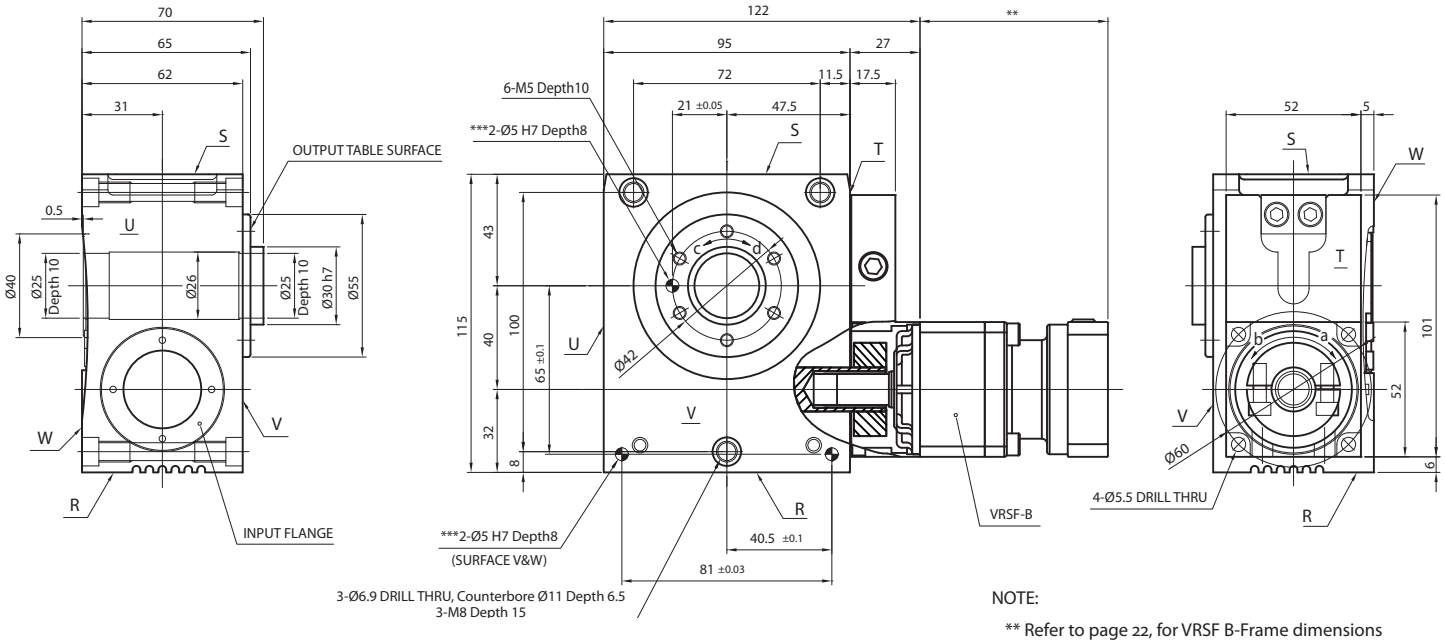

NOTE:

** Refer to page 22, for VRSF B-Frame dimensions

*** Optional

ROTATION:

a=d

a=c (upon special request)

STR-040V – 3-Stage Specifications with VRSF-B

Frame Size	040V					
Stage	**3-Stage**					
Ratio	Units	Notes	225	300	375	525
Nominal Torque	[Nm]	*1	27	27	27	27
Acceleration Torque	[Nm]	--	58	58	58	58
No Load Torque	[Nm]	*1	0.1	0.1	0.1	0.1
Nominal Input Speed	[rpm]	*2	3000	3000	3000	3000
Maximum Input Speed	[rpm]	*2	5000	5000	5000	5000
Reflected Inertia (Single)	[kg-m^{2}x10^{-4}]	*3	--	--	--	--
Reflected Inertia (≤Ø 8)	[kg-m^{2}x10^{-4}]	*3	0.058	0.057	0.057	0.053
Reflected Inertia (≤Ø 14)	[kg-m^{2}x10^{-4}]	*3	0.131	0.131	0.131	0.121
Backlash	[arc-min]	--	0	0	0	0
Angular Transmission Accuracy	[arc-min]	--	≤ 1.5			
Angular Repeatability Accuracy	[arc-min]	--	± 0.2			
Surface Runout	[µm (max)]	--	10	10	10	10
Weight	[kg]	--	3.4	3.4	3.4	3.4
Maximum Axial Load	[N]	--	999	999	999	999
Maximum Radial Load	[N]	--	669	669	669	669
Maximum Tilting Moment Load	[Nm]	--	33	33	33	33
Efficiency	[%]	--	72	72	72	72
Protection Class	--	*4	IP54 (IP65)			

*1) At nominal input speed

*2) Speeds are at the actuator input. Limits when used with additional gearbox are higher

*3) At input shaft

*4) IP65 (wash-down) is available as an option. Contact NIDEC-SHIMPO for more details and our food grade options

STR-040 Dimensions with VRSF-B

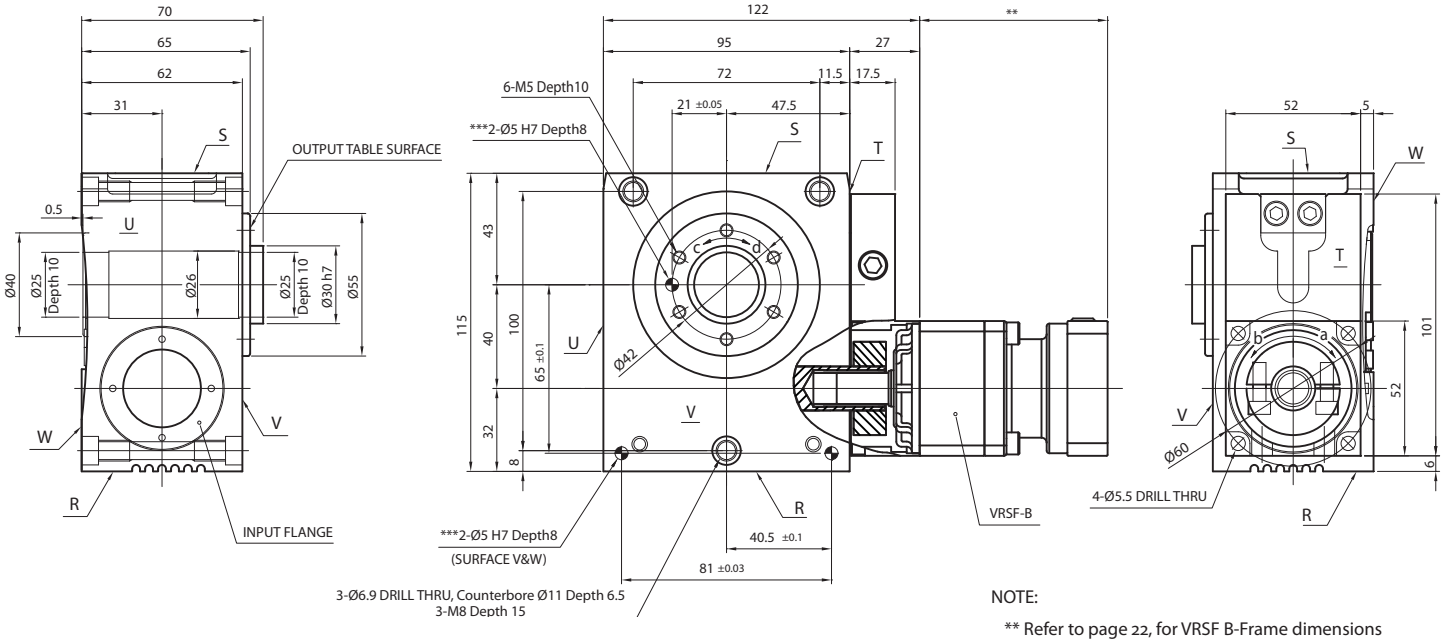

NOTE:

** Refer to page 22, for VRSF B-Frame dimensions

*** Optional

ROTATION:

a=d

a=c (upon special request)

STR-063V – 1-Stage and 2-Stage Specifications with VRB-060

Frame Size	**063V**									
Stage			**1-Stage**	**2-Stage**						
Ratio	Units	Notes	20	60	80	100	120	140	160	180
Nominal Torque	[Nm]	*1	69	69	69	69	69	69	69	69
Acceleration Torque	[Nm]	--	129	129	129	129	129	129	129	129
No Load Torque	[Nm]	*1	0.8	0.1	0.1	0.1	0.1	0.1	0.1	0.1
Nominal Input Speed	[rpm]	*2	800	2400	3000	3000	3000	3000	3000	3000
Maximum Input Speed	[rpm]	*2	3000	6000	6000	6000	6000	6000	6000	6000
Reflected Inertia (Single)	[kg-m^{2}x10^{-4}]	*3	0.862	--	--	--	--	--	--	--
Reflected Inertia (≤Ø 8)	[kg-m^{2}x10^{-4}]	*3	--	0.142	0.097	0.079	0.070	0.064	0.061	0.059
Reflected Inertia (≤Ø 14)	[kg-m^{2}x10^{-4}]	*3	--	0.222	0.172	0.162	0.152	0.142	0.142	0.142
Reflected Inertia (≤Ø 19)	[kg-m^{2}x10^{-4}]	*3	--	0.432	0.382	0.362	0.362	0.352	0.352	0.342
Backlash	[arc-min]	--	0	0	0	0	0	0	0	0
Angular Transmission Accuracy	[arc-min]	--	≤ 1.0	≤ 1.0						
Angular Repeatability Accuracy	[arc-min]	--	± 0.1	± 0.1						
Surface Runout	[µm (max)]	--	10	10	10	10	10	10	10	10
Weight	[kg]	--	5.6	7.0	7.0	7.0	7.0	7.0	7.0	7.0
Maximum Axial Load	[N]	--	1657	1657	1657	1657	1657	1657	1657	1657
Maximum Radial Load	[N]	--	1359	1359	1359	1359	1359	1359	1359	1359
Maximum Tilting Moment Load	[Nm]	--	79	79	79	79	79	79	79	79
Efficiency	[%]	--	82	78	78	78	78	78	78	78
Protection Class	--	*4	IP54 (IP65)							

*1) At nominal input speed
*2) Speeds are at the actuator input. Limits when used with additional gearbox are higher
*3) At input shaft
*4) IP65 (wash-down) is available as an option. Contact NIDEC-SHIMPO for more details and our food grade options

STR-063V – 2-Stage and 3-Stage Specifications with VRB-060

Frame Size	**063V**									
Stage			**2-Stage**	**3-Stage**						
Ratio	Units	Notes	200	300	320	400	500	560	600	700
Nominal Torque	[Nm]	*1	69	69	69	69	69	69	69	69
Acceleration Torque	[Nm]	--	129	129	129	129	129	129	129	129
No Load Torque	[Nm]	*1	0.1	0.1	0.1	0.1	0.1	0.1	0.1	0.1
Nominal Input Speed	[rpm]	*2	3000	3000	3000	3000	3000	3000	3000	3000
Maximum Input Speed	[rpm]	*2	6000	6000	6000	6000	6000	6000	6000	6000
Reflected Inertia (Single)	[kg-m^{2}x10^{-4}]	*3	--	--	--	--	--	---	---	---
Reflected Inertia (≤Ø 8)	[kg-m^{2}x10^{-4}]	*3	0.058	0.057	0.059	0.056	0.055	0.057	0.051	0.055
Reflected Inertia (≤Ø 14)	[kg-m^{2}x10^{-4}]	*3	0.142	0.142	0.142	0.132	0.132	0.142	0.132	0.132
Reflected Inertia (≤Ø 19)	[kg-m^{2}x10^{-4}]	*3	0.342	0.352	0.362	0.352	0.352	0.362	0.342	0.352
Backlash	[arc-min]	--	0	0	0	0	0	0	0	0
Angular Transmission Accuracy	[arc-min]	--	≤ 1.0	≤ 1.0						
Angular Repeatability Accuracy	[arc-min]	--	± 0.1	± 0.1						
Surface Runout	[µm (max)]	--	10	10	10	10	10	10	10	10
Weight	[kg]	--	7.0	7.2	7.2	7.2	7.2	7.2	7.2	7.2
Maximum Axial Load	[N]	--	1657	1657	1657	1657	1657	1657	1657	1657
Maximum Radial Load	[N]	--	1359	1359	1359	1359	1359	1359	1359	1359
Maximum Tilting Moment Load	[Nm]	--	79	79	79	79	79	79	79	79
Efficiency	[%]	--	78	74	74	74	74	74	74	74
Protection Class	--	*4	IP54 (IP65)							

*1) At nominal input speed
*2) Speeds are at the actuator input. Limits when used with additional gearbox are higher
*3) At input shaft
*4) IP65 (wash-down) is available as an option. Contact NIDEC-SHIMPO for more details and our food grade options

STR-063V – 3-Stage Specifications with VRB-060

Frame Size	063V									
Stage	**3-Stage**									
Ratio	Units	Notes	800	900	1000	1200	1400	1600	1800	2000
Nominal Torque	[Nm]	*1	69	69	69	69	69	69	69	69
Acceleration Torque	[Nm]	--	129	129	129	129	129	129	129	129
No Load Torque	[Nm]	*1	0.1	0.1	0.1	0.1	0.1	0.1	0.1	0.1
Nominal Input Speed	[rpm]	*2	3000	3000	3000	3000	3000	3000	3000	3000
Maximum Input Speed	[rpm]	*2	6000	6000	6000	6000	6000	6000	6000	6000
Reflected Inertia (Single)	[kg-m^{2}x10^{-4}]	*3	---	---	---	---	---	---	---	---
Reflected Inertia (≤Ø 8)	[kg-m^{2}x10^{-4}]	*3	0.051	0.055	0.051	0.051	0.051	0.051	0.051	0.051
Reflected Inertia (≤Ø 14)	[kg-m^{2}x10^{-4}]	*3	0.132	0.132	0.132	0.132	0.132	0.132	0.132	0.132
Reflected Inertia (≤Ø 19)	[kg-m^{2}x10^{-4}]	*3	0.342	0.352	0.342	0.342	0.342	0.342	0.342	0.342
Backlash	[arc-min]	--	0	0	0	0	0	0	0	0
Angular Transmission Accuracy	[arc-min]	--	≤ 1.0							
Angular Repeatability Accuracy	[arc-min]	--	± 0.1							
Surface Runout	[µm (max)]	--	10	10	10	10	10	10	10	10
Weight	[kg]	--	7.2	7.2	7.2	7.2	7.2	7.2	7.2	7.2
Maximum Axial Load	[N]	--	1657	1657	1657	1657	1657	1657	1657	1657
Maximum Radial Load	[N]	--	1359	1359	1359	1359	1359	1359	1359	1359
Maximum Tilting Moment Load	[Nm]	--	79	79	79	79	79	79	79	79
Efficiency	[%]	--	74	74	74	74	74	74	74	74
Protection Class	--	*4	IP54 (IP65)							

*1) At nominal input speed
*2) Speeds are at the actuator input. Limits when used with additional gearbox are higher
*3) At input shaft
*4) IP65 (wash-down) is available as an option. Contact NIDEC-SHIMPO for more details and our food grade options

STR-063 Dimensions with VRB-060

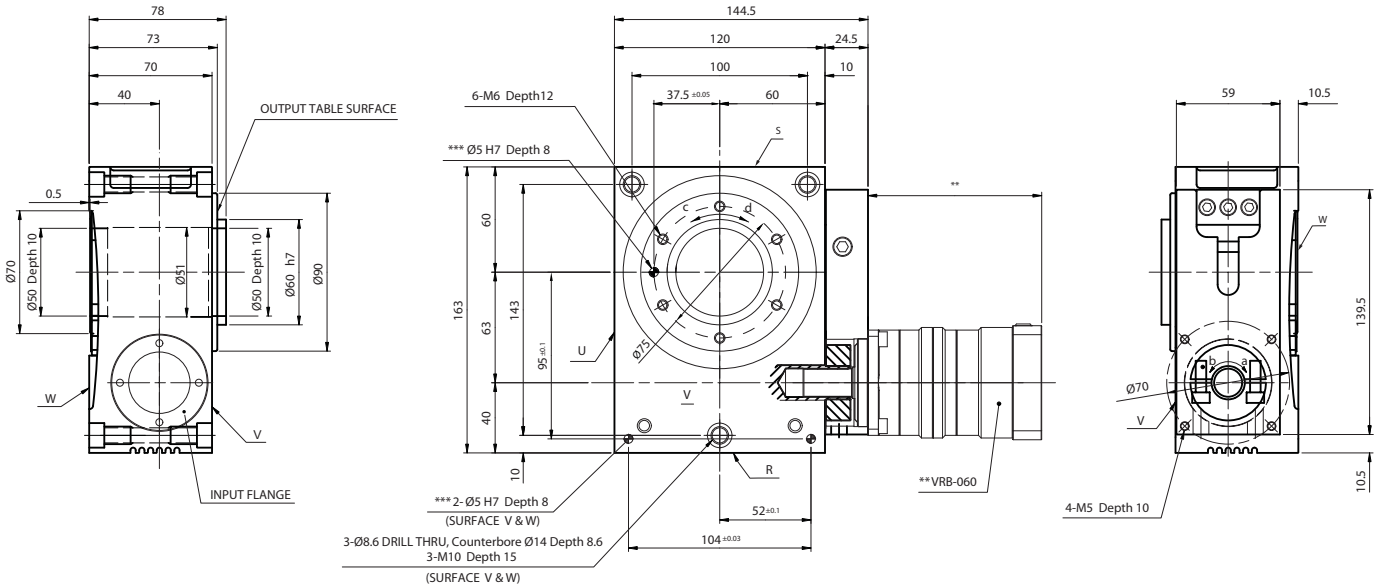

NOTE:

** Refer to page 92, for VRB-060 dimensions
*** Optional

ROTATION:

a=d
a=c (upon special request)

STR

STR-063E – 1-Stage and 2-Stage Specifications with EVB-060

Frame Size	**063E**									
Stage			**1-Stage**	**2-Stage**						
Ratio	Units	Notes	20	60	80	100	120	140	160	180
Nominal Torque	[Nm]	*1	69	69	69	69	69	69	69	69
Acceleration Torque	[Nm]	--	129	129	129	129	129	129	129	129
No Load Torque	[Nm]	*1	0.8	0.4	0.4	0.4	0.4	0.4	0.4	0.4
Nominal Input Speed	[rpm]	*2	800	2400	3000	3000	3000	3000	3000	3000
Maximum Input Speed	[rpm]	*2	3000	6000	6000	6000	6000	6000	6000	6000
Reflected Inertia (Single)	[kg-m^{2}x10^{-4}]	*3	0.862	--	--	--	--	--	--	--
Reflected Inertia (≤Ø 8)	[kg-m^{2}x10^{-4}]	*3	--	0.311	0.266	0.248	0.239	0.234	0.230	0.228
Reflected Inertia (≤Ø 14)	[kg-m^{2}x10^{-4}]	*3	--	0.386	0.341	0.323	0.314	0.309	0.305	0.303
Reflected Inertia (≤Ø 19)	[kg-m^{2}x10^{-4}]	*3	--	0.575	0.53	0.513	0.504	0.498	0.495	0.493
Backlash	[arc-min]	--	0	0	0	0	0	0	0	0
Angular Transmission Accuracy	[arc-min]	--	≤ 1.0	≤ 1.0						
Angular Repeatability Accuracy	[arc-min]	--	± 0.1	± 0.1						
Surface Runout	[µm (max)]	--	10	10	10	10	10	10	10	10
Weight	[kg]	--	5.6	7.4	7.4	7.4	7.4	7.4	7.4	7.4
Maximum Axial Load	[N]	--	1657	1657	1657	1657	1657	1657	1657	1657
Maximum Radial Load	[N]	--	1359	1359	1359	1359	1359	1359	1359	1359
Maximum Tilting Moment Load	[Nm]	--	79	79	79	79	79	79	79	79
Efficiency	[%]	--	82	74	74	74	74	74	74	74
Protection Class	--	*4	IP54 (IP65)							

*1) At nominal input speed
*2) Speeds are at the actuator input. Limits when used with additional gearbox are higher
*3) At input shaft
*4) IP65 (wash-down) is available as an option. Contact NIDEC-SHIMPO for more details and our food grade options

STR-063E – 2-Stage and 3-Stage Specifications with EVB-060

Frame Size	**063E**									
Stage			**2-Stage**	**3-Stage**						
Ratio	Units	Notes	200	300	320	400	500	560	600	700
Nominal Torque	[Nm]	*1	69	69	69	69	69	69	69	69
Acceleration Torque	[Nm]	--	129	129	129	129	129	129	129	129
No Load Torque	[Nm]	*1	0.4	0.2	0.2	0.2	0.2	0.2	0.2	0.2
Nominal Input Speed	[rpm]	*2	3000	3000	3000	3000	3000	3000	3000	3000
Maximum Input Speed	[rpm]	*2	6000	6000	6000	6000	6000	6000	6000	6000
Reflected Inertia (Single)	[kg-m^{2}x10^{-4}]	*3	--	--	--	--	--	--	--	--
Reflected Inertia (≤Ø 8)	[kg-m^{2}x10^{-4}]	*3	0.227	0.073	0.079	0.071	0.071	0.077	0.062	0.07
Reflected Inertia (≤Ø 14)	[kg-m^{2}x10^{-4}]	*3	0.302	0.118	0.124	0.116	0.115	0.122	0.106	0.115
Reflected Inertia (≤Ø 19)	[kg-m^{2}x10^{-4}]	*3	0.491	--	--	--	--	--	--	--
Backlash	[arc-min]	--	0	0	0	0	0	0	0	0
Angular Transmission Accuracy	[arc-min]	--	≤ 1.0	≤ 1.0						
Angular Repeatability Accuracy	[arc-min]	--	± 0.1	± 0.1						
Surface Runout	[µm (max)]	--	10	10	10	10	10	10	10	10
Weight	[kg]	--	7.4	7.2	7.2	7.2	7.2	7.2	7.2	7.2
Maximum Axial Load	[N]	--	1657	1657	1657	1657	1657	1657	1657	1657
Maximum Radial Load	[N]	--	1359	1359	1359	1359	1359	1359	1359	1359
Maximum Tilting Moment Load	[Nm]	--	79	79	79	79	79	79	79	79
Efficiency	[%]	--	74	70	70	70	70	70	70	70
Protection Class	--	*4	IP54 (IP65)							

*1) At nominal input speed
*2) Speeds are at the actuator input. Limits when used with additional gearbox are higher
*3) At input shaft
*4) IP65 (wash-down) is available as an option. Contact NIDEC-SHIMPO for more details and our food grade options

STR-063E – 3-Stage Specifications with EVB-060

Frame Size	063E									
Stage	**3-Stage**									
Ratio	Units	Notes	800	900	1000	1200	1400	1600	1800	2000
Nominal Torque	[Nm]	*1	69	69	69	69	69	69	69	69
Acceleration Torque	[Nm]	--	129	129	129	129	129	129	129	129
No Load Torque	[Nm]	*1	0.2	0.2	0.2	0.2	0.2	0.2	0.2	0.2
Nominal Input Speed	[rpm]	*2	3000	3000	3000	3000	3000	3000	3000	3000
Maximum Input Speed	[rpm]	*2	6000	6000	6000	6000	6000	6000	6000	6000
Reflected Inertia (Single)	[kg-m^{2}x10^{-4}]	*3	--	--	--	--	--	--	--	--
Reflected Inertia (≤Ø 8)	[kg-m^{2}x10^{-4}]	*3	0.061	0.07	0.061	0.061	0.061	0.061	0.061	0.061
Reflected Inertia (≤Ø 14)	[kg-m^{2}x10^{-4}]	*3	0.106	0.115	0.106	0.106	0.105	0.105	0.105	0.105
Reflected Inertia (≤Ø 19)	[kg-m^{2}x10^{-4}]	*3	--	--	--	--	--	--	--	--
Backlash	[arc-min]	--	0	0	0	0	0	0	0	0
Angular Transmission Accuracy	[arc-min]	--	≤ 1.0							
Angular Repeatability Accuracy	[arc-min]	--	± 0.1							
Surface Runout	[µm (max)]	--	10	10	10	10	10	10	10	10
Weight	[kg]	--	7.2	7.2	7.2	7.2	7.2	7.2	7.2	7.2
Maximum Axial Load	[N]	--	1657	1657	1657	1657	1657	1657	1657	1657
Maximum Radial Load	[N]	--	1359	1359	1359	1359	1359	1359	1359	1359
Maximum Tilting Moment Load	[Nm]	--	79	79	79	79	79	79	79	79
Efficiency	[%]	--	70	70	70	70	70	70	70	70
Protection Class	--	*4	IP54 (IP65)							

*1) At nominal input speed
*2) Speeds are at the actuator input. Limits when used with additional gearbox are higher
*3) At input shaft
*4) IP65 (wash-down) is available as an option. Contact NIDEC-SHIMPO for more details and our food grade options

STR-063 Dimensions with EVB-060

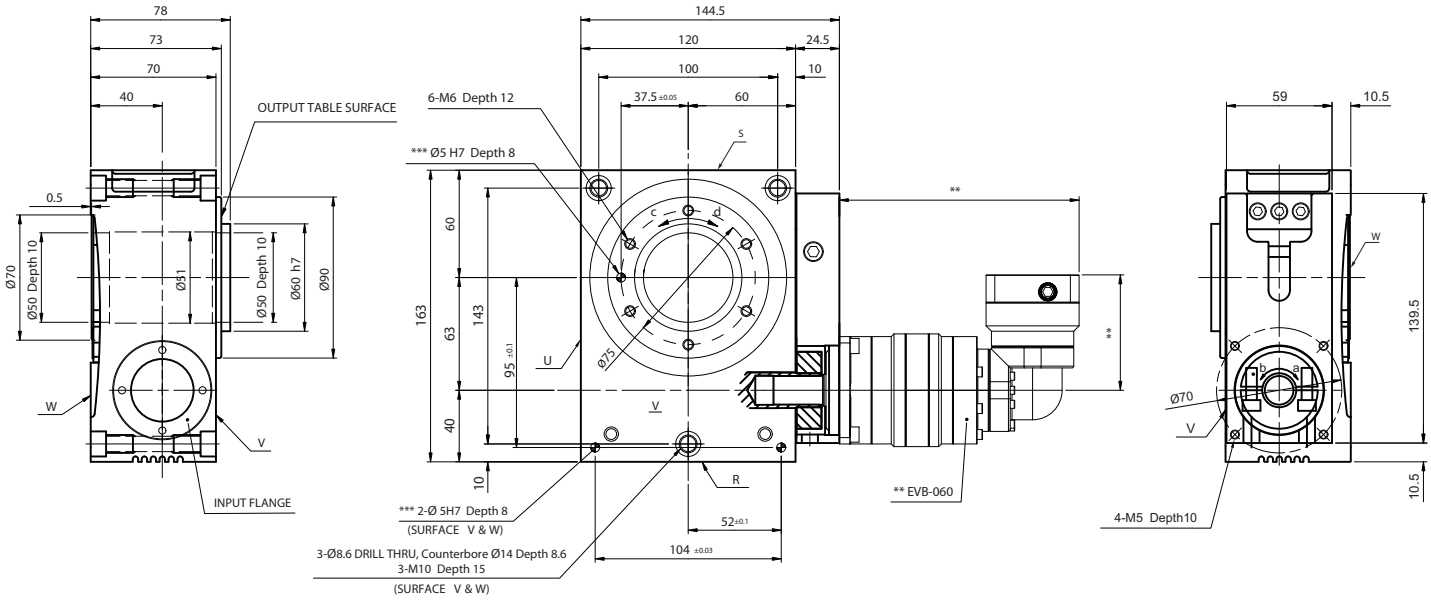

NOTE:
** Refer to page 290, for EVB-060 dimensions
*** Optional

ROTATION:
a=d
a=c (upon special request)

STR

STR-080V – 1-Stage and 2-Stage Specifications with VRB-060

Frame Size			**080V**							
Stage			**1-Stage**	**2-Stage**						
Ratio	Units	Notes	20	60	80	100	120	140	160	180
Nominal Torque	[Nm]	*1	113	113	113	113	113	113	113	113
Acceleration Torque	[Nm]	--	202	202	202	202	202	202	202	202
No Load Torque	[Nm]	*1	1.3	0.1	0.1	0.1	0.1	0.1	0.1	0.1
Nominal Input Speed	[rpm]	*2	700	2100	2800	3000	3000	3000	3000	3000
Maximum Input Speed	[rpm]	*2	2500	6000	6000	6000	6000	6000	6000	6000
Reflected Inertia (Single)	[kg-m^{2}x10^{-4}]	*3	3.066	--	--	--	--	--	--	--
Reflected Inertia (≤Ø 8)	[kg-m^{2}x10^{-4}]	*3	--	0.148	0.103	0.085	0.076	0.070	0.067	0.065
Reflected Inertia (≤Ø 14)	[kg-m^{2}x10-4]	*3	--	0.228	0.178	0.168	0.158	0.148	0.148	0.148
Reflected Inertia (≤Ø 19)	[kg-m^{2}x10^{-4}]	*3	--	0.438	0.388	0.368	0.368	0.358	0.358	0.348
Backlash	[arc-min]	--	0	0	0	0	0	0	0	0
Angular Transmission Accuracy	[arc-min]	--	≤ 0.7	≤ 0.7						
Angular Repeatability Accuracy	[arc-min]	--	± 0.08	± 0.08						
Surface Runout	[µm (max)]	--	10	10	10	10	10	10	10	10
Weight	[kg]	--	11.6	13.0	13.0	13.0	13.0	13.0	13.0	13.0
Maximum Axial Load	[N]	--	3302	3302	3302	3302	3302	3302	3302	3302
Maximum Radial Load	[N]	--	2819	2819	2819	2819	2819	2819	2819	2819
Maximum Tilting Moment Load	[Nm]	--	210	210	210	210	210	210	210	210
Efficiency	[%]	--	80	76	76	76	76	76	76	76
Protection Class	--	*4	IP54 (IP65)							

*1) At nominal input speed
*2) Speeds are at the actuator input. Limits when used with additional gearbox are higher
*3) At input shaft
*4) IP65 (wash-down) is available as an option. Contact NIDEC-SHIMPO for more details and our food grade options

STR-080V – 2-Stage and 3-Stage Specifications with VRB-060

Frame Size			**080V**							
Stage			**2-Stage**	**3-Stage**						
Ratio	Units	Notes	200	300	320	400	500	560	600	700
Nominal Torque	[Nm]	*1	113	113	113	113	113	113	113	113
Acceleration Torque	[Nm]	--	202	202	202	202	202	202	202	202
No Load Torque	[Nm]	*1	0.1	0.1	0.1	0.1	0.1	0.1	0.1	0.1
Nominal Input Speed	[rpm]	*2	3000	3000	3000	3000	3000	3000	3000	3000
Maximum Input Speed	[rpm]	*2	6000	6000	6000	6000	6000	6000	6000	6000
Reflected Inertia (Single)	[kg-m^{2}x10^{-4}]	*3	--	--	--	--	--	--	--	--
Reflected Inertia (≤Ø 8)	[kg-m^{2}x10^{-4}]	*3	0.064	0.063	0.065	0.062	0.061	0.063	0.057	0.061
Reflected Inertia (≤Ø 14)	[kg-m^{2}x10-4]	*3	0.148	0.148	0.148	0.138	0.138	0.148	0.138	0.138
Reflected Inertia (≤Ø 19)	[kg-m^{2}x10^{-4}]	*3	0.348	0.358	0.368	0.358	0.358	0.368	0.348	0.358
Backlash	[arc-min]	--	0	0	0	0	0	0	0	0
Angular Transmission Accuracy	[arc-min]	--	≤ 0.7	≤ 0.7						
Angular Repeatability Accuracy	[arc-min]	--	± 0.08	± 0.08						
Surface Runout	[µm (max)]	--	10	10	10	10	10	10	10	10
Weight	[kg]	--	13.0	13.2	13.2	13.2	13.2	13.2	13.2	13.2
Maximum Axial Load	[N]	--	3302	3302	3302	3302	3302	3302	3302	3302
Maximum Radial Load	[N]	--	2819	2819	2819	2819	2819	2819	2819	2819
Maximum Tilting Moment Load	[Nm]	--	210	210	210	210	210	210	210	210
Efficiency	[%]	--	76	72	72	72	72	72	72	72
Protection Class	--	*4	IP54 (IP65)							

*1) At nominal input speed
*2) Speeds are at the actuator input. Limits when used with additional gearbox are higher
*3) At input shaft
*4) IP65 (wash-down) is available as an option. Contact NIDEC-SHIMPO for more details and our food grade options

STR-080V – 3-Stage Specifications with VRB-060

Frame Size	080V									
Stage	**3-Stage**									
Ratio	Units	Notes	800	900	1000	1200	1400	1600	1800	2000
Nominal Torque	[Nm]	*1	113	113	113	113	113	113	113	113
Acceleration Torque	[Nm]	--	202	202	202	202	202	202	202	202
No Load Torque	[Nm]	*1	0.1	0.1	0.1	0.1	0.1	0.1	0.1	0.1
Nominal Input Speed	[rpm]	*2	3000	3000	3000	3000	3000	3000	3000	3000
Maximum Input Speed	[rpm]	*2	6000	6000	6000	6000	6000	6000	6000	6000
Reflected Inertia (Single)	[kg-m^{2}x10^{-4}]	*3	--	--	--	--	--	--	--	--
Reflected Inertia (≤Ø 8)	[kg-m^{2}x10^{-4}]	*3	0.057	0.061	0.057	0.057	0.057	0.057	0.057	0.057
Reflected Inertia (≤Ø 14)	[kg-m^{2}x10-4]	*3	0.138	0.138	0.138	0.138	0.138	0.138	0.138	0.138
Reflected Inertia (≤Ø 19)	[kg-m^{2}x10^{-4}]	*3	0.348	0.358	0.348	0.348	0.348	0.348	0.348	0.348
Backlash	[arc-min]	--	0	0	0	0	0	0	0	0
Angular Transmission Accuracy	[arc-min]	--	≤ 0.7							
Angular Repeatability Accuracy	[arc-min]	--	± 0.08							
Surface Runout	[µm (max)]	--	10	10	10	10	10	10	10	10
Weight	[kg]	--	13.2	13.2	13.2	13.2	13.2	13.2	13.2	13.2
Maximum Axial Load	[N]	--	3302	3302	3302	3302	3302	3302	3302	3302
Maximum Radial Load	[N]	--	2819	2819	2819	2819	2819	2819	2819	2819
Maximum Tilting Moment Load	[Nm]	--	210	210	210	210	210	210	210	210
Efficiency	[%]	--	72	72	72	72	72	72	72	72
Protection Class	--	*4	IP54 (IP65)							

*1) At nominal input speed
*2) Speeds are at the actuator input. Limits when used with additional gearbox are higher
*3) At input shaft
*4) IP65 (wash-down) is available as an option. Contact NIDEC-SHIMPO for more details and our food grade options

STR-080V Dimensions with VRB-060

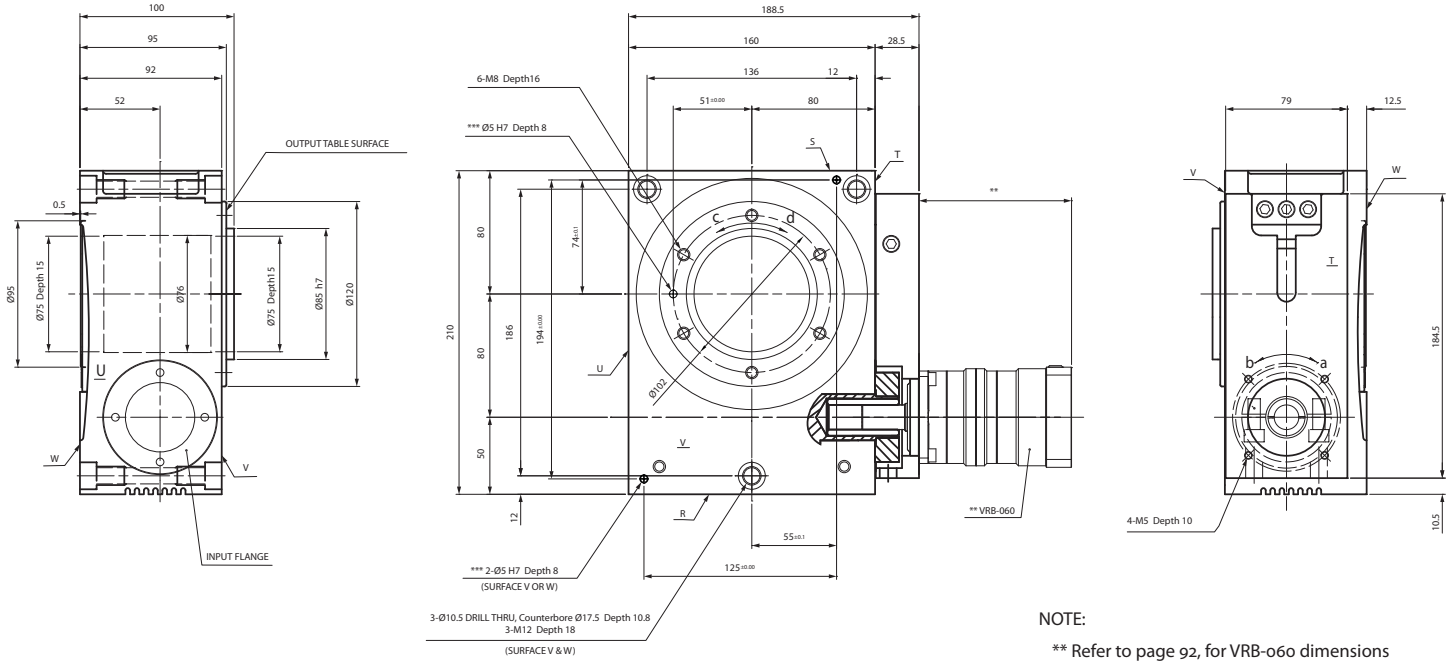

NOTE:
** Refer to page 92, for VRB-060 dimensions
*** Optional

ROTATION:
a=d
a=c (upon special request)

STR

STR-080E – 1-Stage and 2-Stage Specifications with EVB-060

Frame Size	**080E**									
Stage			**1-Stage**	**2-Stage**						
Ratio	Units	Notes	20	60	80	100	120	140	160	180
Nominal Torque	[Nm]	*1	113	113	113	113	113	113	113	113
Acceleration Torque	[Nm]	--	202	202	202	202	202	202	202	202
No Load Torque	[Nm]	*1	1.3	0.4	0.4	0.4	0.4	0.4	0.4	0.4
Nominal Input Speed	[rpm]	*2	700	2100	2800	3000	3000	3000	3000	3000
Maximum Input Speed	[rpm]	*2	2500	6000	6000	6000	6000	6000	6000	6000
Reflected Inertia (Single)	[kg-m^{2}x10^{-4}]	*3	3.066	--	--	--	--	--	--	--
Reflected Inertia (≤Ø 8)	[kg-m^{2}x10^{-4}]	*3	--	0.319	0.274	0.256	0.247	0.242	0.238	0.236
Reflected Inertia (≤Ø 14)	[kg-m^{2}x10^{-4}]	*3	--	0.394	0.349	0.331	0.322	0.317	0.313	0.311
Reflected Inertia (≤Ø 19)	[kg-m^{2}x10^{-4}]	*3	--	0.583	0.538	0.521	0.512	0.506	0.503	0.501
Backlash	[arc-min]	--	0	0	0	0	0	0	0	0
Angular Transmission Accuracy	[arc-min]	--	≤ 0.7	≤ 0.7						
Angular Repeatability Accuracy	[arc-min]	--	± 0.08	± 0.08						
Surface Runout	[µm (max)]	--	10	10	10	10	10	10	10	10
Weight	[kg]	--	11.6	13.4	13.4	13.4	13.4	13.4	13.4	13.4
Maximum Axial Load	[N]	--	3302	3302	3302	3302	3302	3302	3302	3302
Maximum Radial Load	[N]	--	2819	2819	2819	2819	2819	2819	2819	2819
Maximum Tilting Moment Load	[Nm]	--	210	210	210	210	210	210	210	210
Efficiency	[%]	--	80	72	72	72	72	72	72	72
Protection Class	--	*4	IP54 (IP65)							

*1) At nominal input speed
*2) Speeds are at the actuator input. Limits when used with additional gearbox are higher
*3) At input shaft
*4) IP65 (wash-down) is available as an option. Contact NIDEC-SHIMPO for more details and our food grade options

STR-080E – 2-Stage and 3-Stage Specifications with EVB-060

Frame Size	**080E**									
Stage			**2-Stage**	**3-Stage**						
Ratio	Units	Notes	200	300	320	400	500	560	600	700
Nominal Torque	[Nm]	*1	113	113	113	113	113	113	113	113
Acceleration Torque	[Nm]	--	202	202	202	202	202	202	202	202
No Load Torque	[Nm]	*1	0.4	0.3	0.3	0.3	0.3	0.3	0.3	0.3
Nominal Input Speed	[rpm]	*2	3000	3000	3000	3000	3000	3000	3000	3000
Maximum Input Speed	[rpm]	*2	6000	6000	6000	6000	6000	6000	6000	6000
Reflected Inertia (Single)	[kg-m^{2}x10^{-4}]	*3	--	--	--	--	--	--	--	--
Reflected Inertia (≤Ø 8)	[kg-m^{2}x10^{-4}]	*3	0.235	0.081	0.087	0.079	0.079	0.085	0.070	0.078
Reflected Inertia (≤Ø 14)	[kg-m^{2}x10^{-4}]	*3	0.310	0.126	0.132	0.124	0.123	0.130	0.114	0.123
Reflected Inertia (≤Ø 19)	[kg-m^{2}x10^{-4}]	*3	0.499	--	--	--	--	--	--	--
Backlash	[arc-min]	--	0	0	0	0	0	0	0	0
Angular Transmission Accuracy	[arc-min]	--	≤ 0.7	≤ 0.7						
Angular Repeatability Accuracy	[arc-min]	--	± 0.08	± 0.08						
Surface Runout	[µm (max)]	--	10	10	10	10	10	10	10	10
Weight	[kg]	--	13.4	13.2	13.2	13.2	13.2	13.2	13.2	13.2
Maximum Axial Load	[N]	--	3302	3302	3302	3302	3302	3302	3302	3302
Maximum Radial Load	[N]	--	2819	2819	2819	2819	2819	2819	2819	2819
Maximum Tilting Moment Load	[Nm]	--	210	210	210	210	210	210	210	210
Efficiency	[%]	--	72	68	68	68	68	68	68	68
Protection Class	--	*4	IP54 (IP65)							

*1) At nominal input speed
*2) Speeds are at the actuator input. Limits when used with additional gearbox are higher
*3) At input shaft
*4) IP65 (wash-down) is available as an option. Contact NIDEC-SHIMPO for more details and our food grade options

STR-080E – 3-Stage Specifications with EVB-060

Frame Size	080E									
Stage	**3-Stage**									
Ratio	Units	Notes	800	900	1000	1200	1400	1600	1800	2000
Nominal Torque	[Nm]	*1	113	113	113	113	113	113	113	113
Acceleration Torque	[Nm]	--	202	202	202	202	202	202	202	202
No Load Torque	[Nm]	*1	0.3	0.3	0.3	0.3	0.3	0.3	0.3	0.3
Nominal Input Speed	[rpm]	*2	3000	3000	3000	3000	3000	3000	3000	3000
Maximum Input Speed	[rpm]	*2	6000	6000	6000	6000	6000	6000	6000	6000
Reflected Inertia (Single)	[kg-m^{2}x10^{-4}]	*3	--	--	--	--	--	--	--	--
Reflected Inertia (≤Ø 8)	[kg-m^{2}x10^{-4}]	*3	0.069	0.078	0.069	0.069	0.069	0.069	0.069	0.069
Reflected Inertia (≤Ø 14)	[kg-m^{2}x10^{-4}]	*3	0.114	0.123	0.114	0.114	0.113	0.113	0.113	0.113
Reflected Inertia (≤Ø 19)	[kg-m^{2}x10^{-4}]	*3	--	--	--	--	--	--	--	--
Backlash	[arc-min]	--	0	0	0	0	0	0	0	0
Angular Transmission Accuracy	[arc-min]	--	≤ 0.7							
Angular Repeatability Accuracy	[arc-min]	--	± 0.08							
Surface Runout	[µm (max)]	--	10	10	10	10	10	10	10	10
Weight	[kg]	--	13.2	13.2	13.2	13.2	13.2	13.2	13.2	13.2
Maximum Axial Load	[N]	--	3302	3302	3302	3302	3302	3302	3302	3302
Maximum Radial Load	[N]	--	2819	2819	2819	2819	2819	2819	2819	2819
Maximum Tilting Moment Load	[Nm]	--	210	210	210	210	210	210	210	210
Efficiency	[%]	--	68	68	68	68	68	68	68	68
Protection Class	--	*4	IP54 (IP65)							

*1) At nominal input speed
*2) Speeds are at the actuator input. Limits when used with additional gearbox are higher
*3) At input shaft
*4) IP65 (wash-down) is available as an option. Contact NIDEC-SHIMPO for more details and our food grade options

STR-080E Dimensions with EVB-060

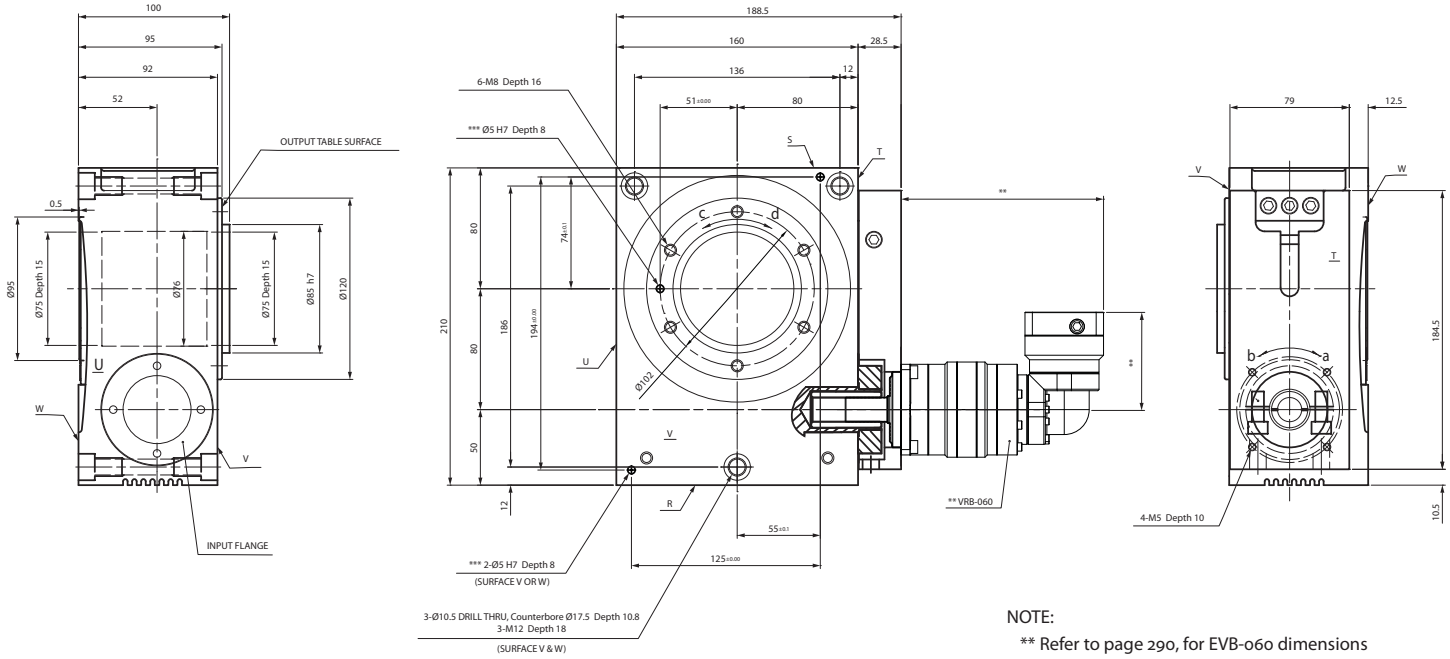

NOTE:
** Refer to page 290, for EVB-060 dimensions
*** Optional

ROTATION:
a=d
a=c (upon special request)

STR

STR-100V – 1-Stage and 2-Stage Specifications with VRB-090

Frame Size	**100V**									
Stage			**1-Stage**	**2-Stage**						
Ratio	Units	Notes	20	60	80	100	120	140	160	180
Nominal Torque	[Nm]	*1	330	330	330	330	330	330	330	330
Acceleration Torque	[Nm]	--	565	565	565	565	565	565	565	565
No Load Torque	[Nm]	*1	2.6	0.3	0.3	0.3	0.3	0.3	0.3	0.3
Nominal Input Speed	[rpm]	*2	600	1800	2400	3000	3000	3000	3000	3000
Maximum Input Speed	[rpm]	*2	2000	6000	6000	6000	6000	6000	6000	6000
Reflected Inertia (Single)	[kg-m^{2}x10^{-4}]	*3	8.687	--	--	--	--	--	--	--
Reflected Inertia (≤Ø 8)	[kg-m^{2}x10^{-4}]	*3	--	--	--	--	--	--	--	--
Reflected Inertia (≤Ø 14)	[kg-m^{2}x10^{-4}]	*3	--	0.742	0.512	0.422	0.382	0.342	0.332	0.312
Reflected Inertia (≤Ø 19)	[kg-m^{2}x10^{-4}]	*3	--	1.222	0.972	0.882	0.842	0.812	0.792	0.782
Reflected Inertia (≤Ø 28)	[kg-m^{2}x10^{-4}]	*3	--	3.222	3.022	2.922	2.822	2.822	2.822	2.822
Backlash	[arc-min]	--	0	0	0	0	0	0	0	0
Angular Transmission Accuracy	[arc-min]	--	≤ 0.7	≤ 0.7						
Angular Repeatability Accuracy	[arc-min]	--	± 0.08	± 0.08						
Surface Runout	[µm (max)]	--	10	10	10	10	10	10	10	10
Weight	[kg]	--	21.5	25.2	25.2	25.2	25.2	25.2	25.2	25.2
Maximum Axial Load	[N]	--	3724	3724	3724	3724	3724	3724	3724	3724
Maximum Radial Load	[N]	--	3109	3109	3109	3109	3109	3109	3109	3109
Maximum Tilting Moment Load	[Nm]	--	284	284	284	284	284	284	284	284
Efficiency	[%]	--	82	78	78	78	78	78	78	78
Protection Class	IP54 (IP65)									

*1) At nominal input speed
*2) Speeds are at the actuator input. Limits when used with additional gearbox are higher
*3) At input shaft
*4) IP65 (wash-down) is available as an option. Contact NIDEC-SHIMPO for more details and our food grade options

STR-100V – 2-Stage and 3-Stage Specifications with VRB-090

Frame Size	**100V**									
Stage			**2-Stage**	**3-Stage**						
Ratio	Units	Notes	200	300	320	400	500	560	600	700
Nominal Torque	[Nm]	*1	330	330	330	330	330	330	330	330
Acceleration Torque	[Nm]	--	565	565	565	565	565	565	565	565
No Load Torque	[Nm]	*1	0.3	0.2	0.2	0.2	0.2	0.2	0.2	0.2
Nominal Input Speed	[rpm]	*2	3000	3000	3000	3000	3000	3000	3000	3000
Maximum Input Speed	[rpm]	*2	6000	6000	6000	6000	6000	6000	6000	6000
Reflected Inertia (Single)	[kg-m^{2}x10^{-4}]	*3	--	--	--	--	--	--	--	--
Reflected Inertia (≤Ø 8)	[kg-m^{2}x10^{-4}]	*3	--	0.152	0.172	0.152	0.142	0.162	0.122	0.142
Reflected Inertia (≤Ø 14)	[kg-m^{2}x10^{-4}]	*3	0.312	0.302	0.322	0.302	0.302	0.312	0.272	0.292
Reflected Inertia (≤Ø 19)	[kg-m^{2}x10^{-4}]	*3	0.772	0.742	0.762	0.742	0.732	0.752	0.722	0.732
Reflected Inertia (≤Ø 28)	[kg-m^{2}x10^{-4}]	*3	2.822	2.722	2.822	2.722	2.722	2.722	2.622	2.722
Backlash	[arc-min]	--	0	0	0	0	0	0	0	0
Angular Transmission Accuracy	[arc-min]	--	≤ 0.7	≤ 0.7						
Angular Repeatability Accuracy	[arc-min]	--	± 0.08	± 0.08						
Surface Runout	[µm (max)]	--	10	10	10	10	10	10	10	10
Weight	[kg]	--	25.2	25.7	25.7	25.7	25.7	25.7	25.7	25.7
Maximum Axial Load	[N]	--	3724	3724	3724	3724	3724	3724	3724	3724
Maximum Radial Load	[N]	--	3109	3109	3109	3109	3109	3109	3109	3109
Maximum Tilting Moment Load	[Nm]	--	284	284	284	284	284	284	284	284
Efficiency	[%]	--	78	74	74	74	74	74	74	74
Protection Class	IP54 (IP65)									

*1) At nominal input speed
*2) Speeds are at the actuator input. Limits when used with additional gearbox are higher
*3) At input shaft
*4) IP65 (wash-down) is available as an option. Contact NIDEC-SHIMPO for more details and our food grade options

STR-100V – 1-Stage and 3-Stage Specifications with VRB-090

Frame Size	100V									
Stage			3-Stage							
Ratio	Units	Notes	800	900	1000	1200	1400	1600	1800	2000
Nominal Torque	[Nm]	*1	330	330	330	330	330	330	330	330
Acceleration Torque	[Nm]	--	565	565	565	565	565	565	565	565
No Load Torque	[Nm]	*1	0.2	0.2	0.2	0.2	0.2	0.2	0.2	0.2
Nominal Input Speed	[rpm]	*2	3000	3000	3000	3000	3000	3000	3000	3000
Maximum Input Speed	[rpm]	*2	6000	6000	6000	6000	6000	6000	6000	6000
Reflected Inertia (Single)	[kg-m^{2}x10^{-4}]	*3	--	--	--	--	--	--	--	--
Reflected Inertia (≤Ø 8)	[kg-m^{2}x10^{-4}]	*3	0.121	0.142	0.120	0.120	0.119	0.119	0.119	0.119
Reflected Inertia (≤Ø 14)	[kg-m^{2}x10^{-4}]	*3	0.272	0.292	0.272	0.272	0.272	0.272	0.272	0.272
Reflected Inertia (≤Ø 19)	[kg-m^{2}x10^{-4}]	*3	0.722	0.732	0.712	0.712	0.712	0.712	0.712	0.712
Reflected Inertia (≤Ø 28)	[kg-m^{2}x10^{-4}]	*3	2.622	2.722	2.622	2.622	2.622	2.622	2.622	2.622
Backlash	[arc-min]	--	0	0	0	0	0	0	0	0
Angular Transmission Accuracy	[arc-min]	--	≤ 0.7							
Angular Repeatability Accuracy	[arc-min]	--	± 0.08							
Surface Runout	[µm (max)]	--	10	10	10	10	10	10	10	10
Weight	[kg]	--	25.7	25.7	25.7	25.7	25.7	25.7	25.7	25.7
Maximum Axial Load	[N]	--	3724	3724	3724	3724	3724	3724	3724	3724
Maximum Radial Load	[N]	--	3109	3109	3109	3109	3109	3109	3109	3109
Maximum Tilting Moment Load	[Nm]	--	284	284	284	284	284	284	284	284
Efficiency	[%]	--	74	74	74	74	74	74	74	74
Protection Class	IP54 (IP65)									

*1) At nominal input speed
*2) Speeds are at the actuator input. Limits when used with additional gearbox are higher
*3) At input shaft
*4) IP65 (wash-down) is available as an option. Contact NIDEC-SHIMPO for more details and our food grade options

STR-100 Dimensions with VRB-090

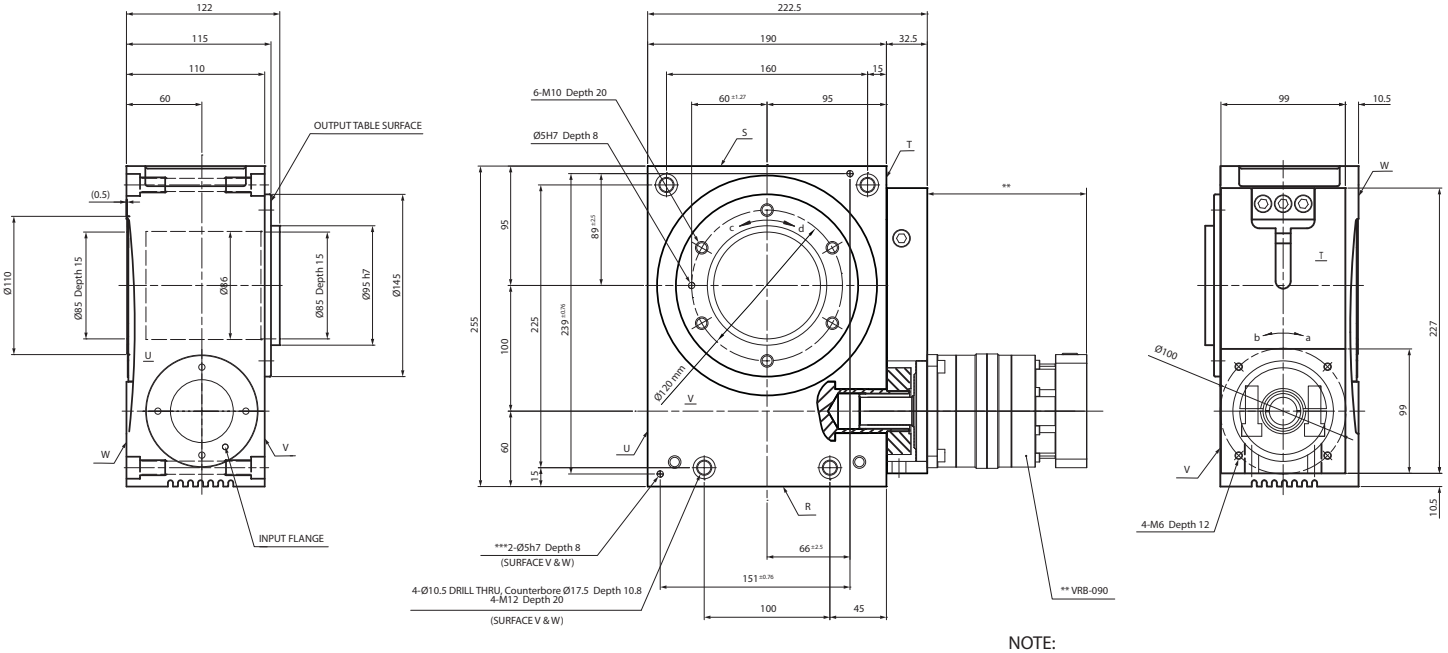

NOTE:

** Refer to page 98, for VRB-090 dimensions
*** Optional

ROTATION:

a=d
a=c (upon special request)

STR

STR-100E – 1-Stage and 2-Stage Specifications with EVB-090

Frame Size			**100E**							
Stage			**1-Stage**	**2-Stage**						
Ratio	Units	Notes	20	60	80	100	120	140	160	180
Nominal Torque	[Nm]	*1	330	330	330	330	330	330	330	330
Acceleration Torque	[Nm]	--	565	565	565	565	565	565	565	565
No Load Torque	[Nm]	*1	2.6	1.3	1.3	1.3	1.3	1.3	1.3	1.3
Nominal Input Speed	[rpm]	*2	600	1800	2400	3000	3000	3000	3000	3000
Maximum Input Speed	[rpm]	*2	2000	6000	6000	6000	6000	6000	6000	6000
Reflected Inertia	[kg-m^{2}x10^{-4}]	*3	8.687	--	--	--	--	--	--	--
Reflected Inertia (≤Ø 8)	[kg-m^{2}x10^{-4}]	*3	--	--	--	--	--	--	--	--
Reflected Inertia (≤Ø 14)	[kg-m^{2}x10^{-4}]	*3	--	2.132	1.912	1.822	1.782	1.752	1.732	1.722
Reflected Inertia (≤Ø 19)	[kg-m^{2}2x10^{-4}]	*3	--	2.462	2.242	2.152	2.112	2.082	2.062	2.052
Reflected Inertia (≤Ø 28)	[kg-m^{2}x10^{-4}]	*3	--	4.592	4.372	4.282	4.232	4.202	4.192	4.182
Backlash	[arc-min]	--	0	0	0	0	0	0	0	0
Angular Transmission Accuracy	[arc-min]	--	≤ 0.7	≤ 0.7						
Angular Repeatability Accuracy	[arc-min]	--	± 0.08	± 0.08						
Surface Runout	[µm (max)]	--	10	10	10	10	10	10	10	10
Weight	[kg]	--	21.5	26.6	26.6	26.6	26.6	26.6	26.6	26.6
Maximum Axial Load	[N]	--	3724	3724	3724	3724	3724	3724	3724	3724
Maximum Radial Load	[N]	--	3109	3109	3109	3109	3109	3109	3109	3109
Maximum Tilting Moment Load	[Nm]	--	284	284	284	284	284	284	284	284
Efficiency	[%]	--	82	74	74	74	74	74	74	74
Protection Class	--	*4	IP54 (IP65)							

*1) At nominal input speed
*2) Speeds are at the actuator input. Limits when used with additional gearbox are higher
*3) At input shaft
*4) IP65 (wash-down) is available as an option. Contact NIDEC-SHIMPO for more details and our food grade options

STR-100E – 2-Stage and 3-Stage Specifications with EVB-090

Frame Size			**100E**							
Stage			**2-Stage**	**3-Stage**						
Ratio	Units	Notes	200	300	320	400	500	560	600	700
Nominal Torque	[Nm]	*1	330	330	330	330	330	330	330	330
Acceleration Torque	[Nm]	--	565	565	565	565	565	565	565	565
No Load Torque	[Nm]	*1	1.3	0.7	0.7	0.7	0.7	0.7	0.7	0.7
Nominal Input Speed	[rpm]	*2	3000	3000	3000	3000	3000	3000	3000	3000
Maximum Input Speed	[rpm]	*2	6000	6000	6000	6000	6000	6000	6000	6000
Reflected Inertia	[kg-m^{2}x10^{-4}]	*3	--	--	--	--	--	--	--	--
Reflected Inertia (≤Ø 8)	[kg-m^{2}x10^{-4}]	*3	--	0.362	0.402	0.352	0.342	0.392	0.272	0.342
Reflected Inertia (≤Ø 14)	[kg-m^{2}x10^{-4}]	*3	1.712	0.432	0.482	0.422	0.422	0.472	0.352	0.422
Reflected Inertia (≤Ø 19)	[kg-m^{2}2x10^{-4}]	*3	2.042	0.622	0.672	0.612	0.612	0.662	0.532	0.612
Reflected Inertia (≤Ø 28)	[kg-m^{2}x10^{-4}]	*3	4.172	--	--	--	--	--	--	--
Backlash	[arc-min]	--	0	0	0	0	0	0	0	0
Angular Transmission Accuracy	[arc-min]	--	≤ 0.7	≤ 0.7						
Angular Repeatability Accuracy	[arc-min]	--	± 0.08	± 0.08						
Surface Runout	[µm (max)]	--	10	10	10	10	10	10	10	10
Weight	[kg]	--	26.6	25.9	25.9	25.9	25.9	25.9	25.9	25.9
Maximum Axial Load	[N]	--	3724	3724	3724	3724	3724	3724	3724	3724
Maximum Radial Load	[N]	--	3109	3109	3109	3109	3109	3109	3109	3109
Maximum Tilting Moment Load	[Nm]	--	284	284	284	284	284	284	284	284
Efficiency	[%]	--	74	70	70	70	70	70	70	70
Protection Class	--	*4	IP54 (IP65)							

*1) At nominal input speed
*2) Speeds are at the actuator input. Limits when used with additional gearbox are higher
*3) At input shaft
*4) IP65 (wash-down) is available as an option. Contact NIDEC-SHIMPO for more details and our food grade options

STR-100E – 3-Stage Specifications with EVB-090

Frame Size	100E									
Stage	**3-Stage**									
Ratio	Units	Notes	800	900	1000	1200	1400	1600	1800	2000
Nominal Torque	[Nm]	*1	330	330	330	330	330	330	330	330
Acceleration Torque	[Nm]	--	565	565	565	565	565	565	565	565
No Load Torque	[Nm]	*1	0.7	0.7	0.7	0.7	0.7	0.7	0.7	0.7
Nominal Input Speed	[rpm]	*2	3000	3000	3000	3000	3000	3000	3000	3000
Maximum Input Speed	[rpm]	*2	6000	6000	6000	6000	6000	6000	6000	6000
Reflected Inertia	[kg-m^{2}x10^{-4}]	*3	--	--	--	--	--	--	--	--
Reflected Inertia (≤Ø 8)	[kg-m^{2}x10^{-4}]	*3	0.272	0.342	0.272	0.272	0.272	0.272	0.272	0.272
Reflected Inertia (≤Ø 14)	[kg-m^{2}x10^{-4}]	*3	0.342	0.412	0.342	0.342	0.342	0.342	0.342	0.342
Reflected Inertia (≤Ø 19)	[kg-m^{2}2x10^{-4}]	*3	0.532	0.602	0.532	0.532	0.532	0.532	0.532	0.532
Reflected Inertia (≤Ø 28)	[kg-m^{2}x10^{-4}]	*3	--	--	--	--	--	--	--	--
Backlash	[arc-min]	--	0	0	0	0	0	0	0	0
Angular Transmission Accuracy	[arc-min]	--	≤ 0.7							
Angular Repeatability Accuracy	[arc-min]	--	± 0.08							
Surface Runout	[µm (max)]	--	10	10	10	10	10	10	10	10
Weight	[kg]	--	25.9	25.9	25.9	25.9	25.9	25.9	25.9	25.9
Maximum Axial Load	[N]	--	3724	3724	3724	3724	3724	3724	3724	3724
Maximum Radial Load	[N]	--	3109	3109	3109	3109	3109	3109	3109	3109
Maximum Tilting Moment Load	[Nm]	--	284	284	284	284	284	284	284	284
Efficiency	[%]	--	70	70	70	70	70	70	70	70
Protection Class	--	*4	IP54 (IP65)							

*1) At nominal input speed
*2) Speeds are at the actuator input. Limits when used with additional gearbox are higher
*3) At input shaft
*4) IP65 (wash-down) is available as an option. Contact NIDEC-SHIMPO for more details and our food grade options

STR-100 Dimensions with EVB-090

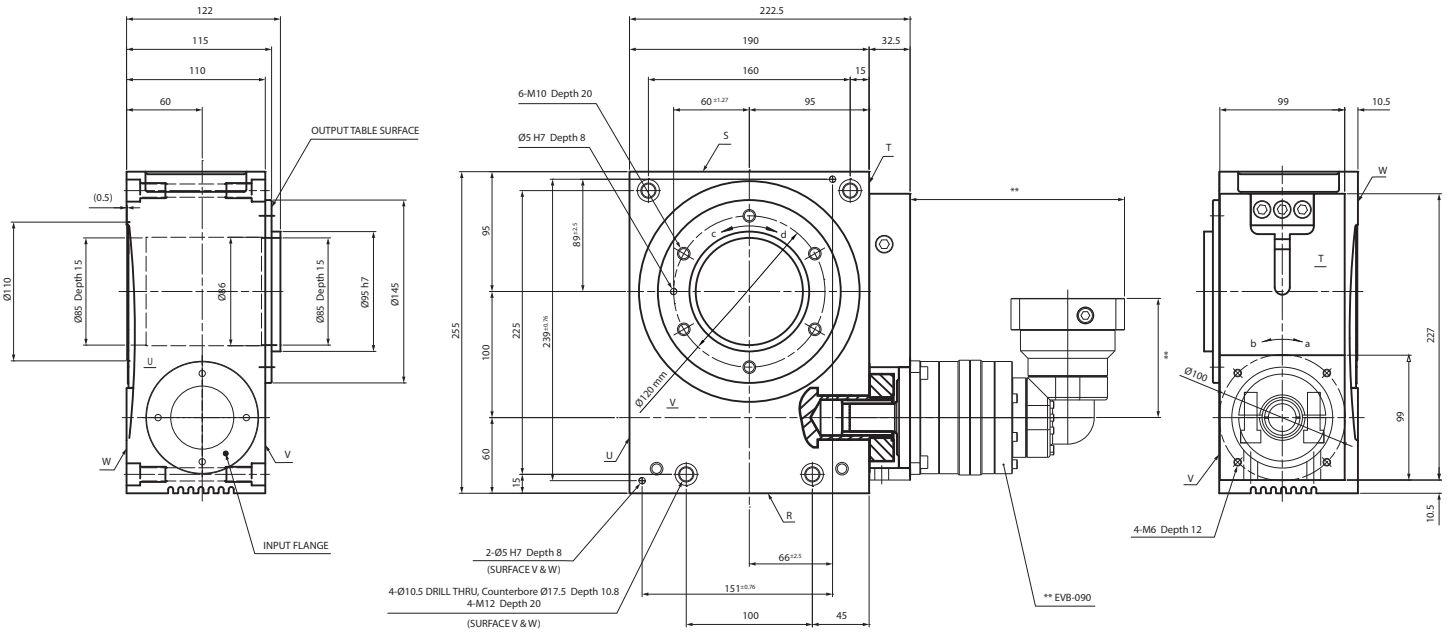

NOTE:
** Refer to page 296, for EVB-090 dimensions
*** Optional

ROTATION:
a=d
a=c (upon special request)

STR-125V – 1-Stage and 2-Stage Specifications with VRB-090

Frame Size	**125V**									
Stage			**1-Stage**	**2-Stage**						
Ratio	Units	Notes	20	60	80	100	120	140	160	180
Nominal Torque	[Nm]	*1	548	548	548	548	548	548	548	548
Acceleration Torque	[Nm]	--	939	939	939	939	939	939	939	939
No Load Torque	[Nm]	*1	3.8	0.4	0.4	0.4	0.4	0.4	0.4	0.4
Nominal Input Speed	[rpm]	*2	600	1800	2400	3000	3000	3000	3000	3000
Maximum Input Speed	[rpm]	*2	1600	4800	6000	6000	6000	6000	6000	6000
Reflected Inertia (Single)	[kg-m^{2}x10^{-4}]	*3	14.85	--	--	--	--	--	--	--
Reflected Inertia (≤Ø 8)	[kg-m^{2}x10^{-4}]	*3	--	--	--	--	--	--	--	--
Reflected Inertia (≤Ø 14)	[kg-m^{2}x10^{-4}]	*3	--	0.757	0.527	0.437	0.397	0.357	0.347	0.327
Reflected Inertia (≤Ø 19)	[kg-m^{2}x10^{-4}]	*3	--	1.237	0.987	0.897	0.857	0.827	0.807	0.797
Reflected Inertia (≤Ø 28)	[kg-m^{2}x10^{-4}]	*3	--	3.237	3.037	2.937	2.837	2.837	2.837	2.837
Backlash	[arc-min]	--	0	0	0	0	0	0	0	0
Angular Transmission Accuracy	[arc-min]	--	≤ 0.7	≤ 0.7						
Angular Repeatability Accuracy	[arc-min]	--	± 0.08	± 0.08						
Surface Runout	[µm (max)]	--	10	10	10	10	10	10	10	10
Weight	[kg]	--	36.3	40.0	40.0	40.0	40.0	40.0	40.0	40.0
Maximum Axial Load	[N]	--	8178	8178	8178	8178	8178	8178	8178	8178
Maximum Radial Load	[N]	--	7452	7452	7452	7452	7452	7452	7452	7452
Maximum Tilting Moment Load	[Nm]	--	764	764	764	764	764	764	764	764
Efficiency	[%]	--	80	76	76	76	76	76	76	76
Protection Class	--	*4	IP54 (IP65)							

*1) At nominal input speed
*2) Speeds are at the actuator input. Limits when used with additional gearbox are higher
*3) At input shaft
*4) IP65 (wash-down) is available as an option. Contact NIDEC-SHIMPO for more details and our food grade options

STR-125V – 2-Stage and 3-Stage Specifications with VRB-090

Frame Size	**125V**									
Stage			**2-Stage**	**3-Stage**						
Ratio	Units	Notes	200	300	320	400	500	560	600	700
Nominal Torque	[Nm]	*1	548	548	548	548	548	548	548	548
Acceleration Torque	[Nm]	--	939	939	939	939	939	939	939	939
No Load Torque	[Nm]	*1	0.4	0.2	0.2	0.2	0.2	0.2	0.2	0.2
Nominal Input Speed	[rpm]	*2	3000	3000	3000	3000	3000	3000	3000	3000
Maximum Input Speed	[rpm]	*2	6000	6000	6000	6000	6000	6000	6000	6000
Reflected Inertia (Single)	[kg-m^{2}x10^{-4}]	*3	--	--	--	--	--	--	--	--
Reflected Inertia (≤Ø 8)	[kg-m^{2}x10^{-4}]	*3	--	0.167	0.187	0.167	0.157	0.177	0.137	0.157
Reflected Inertia (≤Ø 14)	[kg-m^{2}x10^{-4}]	*3	0.327	0.317	0.337	0.317	0.317	0.327	0.287	0.307
Reflected Inertia (≤Ø 19)	[kg-m^{2}x10^{-4}]	*3	0.787	0.757	0.777	0.757	0.747	0.767	0.737	0.747
Reflected Inertia (≤Ø 28)	[kg-m^{2}x10^{-4}]	*3	2.837	2.737	2.837	2.737	2.737	2.737	2.637	2.737
Backlash	[arc-min]	--	0	0	0	0	0	0	0	0
Angular Transmission Accuracy	[arc-min]	--	≤ 0.7	≤ 0.7						
Angular Repeatability Accuracy	[arc-min]	--	± 0.08	± 0.08						
Surface Runout	[µm (max)]	--	10	10	10	10	10	10	10	10
Weight	[kg]	--	40.0	40.5	40.5	40.5	40.5	40.5	40.5	40.5
Maximum Axial Load	[N]	--	8178	8178	8178	8178	8178	8178	8178	8178
Maximum Radial Load	[N]	--	7452	7452	7452	7452	7452	7452	7452	7452
Maximum Tilting Moment Load	[Nm]	--	764	764	764	764	764	764	764	764
Efficiency	[%]	--	76	72	72	72	72	72	72	72
Protection Class	--	*4	IP54 (IP65)							

*1) At nominal input speed
*2) Speeds are at the actuator input. Limits when used with additional gearbox are higher
*3) At input shaft
*4) IP65 (wash-down) is available as an option. Contact NIDEC-SHIMPO for more details and our food grade options

STR-125V – 3-Stage Specifications with VRB-090

Frame Size	125V									
Stage	**3-Stage**									
Ratio	Units	Notes	800	900	1000	1200	1400	1600	1800	2000
Nominal Torque	[Nm]	*1	548	548	548	548	548	548	548	548
Acceleration Torque	[Nm]	--	939	939	939	939	939	939	939	939
No Load Torque	[Nm]	*1	0.2	0.2	0.2	0.2	0.2	0.2	0.2	0.2
Nominal Input Speed	[rpm]	*2	3000	3000	3000	3000	3000	3000	3000	3000
Maximum Input Speed	[rpm]	*2	6000	6000	6000	6000	6000	6000	6000	6000
Reflected Inertia (Single)	[kg-m^{2}x10^{-4}]	*3	--	--	--	--	--	--	--	--
Reflected Inertia (≤Ø 8)	[kg-m^{2}x10^{-4}]	*3	0.136	0.157	0.135	0.135	0.134	0.134	0.134	0.134
Reflected Inertia (≤Ø 14)	[kg-m^{2}x10^{-4}]	*3	0.287	0.307	0.287	0.287	0.287	0.287	0.287	0.287
Reflected Inertia (≤Ø 19)	[kg-m^{2}x10^{-4}]	*3	0.737	0.747	0.727	0.727	0.727	0.727	0.727	0.727
Reflected Inertia (≤Ø 28)	[kg-m^{2}x10^{-4}]	*3	2.637	2.737	2.637	2.637	2.637	2.637	2.637	2.637
Backlash	[arc-min]	--	0	0	0	0	0	0	0	0
Angular Transmission Accuracy	[arc-min]	--	≤ 0.7							
Angular Repeatability Accuracy	[arc-min]	--	± 0.08							
Surface Runout	[µm (max)]	--	10	10	10	10	10	10	10	10
Weight	[kg]	--	40.5	40.5	40.5	40.5	40.5	40.5	40.5	40.5
Maximum Axial Load	[N]	--	8178	8178	8178	8178	8178	8178	8178	8178
Maximum Radial Load	[N]	--	7452	7452	7452	7452	7452	7452	7452	7452
Maximum Tilting Moment Load	[Nm]	--	764	764	764	764	764	764	764	764
Efficiency	[%]	--	72	72	72	72	72	72	72	72
Protection Class	--	*4	IP54 (IP65)							

*1) At nominal input speed
*2) Speeds are at the actuator input. Limits when used with additional gearbox are higher
*3) At input shaft
*4) IP65 (wash-down) is available as an option. Contact NIDEC-SHIMPO for more details and our food grade options

STR-125 Dimensions with VRB-090

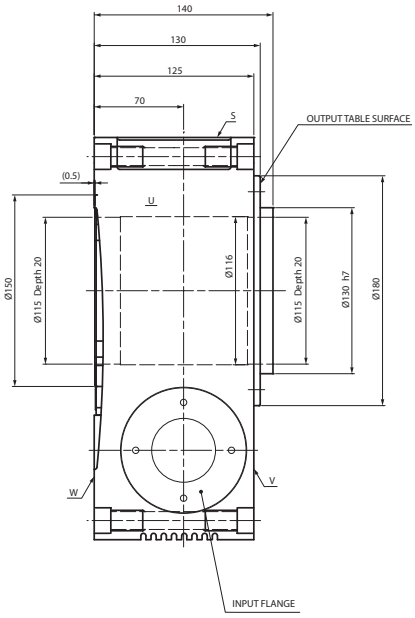

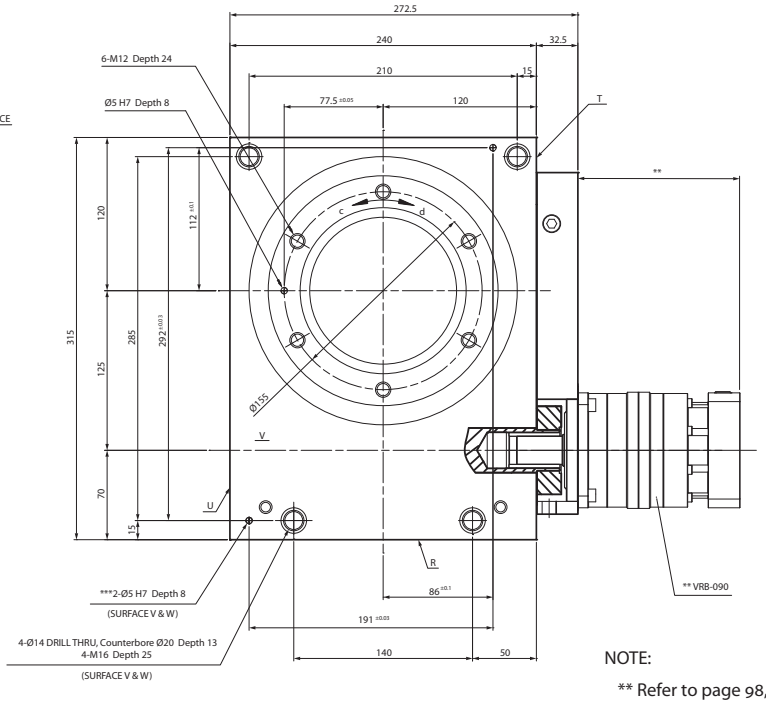

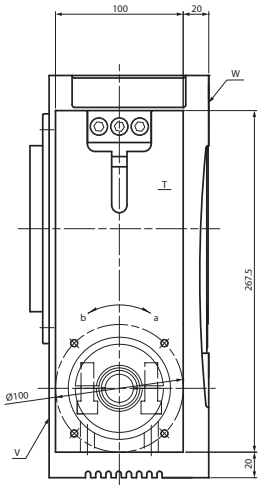

NOTE:

** Refer to page 98, for VRB-090 dimensions
*** Optional

ROTATION:

a=d
a=c (upon special request)

STR

STR-125E – 1-Stage and 2-Stage Specifications with EVB-090

Frame Size			**125E**							
Stage			**1-Stage**	**2-Stage**						
Ratio	Units	Notes	20	60	80	100	120	140	160	180
Nominal Torque	[Nm]	*1	548	548	548	548	548	548	548	548
Acceleration Torque	[Nm]	--	939	939	939	939	939	939	939	939
No Load Torque	[Nm]	*1	3.8	1.3	1.3	1.3	1.3	1.3	1.3	1.3
Nominal Input Speed	[rpm]	*2	600	1800	2400	3000	3000	3000	3000	3000
Maximum Input Speed	[rpm]	*2	1600	4800	6000	6000	6000	6000	6000	6000
Reflected Inertia (Single)	[kg-m^{2}x10^{-4}]	*3	14.85	--	--	--	--	--	--	--
Reflected Inertia (≤Ø 8)	[kg-m^{2}x10^{-4}]	*3	--	--	--	--	--	--	--	--
Reflected Inertia (≤Ø 14)	[kg-m^{2}x10^{-4}]	*3	--	2.147	1.927	1.837	1.797	1.767	1.747	1.737
Reflected Inertia (≤Ø 19)	[kg-m^{2}x10^{-4}]	*3	--	2.477	2.257	2.167	2.127	2.097	2.077	2.067
Reflected Inertia (≤Ø 28)	[kg-m^{2}x10^{-4}]	*3	--	4.607	4.387	4.297	4.247	4.217	4.207	4.197
Backlash	[arc-min]	--	0	0	0	0	0	0	0	0
Angular Transmission Accuracy	[arc-min]	--	≤ 0.7	≤ 0.7						
Angular Repeatability Accuracy	[arc-min]	--	± 0.08	± 0.08						
Surface Runout	[µm (max)]	--	10	10	10	10	10	10	10	10
Weight	[kg]	--	36.3	41.4	41.4	41.4	41.4	41.4	41.4	41.4
Maximum Axial Load	[N]	--	8178	8178	8178	8178	8178	8178	8178	8178
Maximum Radial Load	[N]	--	7452	7452	7452	7452	7452	7452	7452	7452
Maximum Tilting Moment Load	[Nm]	--	764	764	764	764	764	764	764	764
Efficiency	[%]	--	80	72	72	72	72	72	72	72
Protection Class	--	*4	IP54 (IP65)							

*1) At nominal input speed
*2) Speeds are at the actuator input. Limits when used with additional gearbox are higher
*3) At input shaft
*4) IP65 (wash-down) is available as an option. Contact NIDEC-SHIMPO for more details and our food grade options

STR-125E – 2-Stage and 3-Stage Specifications with EVB-090

Frame Size			**125E**							
Stage			**2-Stage**	**3-Stage**						
Ratio	Units	Notes	200	300	320	400	500	560	600	700
Nominal Torque	[Nm]	*1	548	548	548	548	548	548	548	548
Acceleration Torque	[Nm]	--	939	939	939	939	939	939	939	939
No Load Torque	[Nm]	*1	1.3	0.7	0.7	0.7	0.7	0.7	0.7	0.7
Nominal Input Speed	[rpm]	*2	3000	3000	3000	3000	3000	3000	3000	3000
Maximum Input Speed	[rpm]	*2	6000	6000	6000	6000	6000	6000	6000	6000
Reflected Inertia (Single)	[kg-m^{2}x10^{-4}]	*3	--	--	--	--	--	--	--	--
Reflected Inertia (≤Ø 8)	[kg-m^{2}x10^{-4}]	*3	--	0.377	0.417	0.367	0.357	0.407	0.287	0.357
Reflected Inertia (≤Ø 14)	[kg-m^{2}x10^{-4}]	*3	1.727	0.447	0.497	0.437	0.437	0.487	0.367	0.437
Reflected Inertia (≤Ø 19)	[kg-m^{2}x10^{-4}]	*3	2.057	0.637	0.687	0.627	0.627	0.677	0.547	0.627
Reflected Inertia (≤Ø 28)	[kg-m^{2}x10^{-4}]	*3	4.187	--	--	--	--	--	--	--
Backlash	[arc-min]	--	0	0	0	0	0	0	0	0
Angular Transmission Accuracy	[arc-min]	--	≤ 0.7	≤ 0.7						
Angular Repeatability Accuracy	[arc-min]	--	± 0.08	± 0.08						
Surface Runout	[µm (max)]	--	10	10	10	10	10	10	10	10
Weight	[kg]	--	41.4	40.7	40.7	40.7	40.7	40.7	40.7	40.7
Maximum Axial Load	[N]	--	8178	8178	8178	8178	8178	8178	8178	8178
Maximum Radial Load	[N]	--	7452	7452	7452	7452	7452	7452	7452	7452
Maximum Tilting Moment Load	[Nm]	--	764	764	764	764	764	764	764	764
Efficiency	[%]	--	72	68	68	68	68	68	68	68
Protection Class	--	*4	IP54 (IP65)							

*1) At nominal input speed
*2) Speeds are at the actuator input. Limits when used with additional gearbox are higher
*3) At input shaft
*4) IP65 (wash-down) is available as an option. Contact NIDEC-SHIMPO for more details and our food grade options

STR-125E – 3-Stage Specifications with EVB-090

Frame Size	125E									
Stage	**3-Stage**									
Ratio	Units	Notes	800	900	1000	1200	1400	1600	1800	2000
Nominal Torque	[Nm]	*1	548	548	548	548	548	548	548	548
Acceleration Torque	[Nm]	--	939	939	939	939	939	939	939	939
No Load Torque	[Nm]	*1	0.7	0.7	0.7	0.7	0.7	0.7	0.7	0.7
Nominal Input Speed	[rpm]	*2	3000	3000	3000	3000	3000	3000	3000	3000
Maximum Input Speed	[rpm]	*2	6000	6000	6000	6000	6000	6000	6000	6000
Reflected Inertia (Single)	[kg-m^{2}x10^{-4}]	*3	--	--	--	--	--	--	--	--
Reflected Inertia (≤Ø 8)	[kg-m^{2}x10^{-4}]	*3	0.287	0.357	0.287	0.287	0.287	0.287	0.287	0.287
Reflected Inertia (≤Ø 14)	[kg-m^{2}x10^{-4}]	*3	0.357	0.427	0.357	0.357	0.357	0.357	0.357	0.357
Reflected Inertia (≤Ø 19)	[kg-m^{2}x10^{-4}]	*3	0.547	0.617	0.547	0.547	0.547	0.547	0.547	0.547
Reflected Inertia (≤Ø 28)	[kg-m^{2}x10^{-4}]	*3	--	--	--	--	--	--	--	--
Backlash	[arc-min]	--	0	0	0	0	0	0	0	0
Angular Transmission Accuracy	[arc-min]	--	≤ 0.7							
Angular Repeatability Accuracy	[arc-min]	--	± 0.08							
Surface Runout	[µm (max)]	--	10	10	10	10	10	10	10	10
Weight	[kg]	--	40.7	40.7	40.7	40.7	40.7	40.7	40.7	40.7
Maximum Axial Load	[N]	--	8178	8178	8178	8178	8178	8178	8178	8178
Maximum Radial Load	[N]	--	7452	7452	7452	7452	7452	7452	7452	7452
Maximum Tilting Moment Load	[Nm]	--	764	764	764	764	764	764	764	764
Efficiency	[%]	--	68	68	68	68	68	68	68	68
Protection Class	--	*4	IP54 (IP65)							

*1) At nominal input speed
*2) Speeds are at the actuator input. Limits when used with additional gearbox are higher
*3) At input shaft
*4) IP65 (wash-down) is available as an option. Contact NIDEC-SHIMPO for more details and our food grade options

STR-125 Dimensions with EVB-090

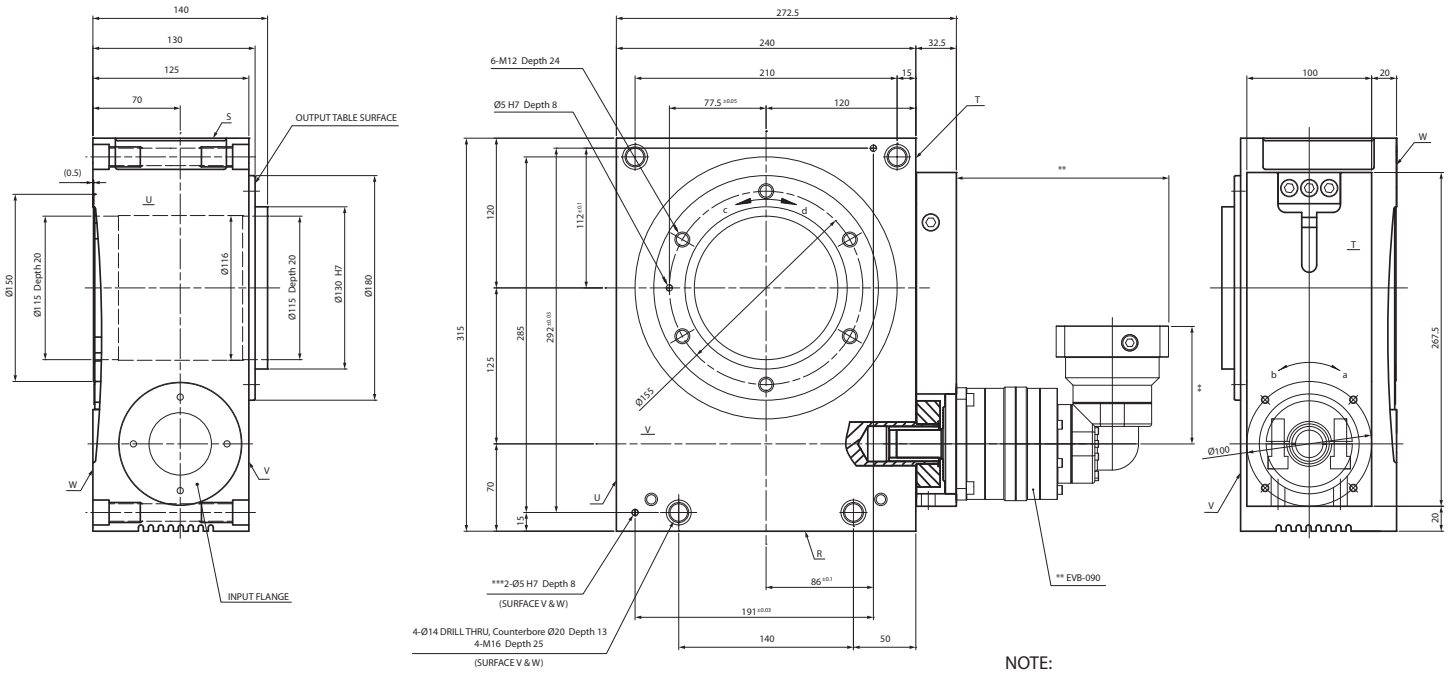

NOTE:
** Refer to page 296, for EVB-090 dimensions
*** Optional

ROTATION:
a=d
a=c (upon special request)

STR-160V – 1-Stage and 2-Stage Specifications with VRB-115

Frame Size	**160V**									
Stage			**1-Stage**	**2-Stage**						
Ratio	Units	Notes	20	60	80	100	120	140	160	180
Nominal Torque	[Nm]	*1	1165	1165	1165	1165	1165	1165	1165	1165
Acceleration Torque	[Nm]	--	1888	1888	1888	1888	1888	1888	1888	1888
No Load Torque	[Nm]	*1	6.6	1.1	1.1	1.1	1.1	1.1	1.1	1.1
Nominal Input Speed	[rpm]	*2	500	1500	2000	2500	3000	3000	3000	3000
Maximum Input Speed	[rpm]	*2	1000	3000	4000	5000	6000	6000	6000	6000
Reflected Inertia (Single)	[kg-m²x10⁻⁴]	*3	46.99	--	--	--	--	--	--	--
Reflected Inertia (≤Ø 14)	[kg-m²x10⁻⁴]	*3	--	--	--	--	--	--	--	--
Reflected Inertia (≤Ø 19)	[kg-m²x10⁻⁴]	*3	--	3.417	2.117	1.717	1.417	1.217	1.117	1.097
Reflected Inertia (≤Ø 28)	[kg-m²x10⁻⁴]	*3	--	5.417	4.217	3.717	3.417	3.317	3.217	3.117
Reflected Inertia (≤Ø 38)	[kg-m²x10⁻⁴]	*3	--	13.12	12.12	11.12	11.12	11.12	11.12	11.12
Backlash	[arc-min]	--	0	0	0	0	0	0	0	0
Angular Transmission Accuracy	[arc-min]	--	≤ 1.5	≤ 1.5						
Angular Repeatability Accuracy	[arc-min]	--	± 0.15	± 0.15						
Surface Runout	[µm (max)]	--	20	20	20	20	20	20	20	20
Weight	[kg]	--	126	134	134	134	134	134	134	134
Maximum Axial Load	[N]	--	17170	17170	17170	17170	17170	17170	17170	17170
Maximum Radial Load	[N]	--	7283	7283	7283	7283	7283	7283	7283	7283
Maximum Tilting Moment Load	[Nm]	--	1216.3	1216.3	1216.3	1216.3	1216.3	1216.3	1216.3	1216.3
Efficiency	[%]	--	80	76	76	76	76	76	76	76
Protection Class	--	*4	IP54 (IP65)							

*1) At nominal input speed
*2) Speeds are at the actuator input. Limits when used with additional gearbox are higher
*3) At input shaft
*4) IP65 (wash-down) is available as an option. Contact NIDEC-SHIMPO for more details and our food grade options

STR-160V – 2-Stage and 3-Stage Specifications with VRB-115

Frame Size	**160V**									
Stage			**2-Stage**	**3-Stage**						
Ratio	Units	Notes	200	300	320	400	500	560	600	700
Nominal Torque	[Nm]	*1	1165	1165	1165	1165	1165	1165	1165	1165
Acceleration Torque	[Nm]	--	1888	1888	1888	1888	1888	1888	1888	1888
No Load Torque	[Nm]	*1	1.1	0.5	0.5	0.5	0.5	0.5	0.5	0.5
Nominal Input Speed	[rpm]	*2	3000	3000	3000	3000	3000	3000	3000	3000
Maximum Input Speed	[rpm]	*2	6000	6000	6000	6000	6000	6000	6000	6000
Reflected Inertia (Single)	[kg-m²x10⁻⁴]	*3	--	--	--	--	--	--	--	--
Reflected Inertia (≤Ø 14)	[kg-m²x10⁻⁴]	*3	--	0.547	0.597	0.517	0.497	0.557	0.407	0.487
Reflected Inertia (≤Ø 19)	[kg-m²x10⁻⁴]	*3	1.097	0.977	1.037	0.947	0.937	0.997	0.857	0.927
Reflected Inertia (≤Ø 28)	[kg-m²x10⁻⁴]	*3	3.117	2.917	3.017	2.917	2.917	2.917	2.817	2.817
Reflected Inertia (≤Ø 38)	[kg-m²x10⁻⁴]	*3	11.12	11.12	11.12	11.12	11.12	11.12	10.12	11.12
Backlash	[arc-min]	--	0	0	0	0	0	0	0	0
Angular Transmission Accuracy	[arc-min]	--	≤ 1.5	≤ 1.5						
Angular Repeatability Accuracy	[arc-min]	--	± 0.15	± 0.15						
Surface Runout	[µm (max)]	--	20	20	20	20	20	20	20	20
Weight	[kg]	--	134	135	135	135	135	135	135	135
Maximum Axial Load	[N]	--	17170	17170	17170	17170	17170	17170	17170	17170
Maximum Radial Load	[N]	--	7283	7283	7283	7283	7283	7283	7283	7283
Maximum Tilting Moment Load	[Nm]	--	1216.3	1216.3	1216.3	1216.3	1216.3	1216.3	1216.3	1216.3
Efficiency	[%]	--	76	72	72	72	72	72	72	72
Protection Class	--	*4	IP54 (IP65)							

*1) At nominal input speed
*2) Speeds are at the actuator input. Limits when used with additional gearbox are higher
*3) At input shaft
*4) IP65 (wash-down) is available as an option. Contact NIDEC-SHIMPO for more details and our food grade options

STR-160V – 3-Stage Specifications with VRB-115

Frame Size	160V									
Stage	**3-Stage**									
Ratio	Units	Notes	800	900	1000	1200	1400	1600	1800	2000
Nominal Torque	[Nm]	*1	1165	1165	1165	1165	1165	1165	1165	1165
Acceleration Torque	[Nm]	--	1888	1888	1888	1888	1888	1888	1888	1888
No Load Torque	[Nm]	*1	0.5	0.5	0.5	0.5	0.5	0.5	0.5	0.5
Nominal Input Speed	[rpm]	*2	3000	3000	3000	3000	3000	3000	3000	3000
Maximum Input Speed	[rpm]	*2	6000	6000	6000	6000	6000	6000	6000	6000
Reflected Inertia (Single)	[kg-m^{2}x10^{-4}]	*3	--	--	--	--	--	--	--	--
Reflected Inertia (≤Ø 14)	[kg-m^{2}x10^{-4}]	*3	0.397	0.487	0.397	0.397	0.397	0.397	0.387	0.387
Reflected Inertia (≤Ø 19)	[kg-m^{2}x10^{-4}]	*3	0.847	0.917	0.847	0.847	0.847	0.847	0.847	0.847
Reflected Inertia (≤Ø 28)	[kg-m^{2}x10^{-4}]	*3	2.817	2.817	2.817	2.817	2.817	2.817	2.817	2.817
Reflected Inertia (≤Ø 38)	[kg-m^{2}x10^{-4}]	*3	10.12	11.12	10.12	10.12	10.12	10.12	10.12	10.12
Backlash	[arc-min]	--	0	0	0	0	0	0	0	0
Angular Transmission Accuracy	[arc-min]	--	≤ 1.5							
Angular Repeatability Accuracy	[arc-min]	--	± 0.15							
Surface Runout	[µm (max)]	--	20	20	20	20	20	20	20	20
Weight	[kg]	--	135	135	135	135	135	135	135	135
Maximum Axial Load	[N]	--	17170	17170	17170	17170	17170	17170	17170	17170
Maximum Radial Load	[N]	--	7283	7283	7283	7283	7283	7283	7283	7283
Maximum Tilting Moment Load	[Nm]	--	1216.3	1216.3	1216.3	1216.3	1216.3	1216.3	1216.3	1216.3
Efficiency	[%]	--	72	72	72	72	72	72	72	72
Protection Class	--	*4	IP54 (IP65)							

*1) At nominal input speed
*2) Speeds are at the actuator input. Limits when used with additional gearbox are higher
*3) At input shaft
*4) IP65 (wash-down) is available as an option. Contact NIDEC-SHIMPO for more details and our food grade options

STR-160 Dimensions with VRB-115

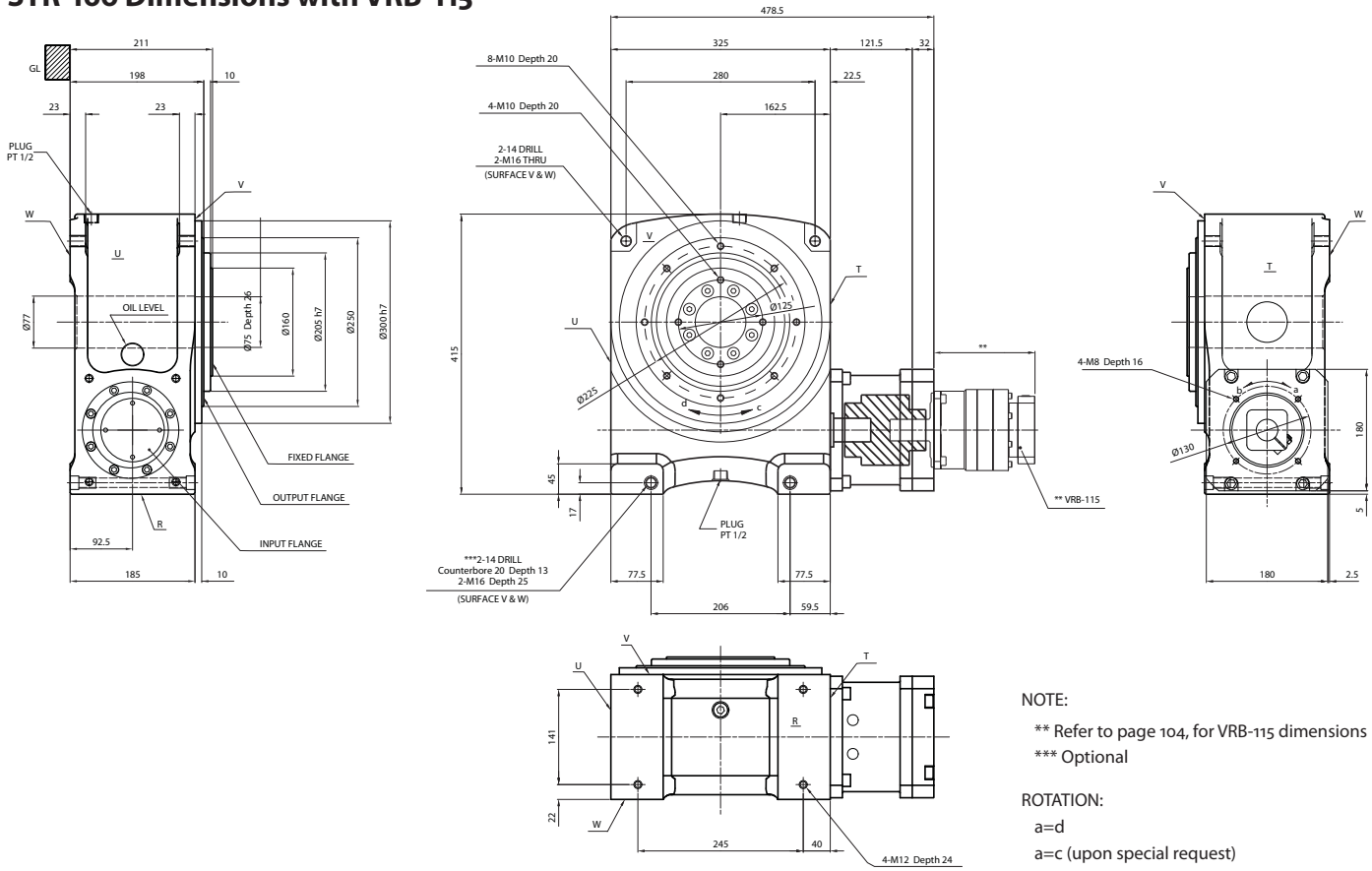

NOTE:

** Refer to page 104, for VRB-115 dimensions
*** Optional

ROTATION:

a=d
a=c (upon special request)

STR

STR-160E – 1-Stage and 2-Stage Specifications with EVB-115

Frame Size	**160E**									
Stage			**1-Stage**	**2-Stage**						
Ratio	Units	Notes	20	60	80	100	120	140	160	180
Nominal Torque	[Nm]	*1	1165	1165	1165	1165	1165	1165	1165	1165
Acceleration Torque	[Nm]	--	1888	1888	1888	1888	1888	1888	1888	1888
No Load Torque	[Nm]	*1	6.6	2.2	2.2	2.2	2.2	2.2	2.2	2.2
Nominal Input Speed	[rpm]	*2	500	1500	2000	2500	3000	3000	3000	3000
Maximum Input Speed	[rpm]	*2	1000	3000	4000	5000	6000	6000	6000	6000
Reflected Inertia (Single)	[kg-m^{2}x10^{-4}]	*3	46.99	--	--	--	--	--	--	--
Reflected Inertia (≤Ø 14)	[kg-m^{2}x10^{-4}]	*3	--	--	--	--	--	--	--	--
Reflected Inertia (≤Ø 19)	[kg-m^{2}x10^{-4}]	*3	--	6.857	5.607	5.137	4.887	4.767	4.667	4.607
Reflected Inertia (≤Ø 28)	[kg-m^{2}x10^{-4}]	*3	--	8.457	7.197	6.727	6.477	6.357	6.257	6.197
Reflected Inertia (≤Ø 38)	[kg-m^{2}x10^{-4}]	*3	--	15.53	14.27	13.81	13.55	13.43	13.34	13.28
Backlash	[arc-min]	--	0	0	0	0	0	0	0	0
Angular Transmission Accuracy	[arc-min]	--	≤ 1.5	≤ 1.5						
Angular Repeatability Accuracy	[arc-min]	--	± 0.15	± 0.15						
Surface Runout	[µm (max)]	--	20	20	20	20	20	20	20	20
Weight	[kg]	--	126	137	137	137	137	137	137	137
Maximum Axial Load	[N]	--	17170	17170	17170	17170	17170	17170	17170	17170
Maximum Radial Load	[N]	--	7283	7283	7283	7283	7283	7283	7283	7283
Maximum Tilting Moment Load	[Nm]	--	1216.3	1216.3	1216.3	1216.3	1216.3	1216.3	1216.3	1216.3
Efficiency	[%]	--	80	72	72	72	72	72	72	72
Protection Class	--	*4	IP54 (IP65)							

*1) At nominal input speed
*2) Speeds are at the actuator input. Limits when used with additional gearbox are higher
*3) At input shaft
*4) IP65 (wash-down) is available as an option. Contact NIDEC-SHIMPO for more details and our food grade options

STR-160E – 2-Stage and 3-Stage Specifications with EVB-115

Frame Size	**160E**									
Stage			**2-Stage**	**3-Stage**						
Ratio	Units	Notes	200	300	320	400	500	560	600	700
Nominal Torque	[Nm]	*1	1165	1165	1165	1165	1165	1165	1165	1165
Acceleration Torque	[Nm]	--	1888	1888	1888	1888	1888	1888	1888	1888
No Load Torque	[Nm]	*1	2.2	1.4	1.4	1.4	1.4	1.4	1.4	1.4
Nominal Input Speed	[rpm]	*2	3000	3000	3000	3000	3000	3000	3000	3000
Maximum Input Speed	[rpm]	*2	6000	6000	6000	6000	6000	6000	6000	6000
Reflected Inertia (Single)	[kg-m^{2}x10^{-4}]	*3	--	--	--	--	--	--	--	--
Reflected Inertia (≤Ø 14)	[kg-m^{2}x10^{-4}]	*3	--	2.367	2.577	2.317	2.297	2.517	1.987	2.277
Reflected Inertia (≤Ø 19)	[kg-m^{2}x10^{-4}]	*3	4.577	2.697	2.907	2.647	2.627	2.847	2.317	2.607
Reflected Inertia (≤Ø 28)	[kg-m^{2}x10^{-4}]	*3	6.167	4.817	5.027	4.767	4.757	4.977	4.447	4.737
Reflected Inertia (≤Ø 38)	[kg-m^{2}x10^{-4}]	*3	13.24	--	--	--	--	--	--	--
Backlash	[arc-min]	--	0	0	0	0	0	0	0	0
Angular Transmission Accuracy	[arc-min]	--	≤ 1.5	≤ 1.5						
Angular Repeatability Accuracy	[arc-min]	--	± 0.15	± 0.15						
Surface Runout	[µm (max)]	--	20	20	20	20	20	20	20	20
Weight	[kg]	--	137	136	136	136	136	136	136	136
Maximum Axial Load	[N]	--	17170	17170	17170	17170	17170	17170	17170	17170
Maximum Radial Load	[N]	--	7283	7283	7283	7283	7283	7283	7283	7283
Maximum Tilting Moment Load	[Nm]	--	1216.3	1216.3	1216.3	1216.3	1216.3	1216.3	1216.3	1216.3
Efficiency	[%]	--	72	68	68	68	68	68	68	68
Protection Class	--	*4	IP54 (IP65)							

*1) At nominal input speed
*2) Speeds are at the actuator input. Limits when used with additional gearbox are higher
*3) At input shaft
*4) IP65 (wash-down) is available as an option. Contact NIDEC-SHIMPO for more details and our food grade options

STR-160E – 3-Stage Specifications with EVB-115

Frame Size	160E									
Stage	**3-Stage**									
Ratio	Units	Notes	800	900	1000	1200	1400	1600	1800	2000
Nominal Torque	[Nm]	*1	1165	1165	1165	1165	1165	1165	1165	1165
Acceleration Torque	[Nm]	--	1888	1888	1888	1888	1888	1888	1888	1888
No Load Torque	[Nm]	*1	1.4	1.4	1.4	1.4	1.4	1.4	1.4	1.4
Nominal Input Speed	[rpm]	*2	3000	3000	3000	3000	3000	3000	3000	3000
Maximum Input Speed	[rpm]	*2	6000	6000	6000	6000	6000	6000	6000	6000
Reflected Inertia (Single)	[kg-m^{2}x10^{-4}]	*3	--	--	--	--	--	--	--	--
Reflected Inertia (≤Ø 14)	[kg-m^{2}x10^{-4}]	*3	1.977	2.267	1.977	1.967	1.967	1.967	1.967	1.967
Reflected Inertia (≤Ø 19)	[kg-m^{2}x10^{-4}]	*3	2.307	2.597	2.307	2.297	2.297	2.297	2.297	2.297
Reflected Inertia (≤Ø 28)	[kg-m^{2}x10^{-4}]	*3	4.437	4.727	4.427	4.427	4.427	4.427	4.427	4.427
Reflected Inertia (≤Ø 38)	[kg-m^{2}x10^{-4}]	*3	--	--	--	--	--	--	--	--
Backlash	[arc-min]	--	0	0	0	0	0	0	0	0
Angular Transmission Accuracy	[arc-min]	--	≤ 1.5							
Angular Repeatability Accuracy	[arc-min]	--	± 0.15							
Surface Runout	[µm (max)]	--	20	20	20	20	20	20	20	20
Weight	[kg]	--	136	136	136	136	136	136	136	136
Maximum Axial Load	[N]	--	17170	17170	17170	17170	17170	17170	17170	17170
Maximum Radial Load	[N]	--	7283	7283	7283	7283	7283	7283	7283	7283
Maximum Tilting Moment Load	[Nm]	--	1216.3	1216.3	1216.3	1216.3	1216.3	1216.3	1216.3	1216.3
Efficiency	[%]	--	68	68	68	68	68	68	68	68
Protection Class	--	*4	IP54 (IP65)							

*1) At nominal input speed
*2) Speeds are at the actuator input. Limits when used with additional gearbox are higher
*3) At input shaft
*4) IP65 (wash-down) is available as an option. Contact NIDEC-SHIMPO for more details and our food grade options

STR-160 Dimensions with EVB-115

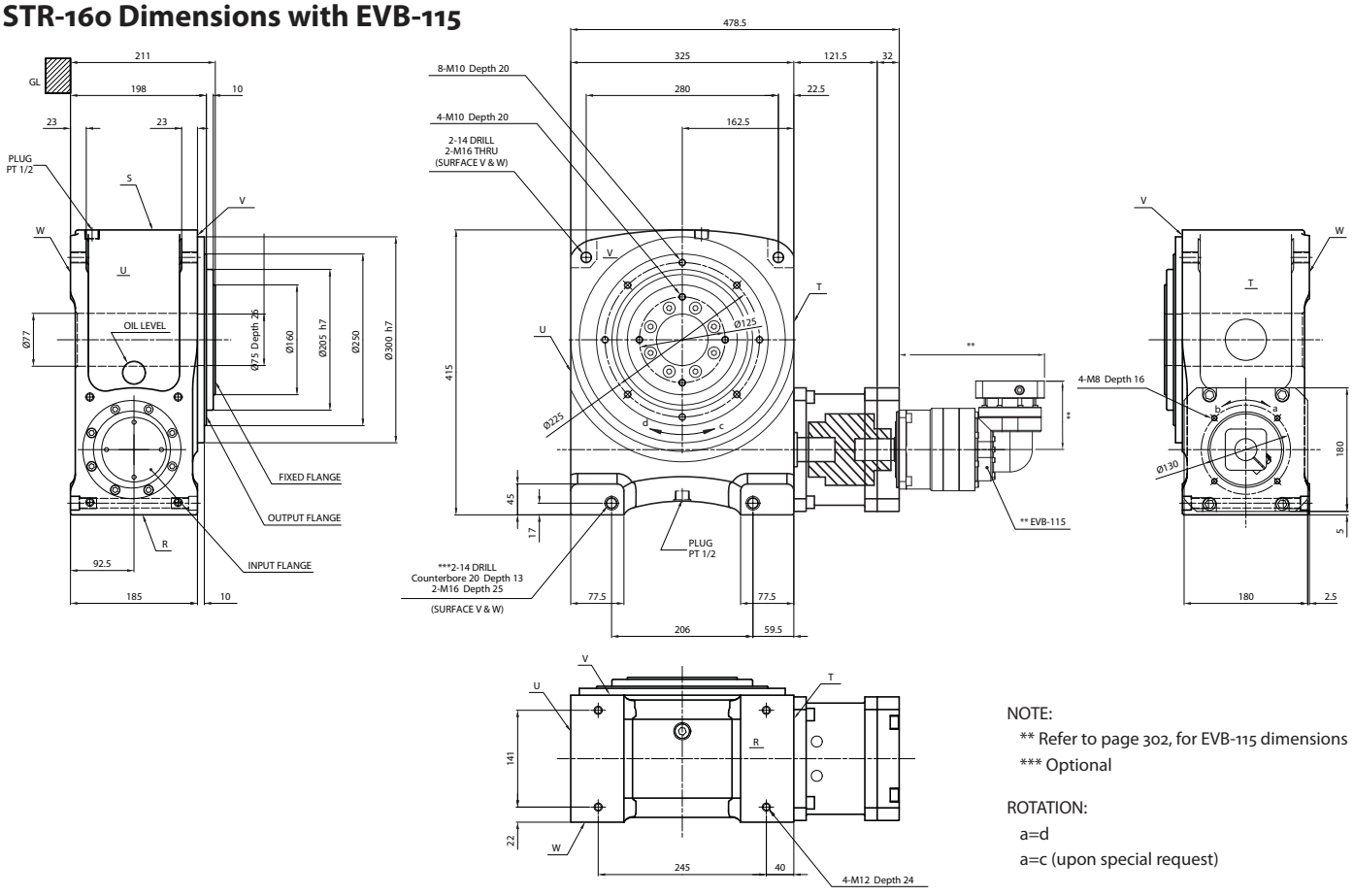

NOTE:
** Refer to page 302, for EVB-115 dimensions
*** Optional

ROTATION:
a=d
a=c (upon special request)

STR

STR-250V – 1-Stage and 2-Stage Specifications with VRB-180

Frame Size			**250V**							
Stage			**1-Stage**	**2-Stage**						
Ratio	Units	Notes	20	60	80	100	120	140	160	180
Nominal Torque	[Nm]	*1	4006	4006	4006	4006	4006	4006	4006	4006
Acceleration Torque	[Nm]	--	6072	6072	6072	6072	6072	6072	6072	6072
No Load Torque	[Nm]	*1	14.5	2.6	2.6	2.6	2.6	2.6	2.6	2.6
Nominal Input Speed	[rpm]	*2	400	1500	1500	1500	1500	1500	1500	1500
Maximum Input Speed	[rpm]	*2	800	3000	3000	3000	3000	3000	3000	3000
Reflected Inertia (Single)	[kg-m²x10⁻⁴]	*3	430.0	--	--	--	--	--	--	--
Reflected Inertia (≤Ø 28)	[kg-m²x10⁻⁴]	*3	--	--	--	--	--	--	--	--
Reflected Inertia (≤Ø 38)	[kg-m²x10⁻⁴]	*3	--	45.08	29.08	23.08	19.08	17.08	16.08	15.08
Reflected Inertia (≤Ø 48)	[kg-m²x10⁻⁴]	*3	--	67.08	51.08	45.08	42.08	39.08	38.08	37.08
Reflected Inertia (≤Ø 65)	[kg-m²x10⁻⁴]	*3	--	131.1	111.1	101.1	101.1	100.1	98.08	98.08
Backlash	[arc-min]	--	0	0	0	0	0	0	0	0
Angular Transmission Accuracy	[arc-min]	--	≤ 1.5	≤ 1.5						
Angular Repeatability Accuracy	[arc-min]	--	± 0.15	± 0.15						
Surface Runout	[µm (max)]	--	20	20	20	20	20	20	20	20
Weight	[kg]	--	383	419	419	419	419	419	419	419
Maximum Axial Load	[N]	--	38051	38051	38051	38051	38051	38051	38051	38051
Maximum Radial Load	[N]	--	11165	11165	11165	11165	11165	11165	11165	11165
Maximum Tilting Moment Load	[Nm]	--	2478.6	2478.6	2478.6	2478.6	2478.6	2478.6	2478.6	2478.6
Efficiency	[%]	--	80	76	76	76	76	76	76	76
Protection Class	--	*4	IP54 (IP65)							

*1) At nominal input speed
*2) Speeds are at the actuator input. Limits when used with additional gearbox are higher
*3) At input shaft
*4) IP65 (wash-down) is available as an option. Contact NIDEC-SHIMPO for more details and our food grade options

STR-250V – 2-Stage and 3-Stage Specifications with VRB-180

Frame Size			**250V**							
Stage			**2-Stage**	**3-Stage**						
Ratio	Units	Notes	200	300	320	400	500	560	600	700
Nominal Torque	[Nm]	*1	4006	4006	4006	4006	4006	4006	4006	4006
Acceleration Torque	[Nm]	--	6072	6072	6072	6072	6072	6072	6072	6072
No Load Torque	[Nm]	*1	2.6	2.0	2.0	2.0	2.0	2.0	2.0	2.0
Nominal Input Speed	[rpm]	*2	1500	1500	1500	1500	1500	1500	1500	1500
Maximum Input Speed	[rpm]	*2	3000	3000	3000	3000	3000	3000	3000	3000
Reflected Inertia (Single)	[kg-m²x10⁻⁴]	*3	--	--	--	--	--	--	--	--
Reflected Inertia (≤Ø 28)	[kg-m²x10⁻⁴]	*3	--	5.775	6.475	5.475	5.275	5.975	4.275	5.175
Reflected Inertia (≤Ø 38)	[kg-m²x10⁻⁴]	*3	15.08	13.08	14.08	13.08	13.08	14.08	12.08	13.08
Reflected Inertia (≤Ø 48)	[kg-m²x10⁻⁴]	*3	37.08	35.08	36.08	35.08	35.08	36.08	34.08	35.08
Reflected Inertia (≤Ø 65)	[kg-m²x10⁻⁴]	*3	97.08	--	--	--	--	--	--	--
Backlash	[arc-min]	--	0	0	0	0	0	0	0	0
Angular Transmission Accuracy	[arc-min]	--	≤ 1.5	≤ 1.5						
Angular Repeatability Accuracy	[arc-min]	--	± 0.15	± 0.15						
Surface Runout	[µm (max)]	--	20	20	20	20	20	20	20	20
Weight	[kg]	--	419	420	420	420	420	420	420	420
Maximum Axial Load	[N]	--	38051	38051	38051	38051	38051	38051	38051	38051
Maximum Radial Load	[N]	--	11165	11165	11165	11165	11165	11165	11165	11165
Maximum Tilting Moment Load	[Nm]	--	2478.6	2478.6	2478.6	2478.6	2478.6	2478.6	2478.6	2478.6
Efficiency	[%]	--	76	72	72	72	72	72	72	72
Protection Class	--	*4	IP54 (IP65)							

*1) At nominal input speed
*2) Speeds are at the actuator input. Limits when used with additional gearbox are higher
*3) At input shaft
*4) IP65 (wash-down) is available as an option. Contact NIDEC-SHIMPO for more details and our food grade options

STR-250V – 3-Stage Specifications with VRB-180

Frame Size	250V									
Stage	**3-Stage**									
Ratio	Units	Notes	800	900	1000	1200	1400	1600	1800	2000
Nominal Torque	[Nm]	*1	4006	4006	4006	4006	4006	4006	4006	4006
Acceleration Torque	[Nm]	--	6072	6072	6072	6072	6072	6072	6072	6072
No Load Torque	[Nm]	*1	2.0	2.0	2.0	2.0	2.0	2.0	2.0	2.0
Nominal Input Speed	[rpm]	*2	1500	1500	1500	1500	1500	1500	1500	1500
Maximum Input Speed	[rpm]	*2	3000	3000	3000	3000	3000	3000	3000	3000
Reflected Inertia (Single)	[kg-m^{2}x10^{-4}]	*3	--	--	--	--	--	--	--	--
Reflected Inertia (≤Ø 28)	[kg-m^{2}x10^{-4}]	*3	4.275	5.075	4.175	4.175	4.175	4.175	4.175	4.175
Reflected Inertia (≤Ø 38)	[kg-m^{2}x10^{-4}]	*3	12.08	13.08	12.08	12.08	12.08	12.08	12.08	12.08
Reflected Inertia (≤Ø 48)	[kg-m^{2}x10^{-4}]	*3	34.08	35.08	34.08	34.08	34.08	34.08	34.08	34.08
Reflected Inertia (≤Ø 65)	[kg-m^{2}x10^{-4}]	*3	--	--	--	--	--	--	--	--
Backlash	[arc-min]	--	0	0	0	0	0	0	0	0
Angular Transmission Accuracy	[arc-min]	--	≤ 1.5							
Angular Repeatability Accuracy	[arc-min]	--	± 0.15							
Surface Runout	[µm (max)]	--	20	20	20	20	20	20	20	20
Weight	[kg]	--	420	420	420	420	420	420	420	420
Maximum Axial Load	[N]	--	38051	38051	38051	38051	38051	38051	38051	38051
Maximum Radial Load	[N]	--	11165	11165	11165	11165	11165	11165	11165	11165
Maximum Tilting Moment Load	[Nm]	--	2478.6	2478.6	2478.6	2478.6	2478.6	2478.6	2478.6	2478.6
Efficiency	[%]	--	72	72	72	72	72	72	72	72
Protection Class	--	*4	IP54 (IP65)							

*1) At nominal input speed
*2) Speeds are at the actuator input. Limits when used with additional gearbox are higher
*3) At input shaft
*4) IP65 (wash-down) is available as an option. Contact NIDEC-SHIMPO for more details and our food grade options

STR-250 Dimensions with VRB-180

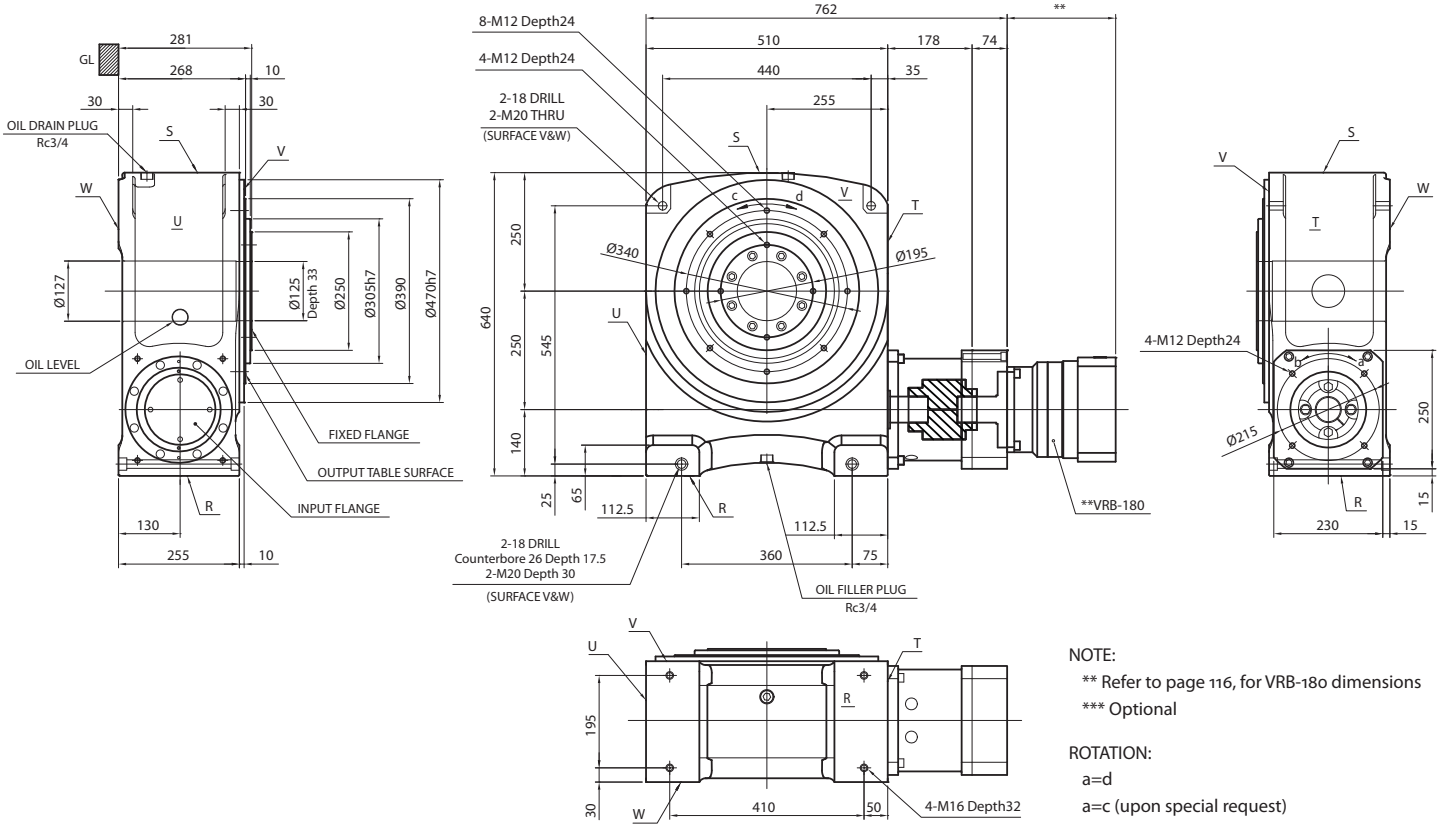

NOTE:
** Refer to page 116, for VRB-180 dimensions
*** Optional

ROTATION:
a=d
a=c (upon special request)

STR

STR-250E – 1-Stage and 2-Stage Specifications with EVB-180

Frame Size			**250E**							
Stage			**1-Stage**	**2-Stage**						
Ratio	Units	Notes	20	60	80	100	120	140	160	180
Nominal Torque	[Nm]	*1	4006	4006	4006	4006	4006	4006	4006	4006
Acceleration Torque	[Nm]	--	6072	6072	6072	6072	6072	6072	6072	6072
No Load Torque	[Nm]	*1	14.5	11.5	11.5	11.5	11.5	11.5	11.5	11.5
Nominal Input Speed	[rpm]	*2	400	1500	1500	1500	1500	1500	1500	1500
Maximum Input Speed	[rpm]	*2	800	3000	3000	3000	3000	3000	3000	3000
Reflected Inertia (Single)	[kg-m²x10⁻⁴]	*3	430.041	--	--	--	--	--	--	--
Reflected Inertia (≤Ø 14)	[kg-m²x10⁻⁴]	*3	--	--	--	--	--	--	--	--
Reflected Inertia (≤Ø 19)	[kg-m²x10⁻⁴]	*3	--	94.785	78.795	72.965	69.815	67.505	66.345	65.675
Reflected Inertia (≤Ø 28)	[kg-m²x10⁻⁴]	*3	--	129.675	113.675	107.875	104.675	102.375	101.175	100.535
Reflected Inertia (≤Ø 38)	[kg-m²x10⁻⁴]	*3	--	215.275	199.275	193.475	190.275	187.975	186.775	186.175
Backlash	[arc-min]	--	0	0	0	0	0	0	0	0
Angular Transmission Accuracy	[arc-min]	--	≤ 1.5	≤ 1.5						
Angular Repeatability Accuracy	[arc-min]	--	± 0.15	± 0.15						
Surface Runout	[µm (max)]	--	20	20	20	20	20	20	20	20
Weight	[kg]	--	383	432	432	432	432	432	432	432
Maximum Axial Load	[N]	--	38051	38051	38051	38051	38051	38051	38051	38051
Maximum Radial Load	[N]	--	11165	11165	11165	11165	11165	11165	11165	11165
Maximum Tilting Moment Load	[Nm]	--	2478.6	2478.6	2478.6	2478.6	2478.6	2478.6	2478.6	2478.6
Efficiency	[%]	--	80	72	72	72	72	72	72	72
Protection Class	--	*4	IP54 (IP65)							

*1) At nominal input speed
*2) Speeds are at the actuator input. Limits when used with additional gearbox are higher
*3) At input shaft
*4) IP65 (wash-down) is available as an option. Contact NIDEC-SHIMPO for more details and our food grade options

STR-250E – 2-Stage and 3-Stage Specifications with EVB-180

Frame Size			**250E**							
Stage			**2-Stage**	**3-Stage**						
Ratio	Units	Notes	200	300	320	400	500	560	600	700
Nominal Torque	[Nm]	*1	4006	4006	4006	4006	4006	4006	4006	4006
Acceleration Torque	[Nm]	--	6072	6072	6072	6072	6072	6072	6072	6072
No Load Torque	[Nm]	*1	11.5	5.4	5.4	5.4	5.4	5.4	5.4	5.4
Nominal Input Speed	[rpm]	*2	1500	1500	1500	1500	1500	1500	1500	1500
Maximum Input Speed	[rpm]	*2	3000	3000	3000	3000	3000	3000	3000	3000
Reflected Inertia (Single)	[kg-m²x10⁻⁴]	*3	--	--	--	--	--	--	--	--
Reflected Inertia (≤Ø 14)	[kg-m²x10⁻⁴]	*3	--	12.565	13.165	12.225	12.055	12.665	11.405	11.905
Reflected Inertia (≤Ø 19)	[kg-m²x10⁻⁴]	*3	65.355	21.355	21.955	21.015	20.845	21.455	20.185	20.695
Reflected Inertia (≤Ø 28)	[kg-m²x10⁻⁴]	*3	100.215	26.175	26.775	25.835	25.665	26.275	25.015	25.515
Reflected Inertia (≤Ø 38)	[kg-m²x10⁻⁴]	*3	185.775	--	--	--	--	--	--	--
Backlash	[arc-min]	--	0	0	0	0	0	0	0	0
Angular Transmission Accuracy	[arc-min]	--	≤ 1.5	≤ 1.5						
Angular Repeatability Accuracy	[arc-min]	--	± 0.15	± 0.15						
Surface Runout	[µm (max)]	--	20	20	20	20	20	20	20	20
Weight	[kg]	--	432	419	419	419	419	419	419	419
Maximum Axial Load	[N]	--	38051	38051	38051	38051	38051	38051	38051	38051
Maximum Radial Load	[N]	--	11165	11165	11165	11165	11165	11165	11165	11165
Maximum Tilting Moment Load	[Nm]	--	2478.6	2478.6	2478.6	2478.6	2478.6	2478.6	2478.6	2478.6
Efficiency	[%]	--	72	68	68	68	68	68	68	68
Protection Class	--	*4	IP54 (IP65)							

*1) At nominal input speed
*2) Speeds are at the actuator input. Limits when used with additional gearbox are higher
*3) At input shaft
*4) IP65 (wash-down) is available as an option. Contact NIDEC-SHIMPO for more details and our food grade options

STR-250E – 3-Stage Specifications with EVB-180

Frame Size	250E									
Stage	**3-Stage**									
Ratio	Units	Notes	800	900	1000	1200	1400	1600	1800	2000
Nominal Torque	[Nm]	*1	4006	4006	4006	4006	4006	4006	4006	4006
Acceleration Torque	[Nm]	--	6072	6072	6072	6072	6072	6072	6072	6072
No Load Torque	[Nm]	*1	5.4	5.4	5.4	5.4	5.4	5.4	5.4	5.4
Nominal Input Speed	[rpm]	*2	1500	1500	1500	1500	1500	1500	1500	1500
Maximum Input Speed	[rpm]	*2	3000	3000	3000	3000	3000	3000	3000	3000
Reflected Inertia (Single)	[kg-m^{2}x10^{-4}]	*3	--	--	--	--	--	--	--	--
Reflected Inertia (≤Ø 14)	[kg-m^{2}x10^{-4}]	*3	11.315	11.835	11.275	11.255	11.235	11.225	11.225	11.215
Reflected Inertia (≤Ø 19)	[kg-m^{2}x10^{-4}]	*3	20.105	20.625	20.065	20.035	20.025	20.015	20.005	20.005
Reflected Inertia (≤Ø 28)	[kg-m^{2}x10^{-4}]	*3	24.925	25.445	24.885	24.855	24.845	24.835	24.825	24.825
Reflected Inertia (≤Ø 38)	[kg-m^{2}x10^{-4}]	*3	--	--	--	--	--	--	--	--
Backlash	[arc-min]	--	0	0	0	0	0	0	0	0
Angular Transmission Accuracy	[arc-min]	--	≤ 1.5							
Angular Repeatability Accuracy	[arc-min]	--	± 0.15							
Surface Runout	[µm (max)]	--	20	20	20	20	20	20	20	20
Weight	[kg]	--	419	419	419	419	419	419	419	419
Maximum Axial Load	[N]	--	38051	38051	38051	38051	38051	38051	38051	38051
Maximum Radial Load	[N]	--	11165	11165	11165	11165	11165	11165	11165	11165
Maximum Tilting Moment Load	[Nm]	--	2478.6	2478.6	2478.6	2478.6	2478.6	2478.6	2478.6	2478.6
Efficiency	[%]	--	68	68	68	68	68	68	68	68
Protection Class	--	*4	IP54 (IP65)							

*1) At nominal input speed
*2) Speeds are at the actuator input. Limits when used with additional gearbox are higher
*3) At input shaft
*4) IP65 (wash-down) is available as an option. Contact NIDEC-SHIMPO for more details and our food grade options

STR-250 Dimensions with EVB-180

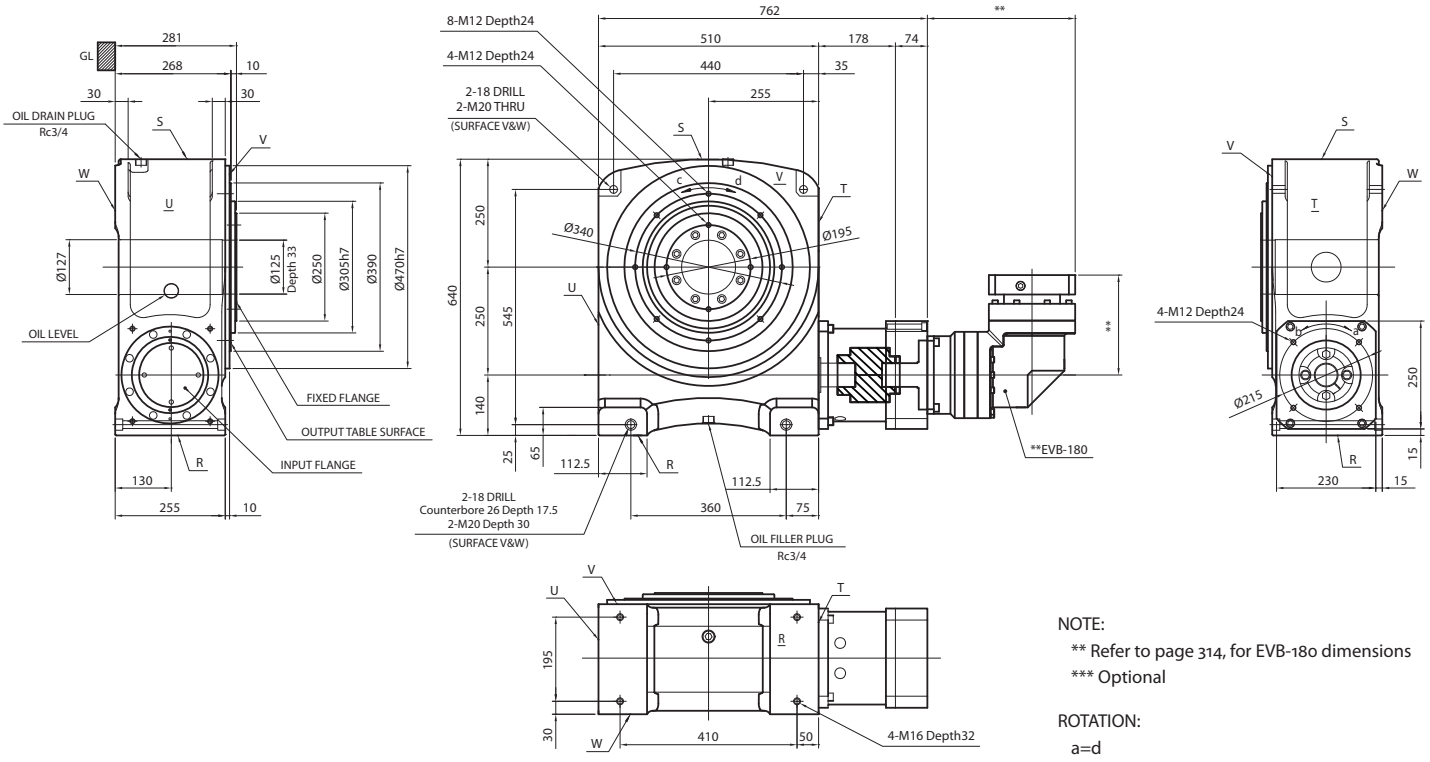

NOTE:
** Refer to page 314, for EVB-180 dimensions
*** Optional

ROTATION:
a=d
a=c (upon special request)

STR

ER-SERIES

High reduction ratios, without sacrificing efficiency. Compact designs, without requiring special motors. Exceptional shock load capacity, without having to oversize. Greater overhung load capacities, without using expensive special components. The (Servo ER) Circulute is ideal for those applications in heavier industrial environments where a more robust cycloidal gearbox is necessary.

The dual pin-housing of the cycloidal provides the ability to preload one wheel against the other reducing the output shaft backlash to less than 6 arc-min. The long output shaft bearing span provides exceptional overhung load capabilities. At 3,000 rpm input the (Servo ER) Circulute can handle motors up to 12 kW and single reduction ratios ranging from 11:1 to 71:1.

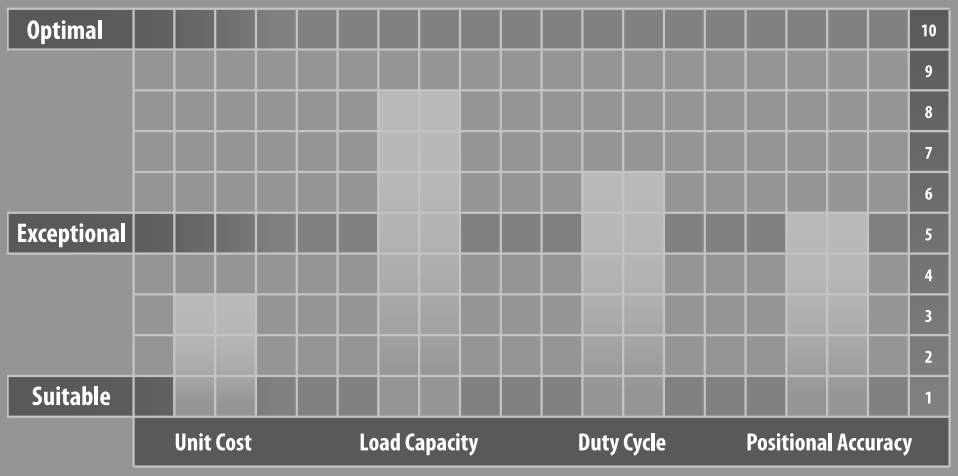

ER-SERIES

- High efficiency cycloidal reducer design
- Multiple inputs: NEMA C-Face, Servo Square Flange, Shaft Input, Shovel Base, Top Mount
- Straddle mount output shaft bearings (sizes D, E, F)
- Multiple mounting options: Base, flange, ring
- Readily available
- Assembled in the USA

ER-Series – Features

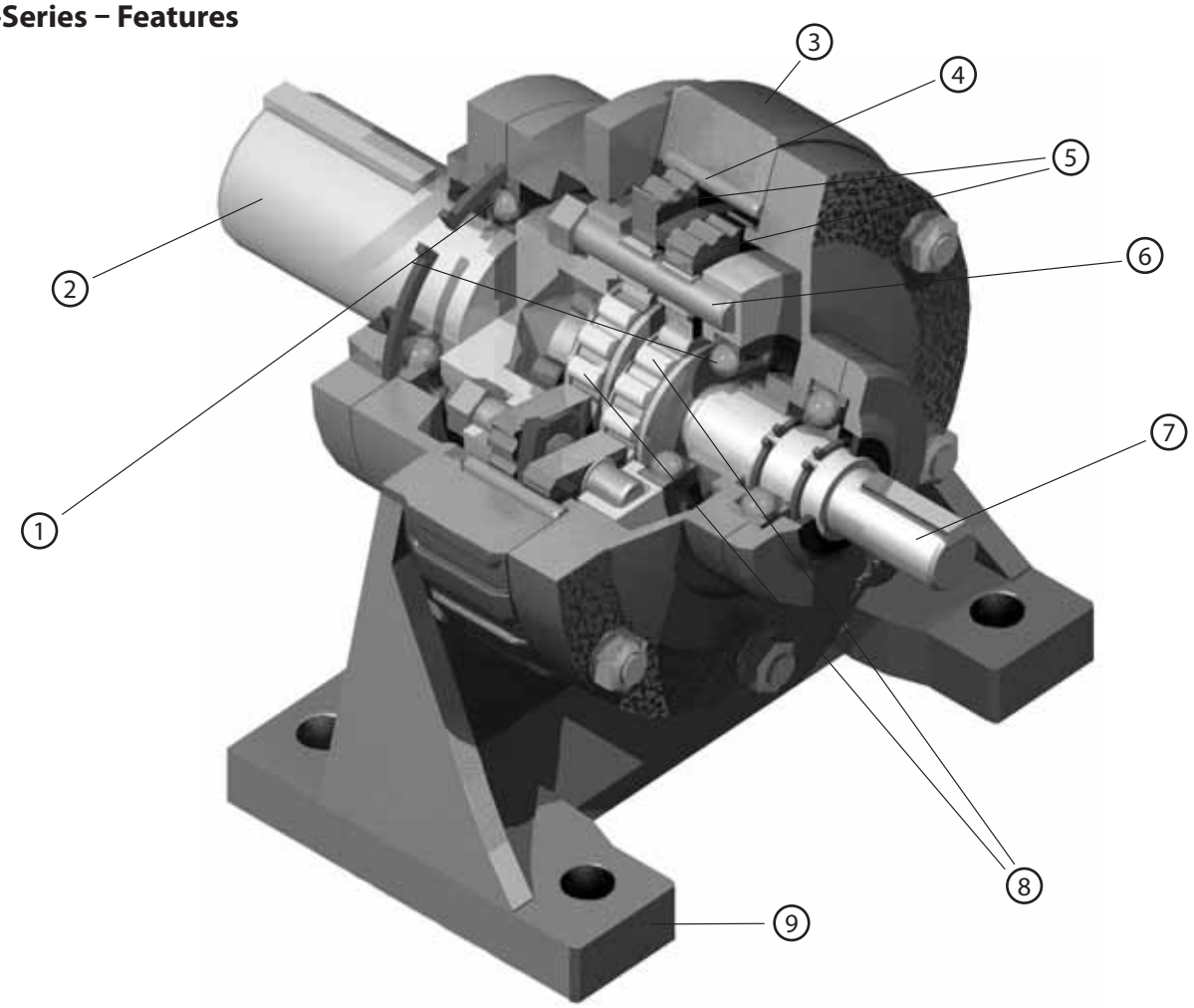

1. Output shaft bearings
2. Output shaft
3. Internal pin housing
4. Internal pin
5. Wheels
6. Carrier pins
7. Input shaft
8. Eccentric roller bearings
9. Various mounting options

ER-Series – Model Code

B	0	7	–	–	1	7	S	0	0	9	0	1	6	A	B	H	–	–

- Modifications (Use dashes for any place not used - list modifications in alphabetical order using position one first)
- Mounting Type Position
- Quill Shaft Tolerance (Specified by Shimpo)
- Quill Shaft Diameter
- Servo Motor Bolt Circle Diameter (mm)
- Backlash
- Servo Motor Input
- Reduction Ratio (From the selection tables use dashes if all four places are not used)
- Frame size (From the selection tables)

(See Dimensional Table)

Backlash

*1) Standard Backlash: Approximately 60 arc-min - 0

*2) Precision Backlash: Less than 6 arc-min - P

Contact us for additional information or refer to our online reducer selection tool.

Selection tool www.nidec-shimpo.co.jp/selection/eng

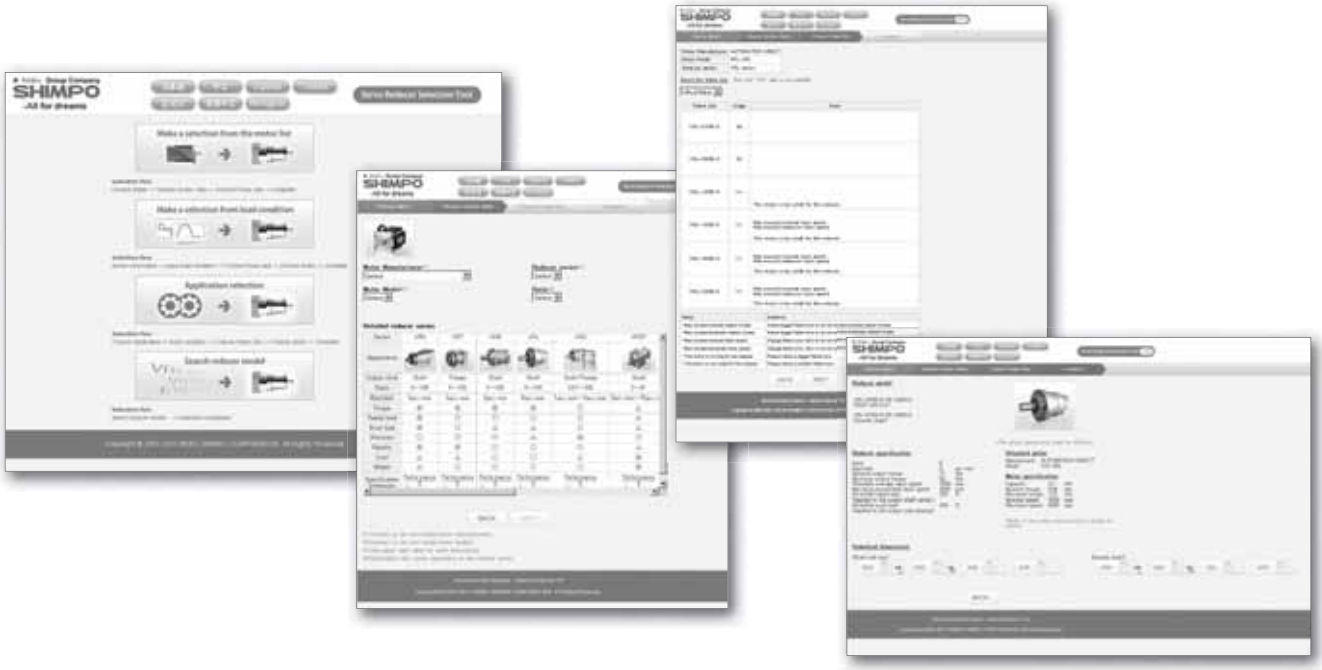

Rating Table - 3000 rpm Input, Single Reduction, Precision Backlash (less than 6 arc-min)

Frame Size	Ratio	Units	Notes	11	17	29	35	47	59	71
B03	Input	[kW]	--	1.430	1.160	0.710	0.560	0.390	0.320	0.250
	Nominal Output Torque	[Nm]	*1	45.000	56.300	59.200	56.600	52.800	54.000	51.400
	Emergency Stopping Torque	[Nm]	*2	112	141	148	141	132	135	128
	Torsional Rigidity	[Nm/arc-min]	--	3.000	4.700	5.000	5.400	5.400	5.400	5.400
	Moment of Inertia	[kg-cm^2]	--	0.716	0.969	0.927	0.927	0.927	0.927	0.927
B07	Input	[kW]	--	1.900	1.540	0.950	0.750	0.520	0.430	0.340
	Nominal Output Torque	[Nm]	*1	60.000	75.000	78.900	75.400	78.200	79.900	76.100
	Emergency Stopping Torque	[Nm]	*2	150	188	197	189	196	200	190
	Torsional Rigidity	[Nm/arc-min]	--	3.000	4.700	5.000	5.400	5.400	5.400	5.400
	Moment of Inertia	[kg-cm^2]	--	0.716	0.969	0.927	0.927	0.927	0.927	0.927
C03	Input	[kW]	--	2.910	2.690	1.690	1.550	1.080	0.860	0.710
	Nominal Output Torque	[Nm]	*1	91.700	131	140	155	145	145	144
	Emergency Stopping Torque	[Nm]	*2	229	328	350	388	362	362	361
	Torsional Rigidity	[Nm/arc-min]	--	6.200	11.200	11.900	12.600	12.600	12.600	12.600
	Moment of Inertia	[kg-cm^2]	--	3.118	3.412	4.171	4.129	4.086	4.086	4.086
C07	Input	[kW]	--	3.880	3.590	2.250	2.060	1.430	1.140	0.950
	Nominal Output Torque	[Nm]	*1	122	175	187	207	214	214	214
	Emergency Stopping Torque	[Nm]	*2	306	437	467	517	536	536	535
	Torsional Rigidity	[Nm/arc-min]	--	6.200	11.200	11.900	12.600	12.600	12.600	12.600
	Moment of Inertia	[kg-cm^2]	--	3.118	3.412	4.171	4.129	4.086	4.086	4.086
D03	Input	[kW]	--	6.830	5.380	3.400	3.010	2.240	1.720	1.360
	Nominal Output Torque	[Nm]	*1	215	262	282	302	302	290	277
	Emergency Stopping Torque	[Nm]	*2	538	654	705	754	754	725	693
	Torsional Rigidity	[Nm/arc-min]	--	17.800	23.000	25.200	27.400	27.400	27.400	27.400
	Moment of Inertia	[kg-cm^2]	--	7.752	10.996	12.007	11.754	11.754	11.754	11.501
D07	Input	[kW]	--	9.110	7.170	4.530	4.010	2.990	2.290	1.820
	Nominal Output Torque	[Nm]	*1	287	349	376	402	447	430	411
	Emergency Stopping Torque	[Nm]	*2	718	872	940	1,010	1,120	1,070	1,030
	Torsional Rigidity	[Nm/arc-min]	--	17.800	23.000	25.200	27.400	27.400	27.400	27.400
	Moment of Inertia	[kg-cm^2]	--	7.752	10.996	12.007	11.754	11.754	11.754	11.501

*1) The reducer can continuously sustain this torque value without overheating

*2) The reducer can sustain this torque value for 1000 cycles without failure

*3) Acceleration torque is 1.5 times the nominal output torque

Rating Table - 2000 rpm Input, Single Reduction, Precision Backlash (less than 6 arc-min)

Frame Size	Ratio	Units	Notes	11	17	29	35	47	59	71
E03	Input	[kW]	--	13.100	11.600	9.710	8.050	5.390	4.430	3.420
	Nominal Output Torque	[Nm]	*1	618	849	1,210	1,210	1,090	1,120	1,040
	Emergency Stopping Torque	[Nm]	*2	1,540	2,120	3,030	3,030	2,730	2,800	2,600
	Torsional Rigidity	[Nm/arc-min]	--	54.800	70.400	85.200	85.200	85.200	85.200	85.200
	Moment of Inertia	[kg-cm^2]	--	31.512	52.661	49.291	48.869	48.448	48.448	48.027
E07	Input	[kW]	--	17.400	15.500	13.000	10.700	7.190	5.910	4.570
	Nominal Output Torque	[Nm]	*1	824	1,130	1,610	1,610	1,450	1,500	1,390
	Emergency Stopping Torque	[Nm]	*2	2,060	2,660	3,520	3,520	3,520	3,520	3,480
	Torsional Rigidity	[Nm/arc-min]	--	54.800	70.400	85.200	85.200	85.200	85.200	85.200
	Moment of Inertia	[kg-cm^2]	--	31.512	52.661	49.291	48.869	48.448	48.448	48.027
F03	Input	[kW]	--	20.200	19.900	17.000	14.800	10.800	8.170	6.790
	Nominal Output Torque	[Nm]	*1	953	1,450	2,120	2,230	2,180	2,070	2,070
	Emergency Stopping Torque	[Nm]	*2	2,380	3,630	5,300	5,580	5,450	5,180	5,180
	Torsional Rigidity	[Nm/arc-min]	--	116.700	122.300	133.400	133.400	133.400	133.400	133.400
	Moment of Inertia	[kg-cm^2]	--	87.628	74.989	130.178	127.650	127.650	127.650	125.122
F07	Input	[kW]	--	26.900	26.500	22.600	19.800	14.400	10.900	9.060
	Nominal Output Torque	[Nm]	*1	1,270	1,940	2,820	2,970	2,900	2,760	2,760
	Emergency Stopping Torque	[Nm]	*2	3,180	4,850	7,050	7,350	7,350	6,900	6,900
	Torsional Rigidity	[Nm/arc-min]	--	116.700	122.300	133.400	133.400	133.400	133.400	133.400
	Moment of Inertia	[kg-cm^2]	--	87.628	74.989	130.178	127.650	127.650	127.650	125.122

*1) The reducer can continuously sustain this torque value without overheating

*2) The reducer can sustain this torque value for 1000 cycles without failure

*3) Acceleration torque is 1.5 times the nominal output torque

ER Common Dimensions – Single Stage Base Mount

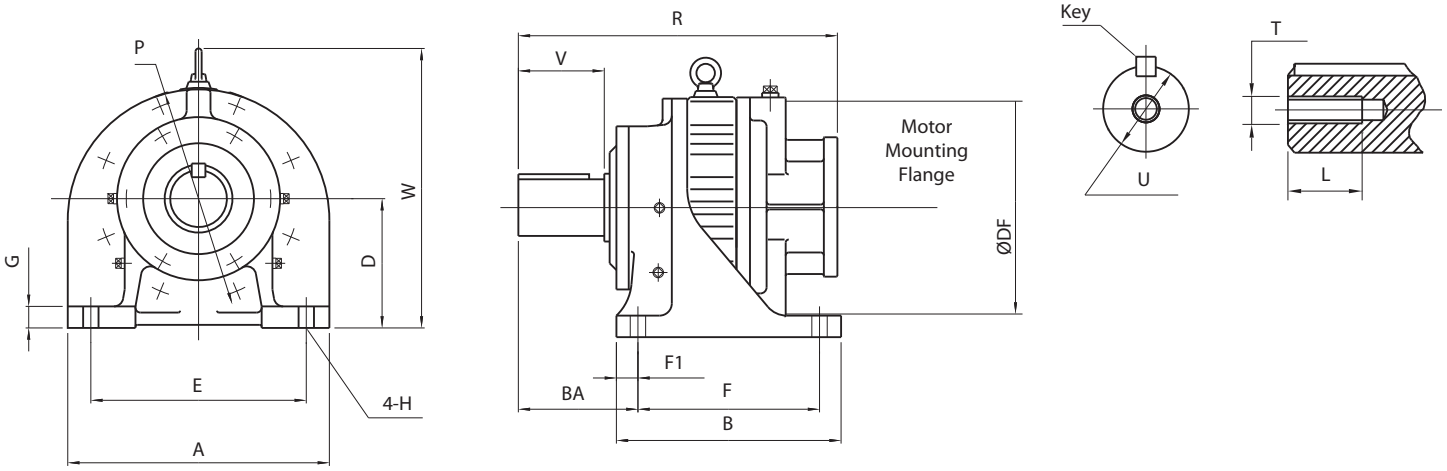

Frame Size	Units	A	B	BA	D	DF	E	F	F1	G	H	P
A03 - A07	[mm]	175.01	119.89	65.28	89.99	N/A	145.03	89.92	14.99	16.00	11.94	147.07
A190 - A195	[mm]	180.09	134.87	59.94	100.00	N/A	150.11	89.92	14.99	11.94	10.92	147.07
B01 - B07	[mm]	175.01	150.11	85.85	115.01	N/A	145.03	119.89	14.99	16.00	11.94	150.11
B195 - B105	[mm]	180.09	134.87	59.94	100.00	N/A	150.11	89.92	14.99	11.94	10.92	150.11
B20H	[mm]	180.09	134.87	59.94	119.99	N/A	150.11	89.92	14.99	11.94	10.92	150.11
C01 - C07	[mm]	219.96	189.99	103.38	140.00	N/A	180.09	150.11	20.07	22.10	14.99	189.99
C110 - C115	[mm]	230.12	154.94	82.04	119.99	N/A	189.99	115.06	20.07	14.99	13.97	189.99
C225	[mm]	230.12	154.94	82.04	140.00	N/A	189.99	115.06	20.07	14.99	13.97	189.99
D01 - D07	[mm]	275.08	230.12	135.38	165.00	N/A	225.04	180.09	24.89	25.91	19.05	234.95
D135	[mm]	330.20	195.07	100.08	149.99	N/A	290.07	145.03	24.89	22.10	18.03	234.95
D145	[mm]	330.20	195.07	119.89	149.99	N/A	290.07	145.03	24.89	22.10	18.03	234.95
D225	[mm]	330.20	195.07	119.89	159.99	N/A	290.07	145.03	24.89	22.10	18.03	233.68
E01 - E07	[mm]	359.92	299.97	150.88	184.99	312.93	299.97	249.94	24.89	29.97	22.10	299.97
E165	[mm]	409.96	238.00	138.94	159.99	312.93	369.82	150.11	43.94	24.89	18.03	299.97
E370 - E375	[mm]	430.02	335.03	124.97	200.00	312.93	379.98	275.08	29.97	29.97	22.10	414.02
F03 - F07	[mm]	424.94	365.00	194.82	210.01	368.05	350.01	294.89	35.05	35.05	24.89	359.92

*1) Sizes A through B do not have a lifting eye

ER Flange Dimensions – Single Stage Base Mount

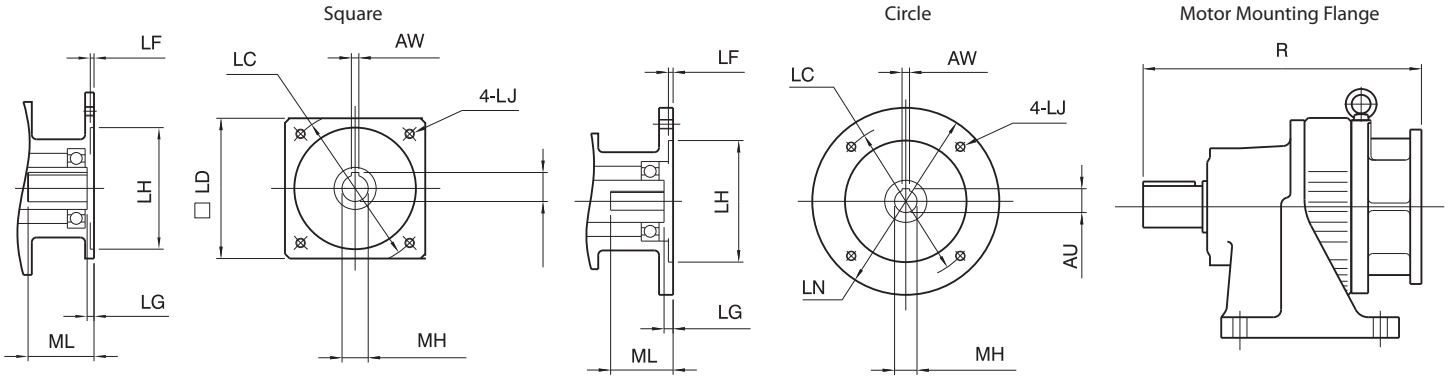

Frame Size	LC	LD	LF	LG	LH	LN	LJ	MH	ML	R	Net Weight (kg)
A03 - A07	70	--	5	5	50	120	M5	14, 16	37	202.692	9.98
	90	--	5	7	70	120	M6	16, 19	57	212.60	9.98
	100	--	7	7	80	120	M6	16, 19	--	214.63	9.98
	115	100	7	7	95	--	M6	19, 24	57	212.60	9.98
	145	110	7	8	110	--	M8	22, 24	--	212.60	12.70
B03 - B07	70	--	5	5	50	120	M5	14, 16	37	238.00	16.33
	90	--	5	7	70	120	M6	16, 19	57	247.90	16.33
	100	--	7	7	80	120	M6	16, 19	--	249.94	16.33
	115	100	7	7	95	--	M6	19, 24	57	247.90	16.33
	145	110	7	8	110	--	M8	22, 24	--	247.90	17.23
C03 - C07	90	--	7	7	70	160	M6	16	--	293.88	30.84
	100	--	7	7	80	120	M6	16, 19	--	300.99	30.84
	115	130	7	7	95	--	M6	22, 24	--	293.88	30.84
	145	130	7	8	110	--	M8	24, 28	--	293.88	30.84
	200	176	7	7	114.3	--	M12	28, 35	--	328.93	38.55
D03 - D07	115	--	7	7	95	200	M6	22, 24	--	354.08	52.15
	145	130	8	8	110	--	M8	22, 24	--	349.00	52.15
	165	--	8	8	130	200	M10	24, 28	--	360.93	52.15
	200	176	10	7	114.3	--	M12	28, 35	--	378.97	56.69
	215	--	10	10	180	300	M12	35, 38	--	399.03	61.22
E03 - E07	145	--	10	7	110	250	M8	24, 28	--	409.96	111.56
	165	176	7	7	130	--	M12	24, 28	--	399.03	101.59
	200	176	7	6	114.3	--	M12	28, 35	--	399.03	101.59
	215	--	10	11	180	300	M12	35, 38	--	459.99	116.55
	235	--	8	11	200	350	M12	38, 42	--	494.03	129.71
F03 - F07	200	--	10	7	114.3	300	M12	28, 35	--	546.10	207.71
	215	--	10	8	180	300	M12	35, 38	--	546.10	207.71
	235	--	5	11	200	300	M12	38, 42	--	546.10	207.71
	265	--	5	11	230	400	M12	42, 48	--	564.90	219.50

MH	AU	AW	ML
14	16	5	32
16	18	5	37
19	21.5	6	42
22	25	8	57
24	27	8	67

MH	AU	AW	ML
28	31	8	67
35	38	10	67
38	41	10	88
42	45	12	118
48	51.5	14	118

*1) Other servo flanges and bore sizes are available. Contact Shimpo Drives Customer Service for additional information

*2) All dimensions are in mm, except for «R» dimension, which is in inches

*3) To download CAD drawings, visit our website: www.shimpodrives.com

*4) The "R" dimension is the length from input flange face to output shaft end

ER Common Dimensions – Single Stage Flange Mount

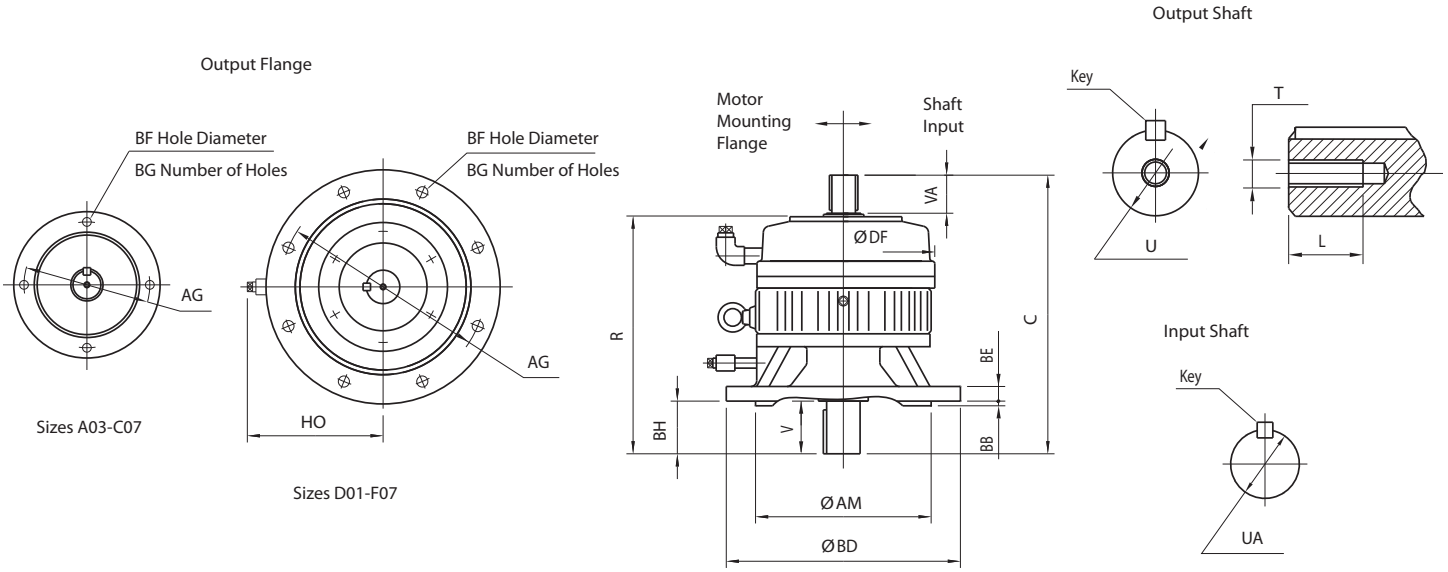

Frame Size	Units	AG	AM	BB	BD	BE	BF	BG	BH	HO
A03 - A07	[mm]	130.05	110.01	4.06	160.02	13.97	11.94	101.60	29.97	N/A
B01 - B07	[mm]	165.10	130.00	4.06	199.90	13.97	11.94	101.60	40.13	N/A
C01 - C07	[mm]	214.88	180.01	4.06	249.94	18.03	14.99	101.60	55.12	N/A
D01 - D07	[mm]	264.92	230.00	5.08	299.97	22.10	14.99	203.20	70.10	184.91
E01 - E07	[mm]	350.01	300.00	7.87	400.05	24.89	19.05	203.20	89.92	230.12
F03 - F07	[mm]	400.05	350.01	7.87	450.09	24.89	19.05	203.20	109.98	260.10

Frame Size	Units	Output Shaft				
		U	V	Key	T	L
A03 - A07	[mm]	22.23	30.23	4.78x4.78x24.89	N/A	N/A
B01 - B07	[mm]	34.925	50.80	7.95x7.95x44.96	N/A	N/A
C01 - C07	[mm]	44.450	63.50	9.53x9.53x54.86	N/A	N/A
D01 - D07	[mm]	63.500	95.25	15.88x15.88x74.93	M10 x 1.5	18.03
E01 - E07	[mm]	73.025	111.00	19.05x19.05x95.00	M20 x 2.5	35.05
F03 - F07	[mm]	92.075	139.70	22.23x22.23x115.06	M20 x 2.5	35.05

ER Flange Dimensions – Single Stage Flange Mount

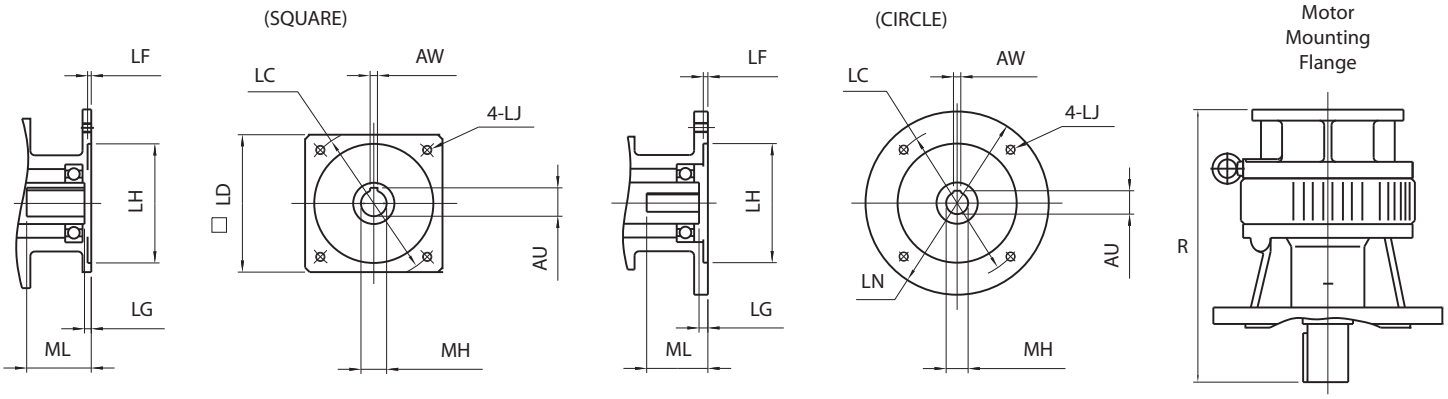

Frame Size	LC	LD	LF	LG	LH	LN	LJ	MH	ML	R	Net Weight (kg)
A03 - A07	70	--	5	5	50	120	M5	14, 16	37	202.69	9.98
	90	--	5	7	70	120	M6	16, 19	57	212.60	9.98
	100	--	7	7	80	120	M6	16, 19	--	214.63	9.98
	115	100	7	7	95	--	M6	19, 24	57	212.60	9.98
	145	110	7	8	110	--	M8	22, 24	--	212.60	12.70
B03 - B07	70	--	5	5	50	120	M5	14,16	37	238.00	16.33
	90	--	5	7	70	120	M6	16, 19	57	247.90	16.33
	100	--	7	7	80	120	M6	16, 19	--	249.94	16.33
	115	100	7	7	95	--	M6	19, 24	57	247.90	16.33
	145	110	7	8	110	--	M8	22, 24	--	247.90	17.23
C03 - C07	90	--	7	7	70	160	M6	16	--	293.88	30.84
	100	--	7	7	80	120	M6	16, 19	--	300.99	30.84
	115	130	7	7	95	--	M6	22, 24	--	293.88	30.84
	145	130	7	8	110	--	M8	24, 28	--	293.88	30.84
	200	176	7	7	114.3	--	M12	28, 35	--	328.93	38.55
D03 - D07	115	--	7	7	95	200	M6	22, 24	--	354.08	52.15
	145	130	8	8	110	--	M8	22, 24	--	349.00	52.15
	165	--	8	8	130	200	M10	24, 28	--	360.93	52.15
	200	176	10	7	114.3	--	M12	28, 35	--	378.97	56.69
	215	--	10	10	180	300	M12	35, 38	--	399.03	61.22
E03 - E07	145	--	10	7	110	250	M8	24, 28	--	409.96	111.56
	165	176	7	7	130	--	M12	24, 28	--	399.03	101.59
	200	176	7	6	114.3	--	M12	28, 35	--	399.03	101.59
	215	--	10	11	180	300	M12	35, 38	--	459.99	116.55
	235	--	8	11	200	350	M12	38, 42	--	494.03	129.71
F03 - F07	200	--	10	7	114.3	300	M12	28, 35	--	546.10	207.71
	215	--	10	8	180	300	M12	35, 38	--	546.10	207.71
	235	--	5	11	200	300	M12	38, 42	--	546.10	207.71
	265	--	5	11	230	400	M12	42, 48	--	564.90	219.50

MH	AU	AW	ML
14	16	5	32
16	18	5	37
19	21.5	6	42
22	25	8	57
24	27	8	67

MH	AU	AW	ML
28	31	8	67
35	38	10	67
38	41	10	88
42	45	12	118
48	51.5	14	118

*1) Other servo flanges and bore sizes are available. Contact Shimpo Drives Customer Service for additional information

*2) All dimensions are in mm, except for «R» dimension, which is in inches

*3) To download CAD drawings, visit our website: www.shimpodrives.com

Technical Information

Installation Instructions 420

Safety Precautions 421

Adapter Flange Codes 422-425

Selection Flow Charts 426-427

Online Sizing and Selection Tool 428-429

Mounting Procedure to Motor

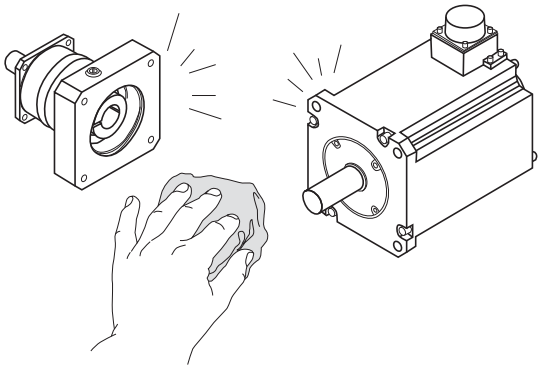

1. Wipe off anti-rust agent and oil on the motor shaft.

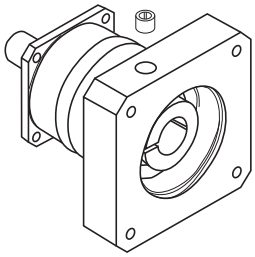

2. Remove the plug.

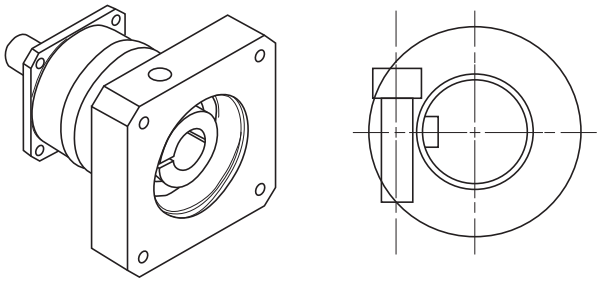

3. Turn the input shaft until the cap screw is seen. Make sure the cap screw is loosened. Place reducer vertically on the flat surface so the motor mounting part faces up.

   NOTE: In case the bushing has been attached, see reducer drawing example below to fix.

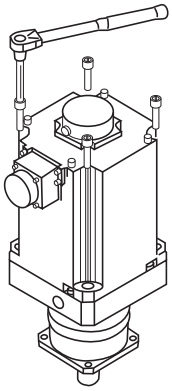

4. Carefully and gently insert the motor shaft into the input shaft. Make sure the motor flange is perfectly fit to the reducer's flange. Tighten the motor by installing and tightening bolts to the proper torque. (See table 1)

Reducer Installation

After confirming the installation surface is flat and clean, tighten the bolt using a torque wrench to the proper torque. (See table 2)

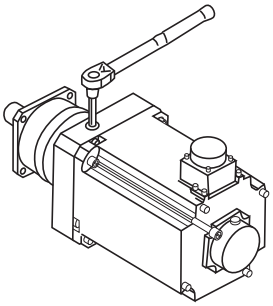

5. Tighten the clamping bolt of the input shaft with torque wrench to the proper torque. (See table 1)

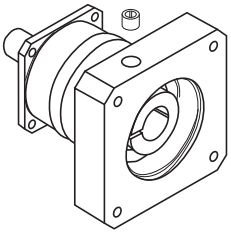

6. Reinstall the plug. The procedure is complete.

Table 1

Bolt Size	Motor Installing Bolts		Clamping Bolts	
	Nm	kgfm	Nm	kgfm
M3	1.1	0.11	1.9	0.18
M4	2.5	0.26	4.3	0.44
M5	5.1	0.52	8.7	0.89
M6	8.7	0.89	15	1.5
M8	21	2.1	36	3.7
M10	42	4.3	71	7.2
M12	72	7.3	125	13
M16	134	14	--	--

Table 2

Bolt Size	Tightening Torque	
	Nm	kgfm
M3	1.9	0.18
M4	4.3	0.44
M5	8.7	0.89
M6	15	1.5
M8	36	3.7
M10	71	7.2
M12	125	13
M16	310	32
M20	603	62

** Recommended bolt: Strength 12.9*

Cautions for Operation

■ When the reducer is delivered to you, confirm that you received the exact model that you ordered.
Please wipe out the input and output shaft of the reducer which is covered by anti-corrosive oil.
* Remove rubber cap on the input shaft before you wipe the shafts.
* Lubricant (grease) is already filled in the reducer. The reducer is ready for operation out of the box.

Fixation and Installation

■ Avoid use in places where rain or water drops directly, unless special wash down design.
▪ In case of use outdoors or in a places where dust and water drops directly, consult SHIMPO in advance.
■ Install at 0°~40°C of surrounding temperature.
▪ In case of use at temperature out of the mentioned (0°~40°C) range, consult SHIMPO in advance.
■ Firmly fix with a bolt onto a solid stand without vibration.
■ Install in a convenient location for future repair and inspection.

Cautions Prior to Starting the Operation

■ Reducer can be used on arrival, since it has already been filled with lubrication.
■ At initial operation, check the rotating direction of the output shaft and then gradually apply load.

Cautions During Operation

■ Avoid overload.
■ Ensure that input speed shall not exceed the number of maximum revolutions per minute specified.
■ In the event the following occurs, stop the operation and check the following points:
▪ If temperature sharply increases
▪ If an abnormal noise appears sharply
▪ If the number of revolutions becomes unstable sharply
■ In the event the following occurs, respond immediately to the issue or contact us as soon as possible.
▪ Is it under overload condition?
▪ Is lubricant insufficient or deteriorated, or was another lubricant applied?
▪ Is the axis, gear, and/or motor input damaged?
▪ Are any connections unstable?

Disassembly

■ ABLE REDUCER is designed to not be disassembled.

Lubricant Use

■ The ABLE REDUCER is of grease-seal type in all models.
A specified amount of grease is filled at factory release so you can use as soon as it is delivered to you.
■ It is impossible to exchange grease.
■ In case of use outside of the recommended temperature range, consult SHIMPO in advance.

Daily Check Points

■ Is the reducer case temperature excessively high during operation? (Up to + 50°C is not significant.)
■ Is there an abnormal noise in the bearing, gear, etc?
■ Is there an abnormal vibration in the reducer?
* Upon an abnormal phenomenon, immediately stop the operation and contact us.
■ Is there a lubricant leak?

Periodic Check Points

■ Are there overload and abnormal rotation?
■ Are free, sprocket, and reducer assembling bolts loose?
■ Is there an abnormal condition in the electric system?
■ Checkup and repair of major parts
* Upon an abnormal condition, immediately stop the operation and contact us.
■ Oil leak
* Upon an oil leak, contact us.

Scrapping

Whenever scrapping the ABLE REDUCER, classify the parts by material into industrial wastes as specified in the laws and regulations of your local government. Materials of construction can be divided into the following four categories:

1. Rubber parts: Oil seal, seat packing, rubber cap, seal used for bearing on the motor flange, etc.
2. Aluminum parts: Motor flange, output shaft holder
3. Grease: Wipe off the grease from the individual parts with dry cloth and scrap into oils.
4. Iron parts: Parts other than those mentioned in the above

Adapter Flange Codes

These tables provide an explanation for the adapter codes. The tables start with Input Bore measurement and the Part # Code, which are indicated at the end of every model code. For each Part # Code, the Pilot**,** PCD, Tapped Hole, and Pilot Depth, are explained.

Please note that even though the Part# Code may have the same letters (i.e. DC, FB, HA, etc), the Pilot and PCD dimensions may not be the same if a different input bore diameter. Locate the table by input bore diameter first, and then find the appropriate adapter Part# Code to check the dimensions. If you have any questions, contact NIDEC-SHIMPO for support.

Input Bore (mm)	Part# Code	Pilot (mm)	PCD (mm)	Tapped Hole	Pilot Depth (mm)
65	MA	114.3	200	M12	8
65	MB	200	235	M12	8
65	MC	180	215	M12	8
65	MD	180	265	M12	8
65	NA	230	265	M12	8
65	NB	230	265	M12	18
65	NC	230	290	M12	8
65	ND	230	265	M20	18
65	PA	250	300	M16	8
65	PB	250	320	M16	18
65	QA	300	350	M16	8
65	QB	280	325	M16	8

Input Bore (mm)	Part# Code	Pilot (mm)	PCD (mm)	Tapped Hole	Pilot Depth (mm)
48	KA	114.3	200	M12	8
48	KB	110	130	8.8	8
48	KC	130	215	M12	8
48	LA	180	215	M12	8
48	MA	180	265	M12	8
48	MB	200	235	M12	8
48	NA	230	265	M12	8
48	PA	250	300	M16	8

Input Bore (mm)	Part# Code	Pilot (mm)	PCD (mm)	Tapped Hole	Pilot Depth (mm)
38	HA	110	130	8.8	8
38	HB	110	145	M8	8
38	HE	110	130	M8	8
38	JA	130	165	M10	8
38	KA	114.3	200	M12	8
38	KB	130	215	M10	8
38	KC	130	215	M12	8
38	KD	95	200	M10	18
38	KE	114.3	200	M12	18
38	LA	180	215	M12	8
38	LB	180	215	M12	18
38	MA	180	265	M12	8
38	MB	200	235	M12	8
38	MC	215.9	184.15	13.7	5.5
38	MD	200	250	M8	18
38	NA	230	265	M12	8

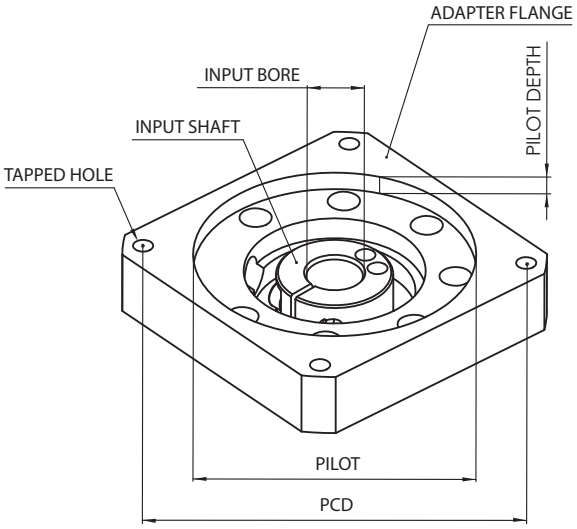

Adapter Flange Codes

Input Bore (mm)	Part# Code	Pilot (mm)	PCD (mm)	Tapped Hole	Pilot Depth (mm)
28	FA	80	100	M6	8
28	FB	95	115	M6	8
28	FC	95	115	M8	8
28	FD	95	115	M6	8
28	FE	95	115	M8	8
28	GA	55.563	125.73	M6	8
28	GB	63.5	127	M6	8
28	GC	95	130	M8	8
28	GD	110	130	M8	8
28	GE	110	130	M10	8
28	GF	110	130	8.8	8
28	GG	110	135	M8	8
28	GH	95	135	M8	8
28	HA	110	145	M8	8
28	HB	110	145	M8	18
28	HC	110	145	10.5	8
28	HD	114.3	149.23	10.5	8
28	HE	95	145	M8	18
28	HF	110	145	M8	8
28	JA	110	165	M8	8
28	JB	110	165	M10	8
28	JC	130	165	M10	8
28	JD	130	174	M10	28
28	JE	130	165	M10	18
28	JF	114.3	160	M10	8
28	KA	114.3	200	M12	8
28	KB	130	215	M10	8
28	KD	114.3	200	M12	18
28	KE	150	185	M10	8
28	LA	180	215	M12	8
28	LB	180	220	M12	18
28	MA	200	235	M12	8
28	MB	200	250	M8	18

Input Bore (mm)	Part# Code	Pilot (mm)	PCD (mm)	Tapped Hole	Pilot Depth (mm)
19	DA	60	90	M5	6
19	DB	70	90	M5	6
19	DC	70	90	M6	6
19	DD	70	90	M6	16
19	DE	70	90	M5	11
19	EA	73.025	98.43	M5	11
19	EB	80	100	M6	6
19	EC	80	100	M6	16
19	ED	60	98.99	M6	6
19	FA	95	115	M8	6
19	FB	95	115	M8	16
19	GA	55.563	125.73	M6	11
19	GB	95	130	M8	6
19	GC	110	130	M8	11
19	GD	110	130	8.8	6
19	GE	95	130	M8	16
19	GF	100	125	M8	16
19	GH	95	135	M8	11
19	HA	110	145	M8	6
19	HB	110	145	M8	21
19	HC	110	145	10.5	11
19	HD	114.3	149.23	M8	11
19	HE	114.3	149.23	10.5	11
19	JA	130	165	M10	16
19	JB	115	165	M8	21

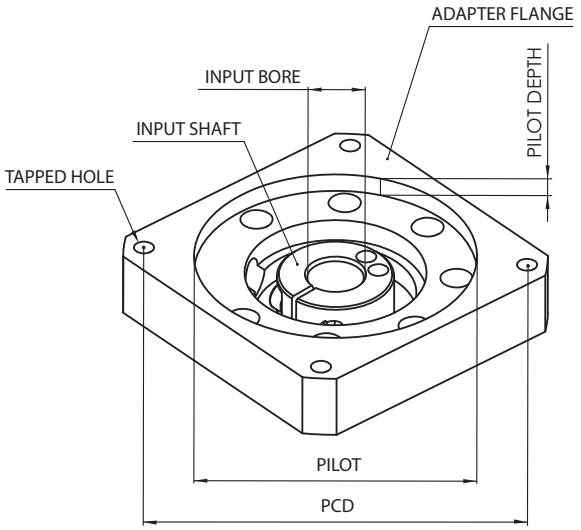

Adapter Flange Codes

These tables provide an explanation for the adapter codes. The tables start with Input Bore measurement and the Part # Code, which are indicated at the end of every model code. For each Part # Code, the Pilot**,** PCD, Tapped Hole, and Pilot Depth, are explained.

Please note that even though the Part# Code may have the same letters (i.e. DC, FB, HA, etc), the Pilot and PCD dimensions may not be the same if a different input bore diameter. Locate the table by input bore diameter first, and then find the appropriate adapter Part# Code to check the dimensions. If you have any questions, contact NIDEC-SHIMPO for support.

Input Bore (mm)	Part# Code	Pilot (mm)	PCD (mm)	Tapped Hole	Pilot Depth (mm)
14	BA	38.1	66.68	M4	5
14	BB	38.1	66.68	M5	5
14	BC	38.1	66.68	M5	10
14	BD	40	63	M4	5
14	BE	40	63	M5	5
14	BF	40	65	M5	5
14	BG	40	70	M4	5
14	BH	50	60	M4	10
14	BJ	50	70	M4	5
14	BK	50	70	M5	5
14	BL	50	70	M5	15
14	BM	50	70	M5	10
14	BN	50	70	M4	10
14	BP	36	70.71	M4	5
14	CA	60	75	M5	5
14	CB	60	75	M6	10
14	CC	60	80	M4	5
14	DA	50	95	M6	5
14	DB	60	85	M5	5
14	DC	60	90	M5	5
14	DD	70	85	6.5	5
14	DE	70	90	M5	10
14	DF	70	90	M6	5

Input Bore (mm)	Part# Code	Pilot (mm)	PCD (mm)	Tapped Hole	Pilot Depth (mm)
14	DG	70	90	M6	15
14	DH	70	95	M6	5
14	DJ	60	95	M5	5
14	DK	36.8	82.024	M6	15
14	DL	62	91.924	M5	10
14	EA	50	100	M6	5
14	EB	73.025	98.43	M5	5
14	EC	80	100	M6	5
14	ED	80	100	M6	15
14	EE	73.025	98.43	M6	15
14	EF	50	98.43	M5	5
14	EG	60	98.995	M5	5
14	EH	80	105	M6	15
14	EJ	60	98.995	M6	10
14	EK	73.025	98.43	M6	5
14	EL	73	94	M6	5
14	EM	83	104	M8	10
14	FA	60	115	M6	5
14	FB	95	115	M8	15
14	GA	80	139.7	M6	5
14	GB	80	130	M5	20
14	GC	94	120	M8	10
14	JA	115	165	M8	10

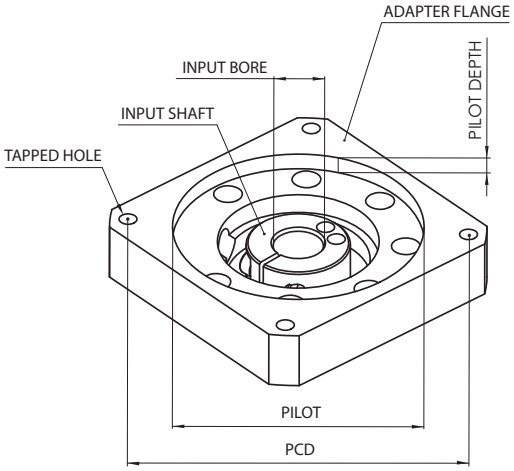

Adapter Flange Codes

Input Bore (mm)	Part# Code	Pilot (mm)	PCD (mm)	Tapped Hole	Pilot Depth (mm)
8	AA	20.02	46.69	M3	5
8	AB	22	43.82	4.7	10
8	AC	22	48	M3	5
8	AD	22.22	50.8	M3	5
8	AE	25.4	38.89	4	10
8	AF	30	45	M3	5
8	AG	30	46	M4	5
8	AH	30	46	M4	10
8	AJ	30	46	3.5	10
8	AK	34	48	M3	10
8	AL	30	48	M3	5
8	AM	22	43.82	3.5	5
8	AN	40	50	M4	5
8	AQ	37.6	48	M3	5
8	BA	38.1	66.68	M4	5
8	BB	38.1	66.68	M5	5
8	BC	50	60	M4	10
8	BD	50	70	M4	5
8	BE	50	70	M5	5
8	BF	50	70	M5	10
8	BG	36	70.71	M4	5
8	BH	54	70	M4	5
8	BJ	50	58	M3	5
8	CA	50	80	M4	10

Input Bore (mm)	Part# Code	Pilot (mm)	PCD (mm)	Tapped Hole	Pilot Depth (mm)
S8	ZA	20.02	46.69	M3	5
S8	ZB	22	43.82	4.7	10
S8	ZC	22	48	M3	5
S8	ZD	22.22	50.8	M3	5
S8	ZE	25.4	38.89	4	10
S8	ZF	30	45	M3	5
S8	ZG	30	46	M4	5
S8	ZH	30	46	M4	10
S8	ZJ	30	46	3.5	10
S8	ZK	34	48	M3	10
S8	ZL	30	48	M3	5
S8	ZM	22	43.82	3.5	5
S8	ZN	40	50	M4	5
S8	ZQ	37.6	48	M3	5
S8	BA	38.1	66.68	M4	5
S8	BB	38.1	66.68	M5	5
S8	BC	50	60	M4	10
S8	BD	50	70	M4	5
S8	BE	50	70	M5	5
S8	BF	50	70	M5	10
S8	BG	36	70.71	M4	5
S8	BH	54	70	M4	5
S8	BJ	50	58	M3	5

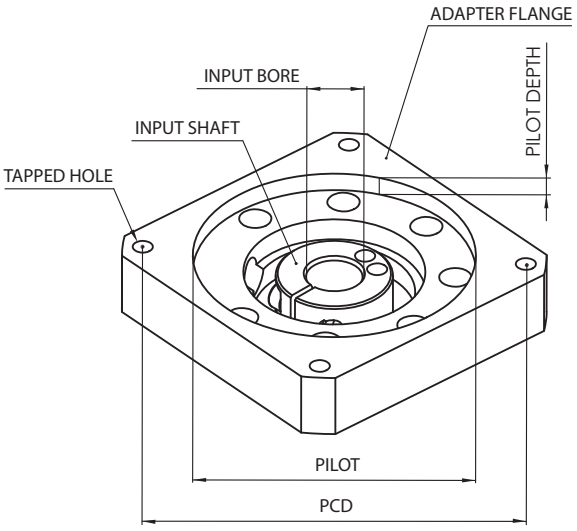

Procedure for Gear Reducer Selection

Determine Type of Move and Profile Requirements

Trapezoidal Move

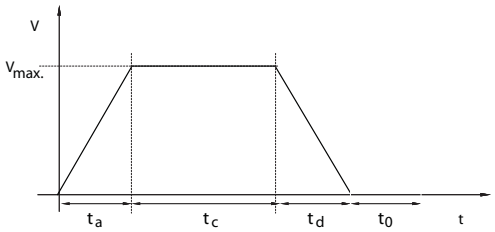

Picture 3.2.2.1: Trapezoidal Motion Profile

Symbol	Description
v	Velocity
v_{max}	Maximum Velocity
t	Time
t_c	Constant Time
t_a	Acceleration Time
t_d	Deceleration Time
t_0	Dwell Time (Time at zero speed)

Triangular Move

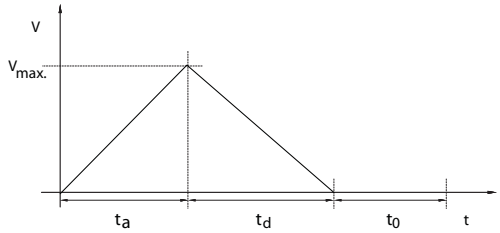

Picture 3.2.1.1: Triangular Motion Profile

Symbol	Description
v	Velocity
v_{max}	Maximum Velocity
t	Time
t_a	Acceleration Time
t_d	Deceleration Time
t_0	Dwell Time (Time at zero speed)

Look up Data in Catalog: Blue text | **Calculate: Red text**

Select a Preliminary Frame Size & Series

Calculate / Compare
Max Operated Radial Load / Permitted Radial Load & Max Operated Axial Load / Permitted Axial Load

Max Operated Radial Load (N): $Fr_{MAX\text{-}O}$ = Max of Fr_{O1}, Fr_{O2}, · · · Fr_{On}
Permitted Radial Load (N): $Fr_{MAX\text{-}P}$

Max Operated Axial Load (N): $Fa_{MAX\text{-}O}$ = Max of Fa_{O1}, Fa_{O2}, · · · Fa_{On}
Permitted Axial Load (N): $Fa_{MAX\text{-}P}$

[$Fr_{MAX\text{-}P} \geqq Fr_{MAX\text{-}O}$] — FALSE

[$Fa_{MAX\text{-}P} \geqq Fa_{MAX\text{-}O}$] — FALSE

TRUE

Calculate: Max Operated Output Torque & Max Operated Output Speed

Max Operated Output Speed (rpm): $no_{MAX\text{-}O}$ = Max of no_{O1}, no_{O2}, · · · no_{On}
Max Operated Output Torque (rpm): $To_{MAX\text{-}O}$ = Max of To_{O1}, To_{O2}, · · · To_{On}

Select: Preliminary Reduction Ratio (R)
Calculate: Max Operated Input Speed (niMAX-O)

$ni_{MAX\text{-}O} = no_{MAX\text{-}O} \times R$

Compare Input Speed — FALSE

[$ni_{MAX\text{-}P} \geqq ni_{MAX\text{-}O}$]

Compare the Max Permitted Input Speed ($ni_{MAX\text{-}P}$) to the Max Operated Input Speed ($ni_{MAX\text{-}O}$)

TRUE

Compare Output Torque — FALSE

[$To_{MAX\text{-}P} \geqq To_{MAX\text{-}O}$]

Compare the Max Permitted Output Torque ($To_{MAX\text{-}P}$) to the Max Operated Output Torque ($To_{MAX\text{-}O}$)

Calculate: Average Operated Radial Load & Average Operated Axial Load

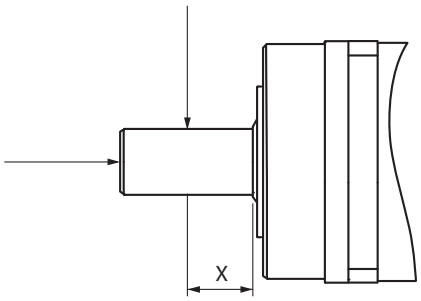

Average Operated Radial Load (N):

$$Fr_{AVG-O} = \sqrt[3]{\frac{no_{O1} \cdot t_1 \cdot |Fr_{O1}|^3 + no_{O2} \cdot t_2 \cdot |Fr_{O2}|^3 + \cdots + no_{On} \cdot t_n \cdot |Fr_{On}|^3}{no_{O1} \cdot t_1 + no_{O2} \cdot t_2 + \cdots + no_{On} \cdot t_n}}$$

Average Operated Axial Load (N):

$$Fa_{AVG-O} = \sqrt[3]{\frac{no_{O1} \cdot t_1 \cdot |Ft_{O1}|^3 + no_{O2} \cdot t_2 \cdot |Ft_{O2}|^3 + \cdots + no_{On} \cdot t_n \cdot |Ft_{On}|^3}{no_{O1} \cdot t_1 + no_{O2} \cdot t_2 + \cdots + no_{On} \cdot t_n}}$$

Calculate: Average Operated Output Torque & Average Operated Output Speed

Average Operated Output Torque (Nm):

$$To_{AVG-O} = \sqrt[10/3]{\frac{no_{O_1} \cdot to_1 \cdot |To_{O_1}|^{10/3} + no_{O2} \cdot to_2 \cdot |To_{O2}|^{10/3} + \cdots + no_{On} \cdot to_n \cdot |To_{On}|^{10/3}}{no_{O1} \cdot to_1 + no_{O2} \cdot to_2 \cdots no_{On} \cdot to_n}}$$

Average Operated Output Speed (rpm):

$$no_{AVG-O} = \frac{no_{O1} \cdot to_1 + no_{O2} \cdot to_2 \cdots no_{On} \cdot to_n}{to_1 + to_2 + \cdots + to_n}$$

Calculate: Life

Bearing Life (Hours): $Lh = 20{,}000 \bullet \left(\frac{To_{AVG-P}}{To_{AVG-O}}\right)^P \bullet \left(\frac{ni_{AVG-P}}{no_{AVG-O}}\right)$

To_{AVG-P}: Average Permitted Output Torque

To_{AVG-O}: Average Operated Output Torque

ni_{AVG-P}: Average Permitted Input Speed

no_{AVG-O}: Average Operated Output Speed

There are 3 Life calculations that should be taken into account:

1. Life of Needle Bearing
2. Life Due to Radial Load
3. Life Due to Thrust Load

Contact Shimpo for calculation details

Increase One Frame Size

Lh ≧ **Required Life**

FALSE

TRUE

Ensure Proper Fit between Gear Reducer and Motor

Gear Reducer Selection Complete

Contact NIDEC-SHIMPO for questions at (800) 842-1479

Online Sizing and Selection Tool

SHIMPO's online Selection Tool offers additional information that exceeds this catalog. The online Selection Tool has an extensive list of Servo Motor Specifications, Requirements and Application Specifications. See the Selection Tool example screens below to guide, support and help you with your application needs.

Selection Tool Screen Example 1

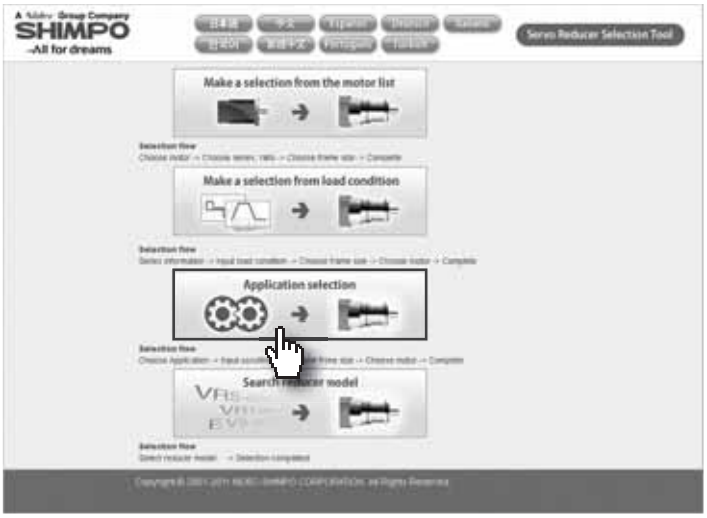

- Selection based on the Servo Motor Specifications
- Selection based on the Servo Motor Movement profile requirements
- Selection based on the Application Specifications includes all the above

Selection Tool Screen Example 2

- Select a application template based on your criteria

Selection Tool Screen Example 3

- Fill in all the information for your application

Load condition			
Delivery weight	Ww	10	(kg)
Belt weight	Wc	1	(kg)

- Including the velocity, forces, mass, and move profile

Selection Tool Screen Example 4

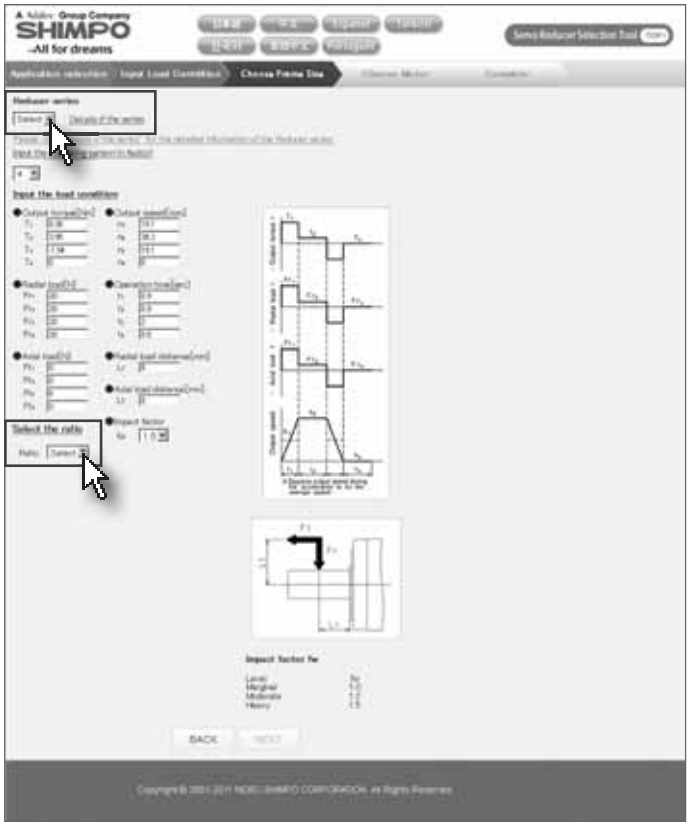

- Select a SHIMPO Reducer Series
- Select a Ratio that would put you near the rpm range for your application

Selection Tool Screen Example 5

- The proper SHIMPO reducer frame size has been selected based on your application's criteria

Selection Tool Screen Example 6

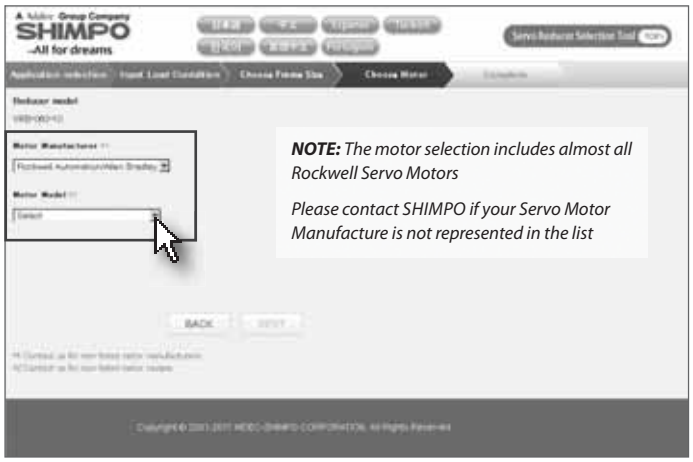

- Select the Motor Manufacturer for your application from the list
- Select the appropriate motor via the "Motor Model drop down box"
- The manufacture Motor Model list includes new and former servo motors
- The sizing program does not select the servo motor drive

Selection Tool Screen Example 7

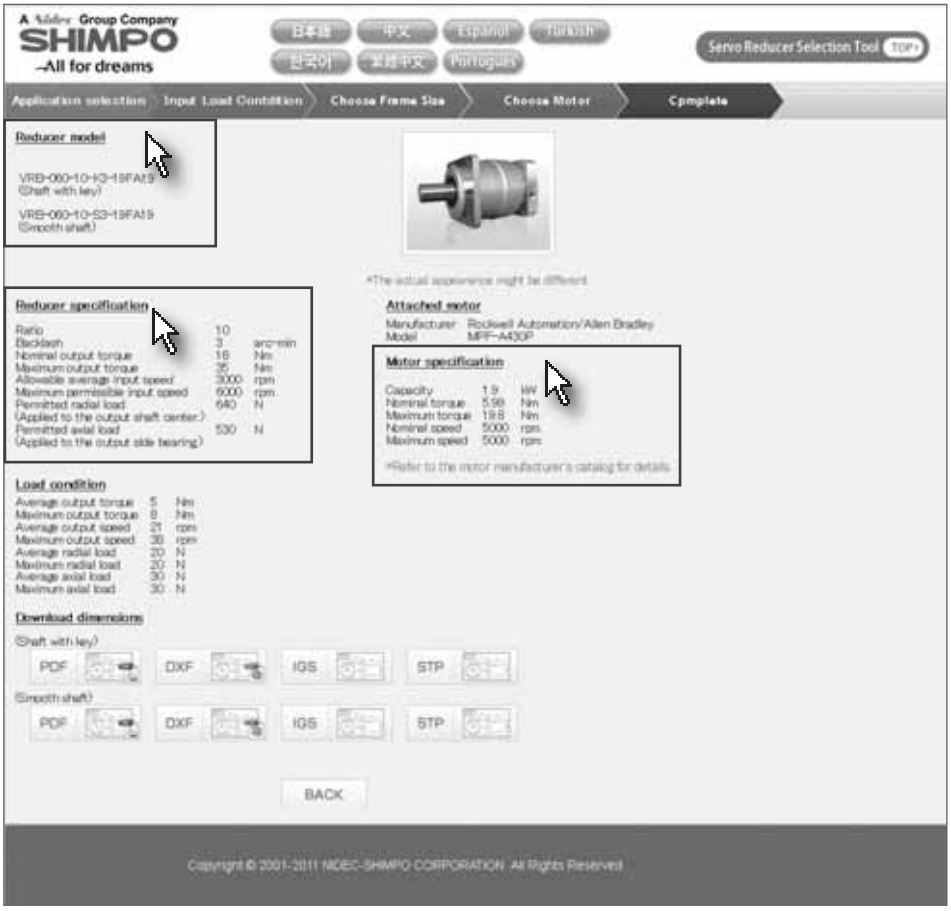

The resulting Load Condition can be helpful for sizing other related machine components

The Load Condition includes:

- Output Torque (Nm) and Output Velocity (rpm) of the Gearmotor

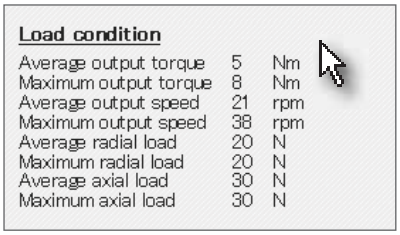

- These drawing formats can be downloaded: PDF, DXF, IGS, STP

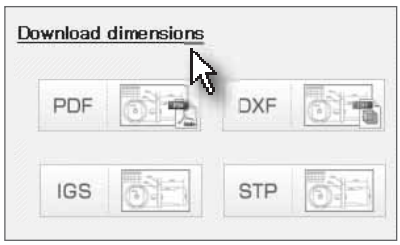

Selection tool www.nidec-shimpo.co.jp/selection/eng

Commercial Information

Customer Service and Support 432

Warranty 433

Standard Terms and Conditions 434-435

Locations and Contact Information 440

Customer Service and Support

Distinction in Service and Support

NIDEC-SHIMPO has invested heavily in the past few years in building a global customer service and application support network that will meet the evolving needs of our customers. By leveraging our global infrastructure, our OEM customers maintain their competitiveness and profitability at home while able to expand into emerging markets abroad without any drop-off of service and support.

NIDEC-SHIMPO pledges that we will continue to expand our service and support network footprint globally, and continuously strive for perfection as a dependable partner to our customers. In this section you will learn about our service and support capabilities that we will leverage in order to provide you peace of mind.

Online and Phone Support

Resolve your technical issues quickly and accurately, without disrupting your business. With the NIDEC-SHIMPO OEM Partner Service Program, your company and your customers have immediate access to our global network of support centers and resources. Whether you need help designing, installing, and maintaining equipment or diagnosing an operating issue, NIDEC-SHIMPO will deliver the tools and information that you need in order to insure that your equipment is running to perfection.

Contact your local sales office for immediate support either over the phone or in the field. A list of locations can be found on the back cover of this catalog. All OEM accounts in North America have a dedicated Technical Support Engineer, knowledgeable about your business, on-standby ready to support you and your customers. If you do not know who to contact, please call our 1-800 number in order to get properly directed to the right person for help.

For online support, please visit our website in order to download any drawings, instruction manuals, or technical performance specifications that you require. All catalogs and brochures will also be easily downloadable on the website. If you prefer to inquire about an issue or for more information, please do not hesitate to submit your request online or start a dialogue with our Info address.

Training Services

Investing our time in you, so together we build better, more competitive product for your customer. As the industrial world becomes increasingly competitive, new technologies are introduced every year requiring manufacturers to constantly rationalize and update existing designs. As a result, successful manufacturers realize the absolute need for product training.

NIDEC-SHIMPO has a network of engineers that are factory trained and authorized to provide your workforce solid training on our products and basic power transmission concepts. The main objective of our standard program and materials is to better empower your workforce to size and select gear reducers and motors for any motion control applications. We provide this service at no cost to our customers, because we see the value in building a more knowledgeable customer and helping them more quickly react to equipment design revisions when needed.

Some other gear reducer manufacturers are not as forthcoming with sharing information with their customers, an attempt to hide their higher manufacturing costs or to use unreleased performance data as a "product differentiator". NIDEC-SHIMPO views their customers as a long-term partnership, and we train and share information with our customers freely based on that vision.

Training classes can be conducted online, at any of our sales branches or offices, or at key distributor branches when requested. NIDEC-SHIMPO can also bring the training session to your facility in order to make better use of your time and costs. A thorough hands-on training seminar can be provided at our Itasca, IL build facility, where customers can get the opportunity to completely assemble and test one of our Able units.

The NIDEC-SHIMPO training program options provide support for any budget. Our training programs improve your employees' skill and knowledge competencies in the areas of power transmission and motion control while addressing any location, time, travel and productivity constraints. Contact your local sales office today in order to get a power transmission refresher on your calendar.

NIDEC-SHIMPO Hotline:

Toll-free: (800) 842-1479
Email: info@shimpodrives.com

The NIDEC-SHIMPO 5–Year Warranty

1. **STANDARD WARRANTY**. With the exception of shaft seals, which is a normal wear item, Seller warrants that the products manufactured by the Seller to be free from defects in materials and workmanship under normal use and proper maintenance for:

High Precision Products (includes VR, EV, EJ, ST Series)	**5-years**
RXC sizes 02 – 90 (excluding electrical products)	2-years
RXC sizes 91 – 98 (excluding electrical products)	1-year
Circulute® Reducers	2-years
Electrical Products	1-year

a. If within such period any product shall be proved to the Seller's reasonable satisfaction to be defective, such product shall be repaired or replaced at our option. The Seller's obligation and Buyer's exclusive remedy will be limited to such repair or replacement and shall be conditioned upon the Seller receiving written notice of any alleged defect no later than thirty (30) days after its discovery within the warranty period.

b. Shipping terms for any repaired or replaced product will be FOB shipping point unless negotiated otherwise. If necessary, Seller reserves the right to inspect the product claimed to be defective at Buyer's location or place of installation. Travel time and expenses for any Seller service personnel provided to Buyer's premises to affect such repair or replacement will be at the Buyer's expense. Seller reserves the right to satisfy our warranty obligation in full by reimbursing the Buyer for all payments made to Seller and Buyer shall thereupon return the product to Seller.

c. These warranties shall not be effective if the product has been subject to overload, misuse, negligence, or accident, or if the product has been repaired or altered outside of Seller's factory or authorized control in any respect which, in our judgment, adversely affects its condition or operation. Buyer shall establish, to our satisfaction, that the product has at all times, been properly assembled, installed, serviced, maintained, tested, operated and used in accordance with the current maintenance and operating instructions of Seller and has not been altered or modified in any manner without our prior written consent.

d. The Seller's warranty obligation shall not be effective for components or products hereunder where the product 1) is consumed by normal wear and tear, 2) is consumed by an application that was above the rated capacity, and 3) has a normal life that is fundamentally shorter in the length of time than the standard warranty as outlined, hereunder.

e. No extended warranty will be offered on wear items unless otherwise agreed to in writing by NIDEC-SHIMPO management at the time of the sale.

f. Descriptions or representations of the products provided by the Seller's employees, sales representatives, and distributors, regardless written or verbal, should not be construed as an expressed or implied warranty that would supersede any element of this standard warranty. Expressed or implied warranties are acceptable but only on a case-by-case basis as determined necessary by the Seller. A separate expressed or implied warranty must be provided in writing and confirmed by NIDEC-SHIMPO management in order to be valid at the time of sale.

g. THE STANDARD WARRANTY AS DESCRIBED HEREIN SHALL BE IN LIEU OF ALL OTHER WARRANTIES EXPRESSED OR IMPLIED RELATED TO THE SELLER'S PRODUCTS, INCLUDING ALL IMPLIED WARRANTIES OF MERCHANTABILITY OR FITNESS, AND SHALL BE IN LIEU OF ANY OBLIGATIONS OR LIABILITY ON THE SELLER'S BEHALF.

Standard Terms and Conditions

STANDARD TERMS AND CONDITIONS

1. **SHIPPING AND PAYMENT TERMS**. Unless otherwise specified, shipping terms are FOB shipping point, and payment terms are net 30 days. All payments are to be made in United States funds.

2. **TAXES AND SECURITY INTEREST**. Unless otherwise specified, the prices stated do not include any taxes which may now or hereafter be applicable to the products or performance of any services by Seller. Buyer agrees to pay or reimburse Seller for any such required taxes and all connected penalties and interests, or in lieu thereof, Buyer shall provide Seller with tax exemption documents acceptable to the taxing authorities involved. Buyer, by acceptance of the goods ordered, represents and warrants that Buyer is solvent and able to pay for the goods in accordance with the terms of sale. As security for payment of the purchase price for the products and all other amounts due from the Buyer under these Terms, Buyer hereby grants Seller a security interest in the products and agrees to execute and permit Seller to file and record all documents which may be requested by Seller in order to create, perfect, evidence and establish the foregoing security interest. If Buyer fails to pay any amount when due, or, prior to payment of all amounts due, removes all or any part of the products from Buyer's premises, we shall exercise any or all of the rights and remedies given to secured parties under the UCC of the State of Illinois, and under similar laws of any other state, if applicable.

3. **RETURN GOODS**. No product will be accepted for return unless authorized with appropriate returned goods number assigned. In all cases, freight charges must be prepaid. Buyer will be responsible for any damages incurred in transit to goods being returned. Title shall pass to Seller upon Seller's acceptance of return goods.

4. **CANCELLATION**. Terms, once accepted and approved by Seller, shall not be canceled or altered by Buyer, and Buyer shall not otherwise cause the work or shipment to be delayed, except with the consent of and upon the terms and conditions approved by Seller in writing. Orders canceled or suspended with our consent are subject to cancellation and/ or other charges as determined by Seller.

5. **DELAY IN DELIVERIES**. In no event shall Seller be liable for nondelivery or delays in delivery of products, or in the performance of any other obligations, arising directly or indirectly from acts of God, acts (including delay or failure to act) of any governmental authority (de jure or de facto), war (declared or undeclared), riot, fires, floods, weather, labor disputes, sabotage, epidemics, factory shutdowns or alterations, embargoes, delays, shortages or inability to procure transportation, labor, manufacturing facilities or materials, failure to obtain timely instructions or information from Buyer, or inability due to causes of any other kind beyond our control. The foregoing provisions shall apply even though such cause may occur after performance of our obligations has been delayed for other causes.

6. **INDEMNIFICATION**. Buyer shall notify Seller promptly in writing and in all events within ten (10) days after its occurrence, of any accident or malfunction involving the products which results in injury to or death of any persons, property damage or economic loss of any kind, and Buyer shall cooperate fully with Seller in investigating and determining the cause of any such accident or malfunction. Buyer further agrees to indemnify and hold Seller harmless from and against all claims and damages imposed upon Seller or incurred arising, directly or indirectly, from Buyer's failure to perform or satisfy any of the Terms described herein.

7. **GENERAL PROVISIONS**. These Terms shall be governed, construed and enforced in accordance with the laws of the State of Illinois, and shall be binding upon and inure to the benefit of any successors, assigns, and legal Distributors of Seller and Buyer. The Terms are not assignable without Seller's prior written approval. A judicial or administrative declaration in any jurisdiction of the invalidity of any one or more of the provisions of the Terms in any jurisdiction, nor shall such declaration have any effect on the validity of interpretation of the Terms outside that jurisdiction.

8. **MINIMUM ORDER CHARGE**. The minimum charge on an order will be $60.00.
9. **BOXING ORDER CHARGE**. No charge is made for standard boxing or crating required by transportation companies for domestic shipments. Cost of special boxing, export boxing, cartage to steamer or transfer expenses will be added to the invoice unless charges are shown to be included in the prices.

Any and all Terms are subject to change prior to Buyer's acceptance of these Terms.

PROPERTY AND PATENT RIGHTS

1. Seller retains for itself any and all property rights, including but not limited to all patent, copyright, and trade secret rights, to any software materials and to all designs, engineering details, documentation, and other data pertaining to any product designed in connection herewith and to all right of discovery, invention or patent rights arising out of the work done in connection herewith. Buyer expressly agrees that it will not assert any property rights herein, except the right for itself and subsequent owners to use the product.
2. Buyer acknowledges that any software materials constitute valuable trade secrets of Seller and are unpublished works on which Seller holds the sole and exclusive copyright. Buyer agrees to maintain and protect the confidentiality of these trade secrets and agrees not to disclose them or use them for any purpose not contemplated by this Agreement. Buyer agrees to formulate and adopt appropriate safeguards in light of its own operating activities, to insure protection of the confidentiality of these trade secrets. Buyer shall immediately notify Seller of any information which comes to its attention which indicates that there has been any loss of confidentiality of Seller trade secret information.

SUBMISSION AND ACCEPTANCE OF ORDERS

1. All orders and contracts are subject to acceptance or rejection by an officer of Seller or any individual authorized by Seller in writing , at the main offices of Seller, which approval or rejection shall in all cases be in writing to the Buyer, and no order or contract shall be binding until so accepted. Seller reserves the right to refuse any business originating in the Territory of the Buyer, for any reason which in the considered judgment of Seller is sufficient grounds for refusal.
2. On orders and contracts of a deferred-payment nature, all such payment and credit extensions are subject to final review and approval by Seller. Seller may accept such orders or contracts, withhold shipment after initial acceptance if for any reason the Buyer's credit has become impaired.

SHIPMENTS AND SHIPPING INFORMATION

1. All shipments, from whatever source, shall be contingent upon prior approval of the order or contract by Seller, and after such prior approval, upon the effect of strikes, accidents, embargoes, priorities, or any cause natural or otherwise, beyond the control of this Seller. Seller, in effect, assumes no liability hereunder for its failure to make shipment on any order or contract.
2. All Products are prepared by Seller for North American land shipment only under this Agreement. Any special preparations, for water shipment or foreign trade outside of the North Americas, must be arranged for as a special consideration.

Graph Template

Graph Template

Locations and Contact Information

Americas

NIDEC-SHIMPO AMERICA CORPORATION
1701 Glenlake Avenue
Itasca, IL 60143 USA

Sales & Customer Service
Engineering & Product Support

Toll-free: (800) 842-1479
Local: (630) 924-7138
Fax: (630) 924-7382

info@shimpodrives.com
www.drives.nidec-shimpo.com

NIDEC-SHIMPO MEXICO
Blvd. Carlos Salinas de Gortari
km. 9.5 Apodaca
Nuevo León. 66600. México

NIDEC-SHIMPO MEXICO
Parque Industrial El Marques
Circuito El Marques
Sur #12 Local 13
Mpio. El Marques Querétaro,
Mexico C.P.72646

NIDEC-SHIMPO BRASIL
Av. Paulista, 2073 - Ed. Horsa II,
17º andar, Conj. 1702
São Paulo - SP, Brasil CEP
01311-000

Asia-Pacific

NIDEC-SHIMPO CORPORATION
Corporate Headquarters
1 Terada, Kohtari
Nagaokakyo-City
Kyoto Japan 617-0833

NIDEC-SHIMPO (ZHEJIANG) CORPORATION
288 Ping Cheng Street
Pinghu Economic
Development Zone
Zhejiang, China

NIDEC-CORPORATION
Corporate Headquarters
338 Tonoshiro-cho
Kuze Minami-ku
Kyoto 601-8205, Japan

NIDEC-SHIMPO (SHANGHAI)
Trading Company Ltd.
Shanghai, China

NIDEC-SHIMPO (KOREA) CORPORATION
Seoul, Korea

NIDEC-SHIMPO (TAIWAN) CORPORATION
Taichung City, China

NIDEC-SHIMPO (HONG KONG) COMPANY, LTD.
Hong Kong, China

NIDEC-SHIMPO (SINGAPORE) CORPORATION
Singapore

NIDEC-SHIMPO INDIA SALES AND TRADING
Bangalore, India

Many other satellite sales office locations throughout Asia-Pacific. Please contact NIDEC-SHIMPO for more information.

SHIMPO's North American headquarters is located in suburban Chicago

www.drives.nidec-shimpo.com

A Nidec Group Company

SHIMPO

NIDEC-SHIMPO
1701 Glenlake Avenue, Itasca, IL 60143 USA
Phone: (800) 842-1479 • Fax: (630) 924-7382

© NIDEC-SHIMPO Product Catalog 2014. All Rights Reserved.